MIAMI COUNTY ONE STOP CENTER

BOARD OF COMMISSIONERS FOR MIAMI COUNTY, OHIO

BARNHART ROAD, TROY, OHIO 45373

ARCHITECT

App Architecture
615 Woodside Drive
Englewood, Ohio 45322
(937) 836-8898

STRUCTURAL ENGINEER

Jezerinac Geers & Associates
5640 Frantz Rd
Dublin, OH 43017
(614) 766-0066

CIVIL ENGINEER

Choice One Engineering
440 E. Hoewisher Rd.
Sidney, OH 45365
(937) 497-0200

MECHANICAL & ELECTRICAL ENGINEERS

Nauman & Zelinski, LLC
204 South Ludlow Street, Suite 400
Dayton, Ohio 45402
(937) 223-3821

DRAWING INDEX

GENERAL

G0.1 COVER SHEET

CIVIL

C0.1 TITLE SHEET
C0.2 GENERAL NOTES
C0.3 GENERAL NOTES
C0.4 GENERAL NOTES
C0.5 GENERAL DETAILS
C0.6 GENERAL DETAILS
C0.7 GENERAL DETAILS
C0.8 GENERAL DETAILS
C0.9 TYPICAL PAVEMENT SECTION
C0.10 FINAL PLAT
C0.11 FINAL PLAT
C1.1 EXISTING TOPO PLAN
C1.2 DIMENSIONING AND PAVEMENT PLAN
C2.1 UTILITY PLAN
C3.1 GRADING PLAN
C3.2 PAVEMENT ELEVATION PLAN
C3.3 INTERSECTION ELEVATION PLAN
C4.1 LANDSCAPE PLAN
C5.1 JAN COURT P-P STA. 10+00 TO STA16+00
C5.2 TRAFFIC CONTROL PLAN
C5.3 VEHICLE TURN TEMPLATE
C5.4 VEHICLE TURN TEMPLATE
C6.1 SWPPP TITLE SHEET
C6.2 SWPPP EROSION CONTROL NOTES AND DETAILS
C6.3 SWPPP EROSION CONTROL NOTES AND DETAILS
C6.4 SWPPP EROSION CONTROL NOTES AND DETAILS
C6.5 SWPPP SITE EROSION CONTROL PLAN

ARCHITECTURAL

AC1.0 SITE PLAN
A0.1 ABBREVIATIONS AND SYMBOLS
A0.2 FINISH SCHEDULES
A0.3 DOOR SCHEDULES
A0.4 WINDOW SCHEDULES
A0.5 WALL TYPES
A0.6 INTERIOR DETAILS
A0.7 DOOR AND WINDOW DETAILS
A0.8 WINDOW DETAILS
A0.9 WINDOW DETAILS
A0.10 OVERHEAD DOOR DETAILS
A1.1 REFERENCE PLAN
A1.2 DIMENSION PLAN
A1.3 ROOF PLAN
A2.1 REFLECTED CEILING PLAN
A3.1 EXTERIOR ELEVATIONS
A3.2 BUILDING SECTIONS
A4.1 WALL SECTIONS
A4.2 WALL SECTIONS
A5.1 EXTERIOR DETAILS
A5.2 ROOF DETAILS
A5.3 ROOF DETAILS
A5.4 DUMPSTER AND SHED DETAILS
A5.5 DUMPSTER GATE DETAILS
A7.1 INTERIOR ELEVATIONS - AUTO TITLE
A7.2 INTERIOR ELEVATIONS - BMV
A7.3 INTERIOR ELEVATIONS - BMV
A7.4 INTERIOR ELEVATIONS - OSP

ARCHITECTURAL

A7.5 INTERIOR ELEVATIONS - OSP
A7.6 INTERIOR ELEVATIONS - DRIVERS EXAM
A7.7 INTERIOR ELEVATIONS - DEPARTMENT OF DEVELOPMENT
A8.1 CASEWORK DETAILS
A8.2 CASEWORK DETAILS
A8.3 CASEWORK DETAILS
A9.1 FINISHES PLAN

STRUCTURAL

S0.1 GENERAL STRUCTURAL INFORMATION
S0.2 STRUCTURAL NOTES & SCHEDULES
S1.1 FOUNDATION PLAN
S2.1 FOUNDATION DETAILS
S2.2 FOUNDATION DETAILS
S3.1 ROOF FRAMING PLAN
S4.1 FRAMING DETAILS
S4.2 FRAMING DETAILS
S4.3 FRAMING DETAILS

FIRE PROTECTION

F0.1 LEGENDS AND SCHEDULES
F1.1 FIRST FLOOR PLAN

PLUMBING

P0.1 LEGENDS AND SCHEDULES
P0.2 SPECIFICATIONS
P0.3 SPECIFICATIONS AND PIPING DETAILS
P1.0 UNDERFLOOR PIPING PLAN
P1.1 FIRST FLOOR PLAN
P1.1G FIRST FLOOR PLAN NATURAL GAS
P1.2 ROOF PLAN
P2.1 DETAILS
P3.1 SOIL, WASTE, AND VENT DIAGRAM

MECHANICAL

H0.1 LEGENDS AND SCHEDULES
H0.2 EQUIPMENT SCHEDULES
H0.3 RTU SCHEDULES & DETAILS
H2.1 FIRST FLOOR PLAN
H2.2 ROOF PLAN
H3.1 SECTIONS
H4.1 DETAILS
H4.2 DUCT DETAILS
H4.3 DUCT SCHEDULES
H5.1 VENTILATION CALCULATIONS

ELECTRICAL

E0.1 LEGENDS AND SCHEDULES
E0.2 SCHEDULES AND SINGLE LINE DIAGRAM
E0.3 DETAILS
E1.1 SITE PLAN
E2.1 LIGHTING PLAN
E3.1 POWER AND SYSTEMS PLAN
E3.2 POWER ROOF PLAN

VICINITY MAP

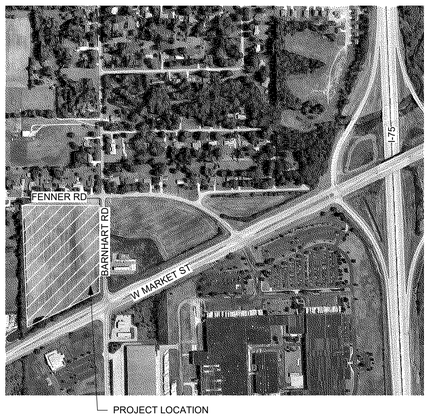

CODE INFORMATION (OBC 2017)

PROJECT DESCRIPTION

PROJECT CONSISTS OF A NEW 16,320 SF ONE STOP CENTER FOR THE BOARD OF COMMISSIONERS FOR MIAMI COUNTY. DEPARTMENTS TO BE LOCATED WITHIN THE CENTER INCLUDE BMV - DEPUTY REGISTRAR, OHIO STATE HIGHWAY PATROL, BMV DRIVER'S EXAM, AUTO TITLE, AND DEPARTMENT OF DEVELOPMENT.

USE GROUP CLASSIFICATION

OBC (302) USE GROUP = B: BUSINESS - CIVIC ADMINISTRATION WITH STATE AGENCIES
S-2: STORAGE - MOTOR VEHICLE PARKING / INSPECTIONS

OBC (508.3) MIXED OCCUPANCIES : NON SEPARATED MIXED USE

CONSTRUCTION TYPE CLASSIFICATION

OBC (602) CONSTRUCTION TYPE = VB

BUILDING DESCRIPTION = CONCRETE SLAB WITH METAL FRAMED LOAD BEARING WALLS, STEEL FRAMING, FIRE-TREATED ROOF TRUSSES, WITH MASONRY VENEER.

HEIGHT AND AREA LIMITATIONS

OBC (503) BUILDING AREA AND HEIGHT ALLOWABLE BASE TABULAR AREA
= B - 3 STORIES/36,000 SF - STORY
= S-2 - 3 STORY/45,000 SF - STORY

B IS MOST RESTRICTIVE USE GROUP AT 36,000 SF ALLOWABLE

BUILDING DESCRIPTION:

FLOOR AREA: FIRST FLOOR = 16,300 SF

OCCUPANT LOAD

OBC (1004) ALLOWABLE
= B : 14,490 SF/100 = 145 OCCUPANTS
= S-2: 1880 SF/200 = 9 OCCUPANTS

DECLARED OCCUPANT LOAD

GROUND FLOOR
= B: 140
= S-2: 8
TOTAL = 148 OCCUPANTS DECLARED

FIRE PROTECTION

BUILDING DESCRIPTION: FULLY SUPPRESSED

CONCEALED SPACES EXCEPTION FOR ATTIC SPACE PER NFPA 13 - 8.15.1.2 "CONCEALED SPACES NOT REQUIRING SPRINKLER PROTECTION" AND 8.15.1.2.11

PLUMBING FIXTURES REQUIRED

USE GROUP	WC	LAVS	SHOWERS	EYEWASH	D.F.	SERVICE SINK
B	3	2	0	0	2	1
S2	1	1	0	0	0	1
TOTAL	4	3	0	0	2	2

PLUMBING FIXTURES PROPOSED

USE GROUP	WC	LAVS	SHOWERS	EYEWASH	D.F.	SERVICE SINK
B	11	9	1	0	2*	2

* THE REQUIREMENT FOR 1 OF 2 REQUIRED DRINKING FOUNTAINS WILL BE MET WITH THE INCLUSION OF 1 REFRIGERATED DRINKING WATER COOLER WITH REPLACEABLE BOTTLES.

App Architecture
creative focused design
615 Woodside Drive, Englewood, Ohio 45322
T 937.836.8898 F 937.832.3696
www.app-arch.com

STATE OF OHIO
TIMOTHY J. BEMENT
12305
REGISTERED ARCHITECT
Timothy J. Bement, License #12305
Expiration Date 12/31/2023

MIAMI COUNTY ONE STOP CENTER
BOARD OF COMMISSIONERS FOR MIAMI COUNTY, OHIO
BARNHART ROAD, TROY, OHIO 45373

ISSUE

NO.	DATE	DESCRIPTION
1	04/08/2022	FOR CONSTRUCTION

DATE	04/08/22
JOB NO.	3923.00
DRAWN	MLG
CHECKED	RFW/TJB

COPYRIGHT © 2022 - App Architecture, Inc.

TITLE
COVER SHEET

SHEET NO.
G0.1

4/8/2022 5:04:52 PM

MIAMI COUNTY ONE STOP CENTER

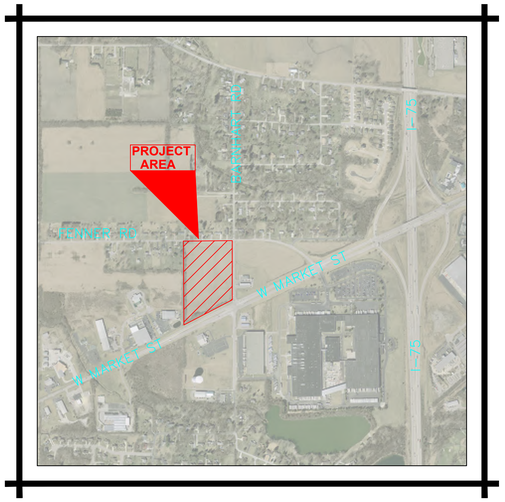

VICINITY MAP

O E

CITY OF TROY
MIAMI COUNTY, OHIO

INDEX OF SHEETS

TITLE SHEET	C0.1
GENERAL NOTES	C0.2–C0.4
GENERAL DETAILS	C0.5–C0.7
ADA SITE ACCESSIBILITY NOTES AND DETAILS	C0.8
TYPICAL PAVEMENT SECTION	C0.9
FINAL PLAT	C0.10–C0.11
EXISTING TOPO PLAN	C1.1
DIMENSIONING AND PAVEMENT PLAN	C1.2
UTILITY PLAN	C2.1
GRADING PLAN	C3.1
PAVEMENT ELEVATION PLAN	C3.2
INTERSECTION ELEVATION PLAN	C3.3
LANDSCAPE PLAN	C4.1
JAN COURT PLAN AND PROFILE	C5.1
TRAFFIC CONTROL PLAN	C5.2
VEHICLE TURN TEMPLATE	C5.3–C5.4
SWPPP TITLE SHEET	C6.1
SWPPP EROSION CONTROL NOTES AND DETAILS	C6.2–C6.4
SWPPP SITE EROSION CONTROL PLAN	C6.5

2019 SPECIFICATIONS

THE CONSTRUCTION STANDARDS AND DRAWINGS OF THE CITY OF TROY AND THE STANDARD SPECIFICATIONS OF THE STATE OF OHIO DEPARTMENT OF TRANSPORTATION, INCLUDING CHANGES AND GENERAL NOTES LISTED IN THE PLAN, SHALL GOVERN THIS IMPROVEMENT. THE MOST RESTRICTIVE SHALL APPLY.

PROJECT DESCRIPTION

THIS PROJECT CONSISTS OF THE CONSTRUCTION A ROAD, NEW BUILDING, ASSOCIATED DRIVES AND PARKING FOR THE MIAMI COUNTY ONE STOP CENTER, LOCATED ON JAN COURT WITHIN THE CITY OF TROY. SITE WORK TO INCLUDE STORM SEWER, SANITARY SEWER, WATER, SITE GRADING, PAVEMENT WORK AND BUILDING CONSTRUCTION.

UNDERGROUND UTILITIES
Contact Two Working Days Before You Dig
OHIO811.org Before You Dig
OHIO811. 8-1-1. or 1-800-362-2764
(Non-members must be called directly)

CITY OF TROY STANDARD CONSTRUCTION DRAWINGS				ODOT STANDARD CONSTRUCTION DRAWINGS
100–1	11–2017	600–12	11–2017	
100–2	11–2017	600–13	11–2017	
100–3	12–2019	600–14	11–2017	
100–5	11–2017	800–1	12–2019	
300–1	11–2017	800–2	11–2017	
300–2	11–2017	800–3	12–2019	
300–6	11–2017	800–4	11–2017	
300–7	11–2017	800–5	11–2017	
300–8	11–2017	800–6	12–2019	
300–10	11–2017	800–8	12–2019	
300–11	11–2017	900–1	12–2019	
300–12	11–2017	900–2	12–2019	ODOT SUPPLEMENTAL SPECIFICATIONS
300–13	11–2017	900–3	11–2017	
300–14	11–2017	900–4	12–2019	
600–1	12–2019	900–8	11–2017	800 1–21–2022
600–2	11–2017	900–9	11–2017	832 10–19–2018
600–3	11–2017	900–10	11–2017	
600–4	11–2017			
600–5	11–2017			
600–8	11–2017			
600–10	11–2017			
600–11	11–2017			

Approved _____
Date _____ AUTHORIZED SIGNATURE

ChoiceOne Engineering
440 E. HOEWISHER ROAD • SIDNEY, OHIO 45365 • 937.497.0200
8956 GLENDALE MILFORD ROAD, SUITE 1 • LOVELAND, OHIO 45140 • 513.239.8554
www.CHOICEONEENGINEERING.com

APRIL 8, 2022

ANDREW T. SHUMAN, P.E. — 2–25–2022 DATE
P.E.–#71386

STATE OF OHIO ANDREW T. SHUMAN 71386 REGISTERED PROFESSIONAL ENGINEER

App Architecture creative focused design
625 Woodside Drive, Englewood, Ohio 45322
T 937.836.8898 F 937.832.3666
www.app-arch.com

STATE OF OHIO ANDREW T. SHUMAN 71386 REGISTERED PROFESSIONAL ENGINEER

MIAMI COUNTY ONE STOP CENTER
BOARD OF COMMISSIONERS FOR MIAMI COUNTY, OHIO
BARNHART ROAD, TROY, OHIO 45373

ISSUE

NO.	DATE	DESCRIPTION
1	04/08/2022	FOR CONSTRUCTION

DATE	04/08/22
JOB NO.	3923.00
DRAWN	JAC
CHECKED	ATS

COPYRIGHT © 2022 - App Architecture, Inc.

TITLE
TITLE SHEET

SHEET NO.
C0.1

ELEVATION DATUM
ALL ELEVATIONS ARE BASED ON NAVD 88 (ODOT VRS GEOID 18).

GENERAL NOTES AND DETAILS
ALL CONSTRUCTION METHODS, MATERIALS, AND SPECIFICATIONS SHALL COMPLY WITH THE LATEST VERSION OF THE CITY OF TROY STANDARDS AND SPECIFICATIONS AND/OR THE LATEST VERSION OF THE OHIO DEPARTMENT OF TRANSPORTATION CONSTRUCTION STANDARDS AND SPECIFICATIONS (INCLUDING CURRENT SUPPLEMENTAL SPECIFICATIONS 800 AND 832), WHICHEVER IS MORE RESTRICTIVE AS DETERMINED BY THE CITY OF TROY.

UNDERGROUND UTILITIES
THE LOCATIONS OF THE UNDERGROUND UTILITIES SHOWN ON THE PLANS ARE AS OBTAINED FROM THE OWNERS OF THE UTILITY AS REQUIRED BY SECTION 153.64 ORC. EXISTING UTILITIES ARE SHOWN IN THEIR APPROXIMATE LOCATION ACCORDING TO THE BEST AVAILABLE DATA. THE CONTRACTOR WILL BE RESPONSIBLE FOR LOCATING THEM IN THE FIELD PRIOR TO CONSTRUCTION AND WILL BE RESPONSIBLE FOR ANY DAMAGE DONE TO THEM. CONTRACTOR TO CONTACT OHIO UTILITIES PROTECTION SERVICE (1–800–362–2764) 48 HOURS PRIOR TO CONSTRUCTION.

NON–MEMBERS MUST BE CALLED DIRECTLY.

UTILITY OWNERSHIP
LISTED BELOW ARE ALL UTILITIES LOCATED WITHIN THE PROJECT CONSTRUCTION LIMITS TOGETHER WITH THEIR RESPECTIVE OWNERS:

STREETS AND STORM SEWER
CITY OF TROY
ADDRESS
CITY, OHIO ZIP
(XXX) PHONE
ATTN: PERSON

WATER AND SANITARY
CITY OF TROY
ADDRESS
CITY, OHIO ZIP
(XXX) PHONE
ATTN: PERSON

ELECTRIC
AES OHIO
1900 DRYDEN ROAD
DAYTON, OH 45439
(937) 608–2814
ATTN: WILLIAM GOURLEY

OHIO UTILITIES PROTECTION SERVICE 2 WORKING DAYS BEFORE YOU DIG CALL TOLL FREE
800–362–2764

TELEPHONE
FRONTIER COMMUNICATIONS
10 MULBERRY ST
BROOKVILLE, OH 45309
(937) 833–0468
ATTN: CHARLES BERNACCHI

CABLE
CHARTER COMMUNICATIONS
3691 TURNER RD
DAYTON, OH 45415
(937) 396–8372
ATTN: JACOB HOUDESHELL

CABLE
METRONET
100 HARRISBURG, DR
ENGLEWOOD, OH 45322
(812) 213–1318
ATTN: STEVE HERMAN

GAS
CENTERPOINT ENERGY
6500 CLYO ROAD
CENTERVILLE, OH 45459
(937) 312–2521
ATTN: GREGORY FISHMAN

UTILITY INTERFERENCE
IF, DURING THE CONSTRUCTION, INTERFERENCE ARISES WITH EXISTING UTILITIES IT SHALL BE THE RESPONSIBILITY OF THE CONTRACTOR TO NOTIFY AND COORDINATE AS NEEDED WITH THE UTILITY COMPANY INVOLVED. ANY AND ALL WORK REQUIRED FOR PRIVATE UTILITIES SHALL BE COORDINATED WITH AND, IF REQUIRED, DONE BY THEIR RESPECTIVE OWNERS, UNLESS OTHERWISE NOTED ON THESE PLANS. THE CONTRACTOR SHALL NOTIFY, AT LEAST 7 DAYS BEFORE BREAKING GROUND, ALL PUBLIC SERVICE CORPORATIONS HAVING WIRES, POLES, PIPES, CONDUITS, MANHOLES, OR OTHER STRUCTURES THAT MAY BE AFFECTED BY THIS OPERATION, INCLUDING ALL STRUCTURES WHICH ARE AFFECTED AND NOT SHOWN ON THESE PLANS.

EXISTING TILE HOOKUPS
THE DRAINAGE TILE CURRENTLY CONNECTED TO THE EXISTING STORM SEWER SHALL BE CONNECTED TO THE PROPOSED STORM SEWER. ANY DRAINAGE TILE DAMAGED BY THE CONTRACTOR SHALL BE REPLACED BY THE CONTRACTOR TO A CONDITION EQUAL TO OR BETTER THAN ITS ORIGINAL CONDITION. ALL TILE REMOVED, REPLACED AND/OR CONNECTED TO THE STORM SEWER SHALL BE NOTED ON THE RECORD DRAWINGS AND SHALL BE INSPECTED BY THE CITY OF TROY BEFORE THEY ARE COVERED.

ALL FIELD OR STORM DRAINS WHICH ARE ENCOUNTERED DURING CONSTRUCTION SHALL BE PROVIDED WITH UNOBSTRUCTED OUTLETS OR PLUGGED AS APPROVED AND DIRECTED BY THE CITY OF TROY. CONNECTION OF INTERSECTING DRAIN TILES AND THE PROPOSED STORM SEWER SHALL BE THROUGH MANUFACTURED TEES, UNLESS OTHERWISE APPROVED BY THE CITY OF TROY. COST OF THIS ITEM SHALL BE INCLUDED IN THE COST OF THE CONTRACTORS OVERALL LUMP SUM BID FOR THE PROJECT.

GEOTECHNICAL ENGINEERING REPORT
CONTRACTOR SHALL REVIEW THE GEOTECHNICAL REPORT FOR THE PROPOSED PROJECT AND PERFORM ALL GEOTECHNICAL WORK IN ACCORDANCE WITH THIS REPORT.

CROSSINGS AND CONNECTIONS TO EXISTING PIPES AND UTILITIES
WHERE PLANS PROVIDE FOR A PROPOSED CONDUIT TO BE CONNECTED TO, OR CROSS OVER OR UNDER AN EXISTING SEWER OR UNDERGROUND UTILITY, THE CONTRACTOR SHALL LOCATE THE EXISTING PIPES OR UTILITIES BOTH AS TO LINE AND GRADE BEFORE STARTING TO LAY THE PROPOSED CONDUIT.

IF IT IS DETERMINED THAT THE ELEVATION OF THE EXISTING CONDUIT, OR EXISTING APPURTENANCE TO BE CONNECTED, DIFFERS FROM THE PLAN ELEVATION OR RESULTS IN A CHANGE IN THE PLAN CONDUIT SLOPE, CITY OF TROY SHALL BE NOTIFIED BEFORE STARTING CONSTRUCTION OF ANY PORTION OF THE PROPOSED CONDUIT WHICH WILL BE AFFECTED BY THE VARIANCE IN THE EXISTING ELEVATIONS.

IF IT IS DETERMINED THAT THE PROPOSED CONDUIT WILL INTERSECT THE EXISTING SEWER OR UNDERGROUND UTILITY IF CONSTRUCTED AS SHOWN ON THE PLAN, CITY OF TROY SHALL BE NOTIFIED BEFORE STARTING CONSTRUCTION OF ANY PORTION OF THE PROPOSED CONDUIT WHICH WOULD BE AFFECTED BY THE INTERFERENCE WITH AN EXISTING FACILITY. COST OF THIS ITEM SHALL BE INCLUDED IN THE COST OF THE CONTRACTORS OVERALL LUMP SUM BID FOR THE PROJECT.

MUD
THE TRACKING OR SPILLAGE OF MUD, DIRT, OR DEBRIS UPON PUBLIC STREETS IS PROHIBITED AND ANY SUCH OCCURRENCE SHALL BE CLEANED UP IMMEDIATELY BY THE CONTRACTOR.

EXISTING UTILITY CONFLICT NOTE
IF A CONFLICT ARISES WITH EXISTING UTILITIES, THE CONTRACTOR SHALL COORDINATE WITH THE OWNER AND APPROPRIATE UTILITY COMPANY TO GET THE CONFLICT RESOLVED.

UTILITY STATEMENT
THE UNDERGROUND UTILITIES SHOWN HAVE BEEN LOCATED FROM FIELD SURVEY INFORMATION AND EXISTING DRAWINGS. CHOICE ONE ENGINEERING CORPORATION MAKES NO GUARANTEES THAT THE UNDERGROUND UTILITIES SHOWN COMPRISE ALL SUCH UTILITIES IN THE AREA EITHER IN–SERVICE OR ABANDONED. CHOICE ONE ENGINEERING CORPORATION FURTHER DOES NOT WARRANT THAT THE UNDERGROUND UTILITIES SHOWN ARE IN THE EXACT LOCATION INDICATED. CHOICE ONE ENGINEERING CORPORATION HAS NOT PHYSICALLY LOCATED THE UNDERGROUND UTILITIES.

CAD FILE DISCLAIMER
THE CAD FILE ASSOCIATED WITH THESE CONSTRUCTION PLANS IS A NON–CERTIFIED DOCUMENT. ANY USE OF THE INFORMATION OBTAINED OR DERIVED FROM THE ASSOCIATED CAD FILE WILL BE AT THE RECEIVING PARTY/USER'S RISK. CHOICE ONE ENGINEERING CORP. OFFERS NO WARRANTY AS TO THE ACCURACY OF THE INFORMATION IN THE CAD FILE OR THAT REVISIONS HAVE BEEN ISSUED AFTER THE CAD DRAWING WAS RELEASED. RECEIVING PARTIES/USERS SHALL HOLD HARMLESS TO THE MAXIMUM EXTENT ALLOWED BY LAW CHOICE ONE ENGINEERING CORP. FROM ANY USE OF THE CAD FILE BY THE RECEIVING PARTY/USER. IN ALL CIRCUMSTANCES, AND AT ALL TIMES, THE PUBLISHED PAPER AND/OR PDF DRAWINGS FOR THE PROJECT SHALL SUPERSEDE THE CAD FILES. IN THE CASE OF AN INCONSISTENCY BETWEEN THE PUBLISHED PAPER/PDF DRAWINGS AND THE ASSOCIATED CAD FILE, THE PUBLISHED PAPER/PDF DRAWINGS SHALL GOVERN THE PROJECT AND ALL WORK.

SAFETY
THE CONTRACTOR SHALL BE SOLELY RESPONSIBLE FOR COMPLYING WITH ALL FEDERAL, STATE, AND LOCAL SAFETY REQUIREMENTS, TOGETHER WITH EXERCISING PRECAUTIONS AT ALL TIMES FOR THE PROTECTION OF PERSONS (INCLUDING EMPLOYEES) AND PROPERTY. IT IS ALSO THE SOLE RESPONSIBILITY OF THE CONTRACTOR TO INITIATE, MAINTAIN, AND SUPERVISE ALL SAFETY REQUIREMENTS, PRECAUTIONS, AND PROGRAMS IN CONNECTION WITH THE WORK.

MASONRY COLLAR
A CONCRETE COLLAR SHALL BE PROVIDED WHERE PROPOSED STORM SEWER PIPE IS CONNECTED TO AN EXISTING PIPE. COST OF THIS ITEM SHALL BE INCLUDED IN THE COST OF THE CONTRACTORS OVERALL LUMP SUM BID FOR THE PROJECT.

DEWATERING
ANY NECESSARY DEWATERING OR PUMPING NECESSARY FOR THE CONSTRUCTION OF ANY ITEMS SHALL BE INCIDENTAL TO THOSE PARTICULAR CONSTRUCTION ITEMS AND SHALL BE INCLUDED IN THE CONTRACTORS OVERALL LUMP SUM BID FOR THE PROJECT.

CLEAN WATER NOTE
ROOF DRAINS, FOUNDATION DRAINS, AND ALL OTHER CLEAN WATER CONNECTIONS TO THE SANITARY SYSTEM ARE PROHIBITED.

SANITARY SEWER/LATERAL NOTE
ALL SANITARY SEWER LINES AND SANITARY LATERALS MUST BE INSTALLED WITH 40 INCHES MINIMUM OF COVER OR BELOW FROST DEPTH WHICHEVER IS GREATER.

RETENTION BASIN CLAY LINER NOTE
WHEN A RETENTION BASIN IS SHOWN, CONTRACTOR TO VERIFY SOIL IS SUITABLE TO HOLD WATER FOR PERMANENT POOL. IF FOUND THAT THE SOIL IS UNSUITABLE FOR PERMANENTLY HOLDING WATER, AN 18" THICK COMPACTED CLAY LINER SHALL BE INSTALLED THROUGHOUT THE ENTIRE WET POOL PORTION OF THE RETENTION BASIN. COST OF THIS ITEM SHALL BE INCLUDED IN THE COST OF THE CONTRACTORS OVERALL LUMP SUM BID FOR THE PROJECT.

STORM SEWER INSTALLATION
THIS WORK CONSISTS OF CONSTRUCTING STORM SEWER. THE CONTRACTOR SHALL PROVIDE ALL TOOLS AND EQUIPMENT REQUIRED FOR INSTALLING THESE ITEMS. THE WORK ALSO INCLUDES FURNISHING ALL MATERIALS, EXCAVATING, BEDDING, LAYING PIPE, JOINTING, BACKFILLING, REMOVAL AND RESTORATION OF DISTURBED FACILITIES AND SURFACES, CURB REPAIR, SIDEWALK REPAIR, PAVEMENT REPAIR (i.e. PAVEMENT IN STREETS, ALLEYS AND DRIVEWAYS), DISPOSAL OF ALL SURPLUS EXCAVATION AND DISCARDED MATERIALS, AND OTHER WORK NECESSARY TO COMPLETE THE ITEMS. THE CONTRACTOR SHALL BE RESPONSIBLE TO FIELD LOCATE ALL EXISTING STORM SEWER, AND OTHER UTILITIES, PRIOR TO INSTALLING THE PROPOSED STORM SEWER SYSTEM. THE EXISTING STORM SEWER AND LATERALS SHOWN ON THE PLANS ARE IN THE APPROXIMATE LOCATION AND IT IS THE CONTRACTORS RESPONSIBILITY TO FIELD LOCATE PROPOSED TIE–INS TO THE EXISTING STORM PRIOR TO ANY STORM SEWER CONSTRUCTION. ALL TIE–INS SHALL BE THROUGH PREMANUFACTURED TEES OR HOLES INSTALLED USING A CORING MACHINE. PIPE MAY BE ANY OF THE PIPE TYPES LISTED BELOW UNLESS OTHERWISE SPECIFIED ON THE PLANS.

TYPES OF PIPE PERMITTED	ODOT MATERIALS NUMBERS
CORRUGATED POLYETHYLENE SMOOTH-LINED PIPE (CPSLP)	707.33
POLYPROPYLENE CORRUGATED DOUBLE WALL PIPE (HP)	707.65
POLYVINYL CHLORIDE SOLID WALL PIPE (SDR-35)	707.45
REINFORCED CONCRETE PIPE (RCP)	706.02

GENERAL NOTES
1. INSTALL AND TEST ALL UTILITIES PER THE LATEST VERSION OF THE CITY OF TROY STANDARDS.

2. ALL DISTURBED AREAS AND ALL NON–PAVEMENT AREAS SHALL HAVE A MINIMUM OF 6" OF TOP SOIL PLACED AND ARE TO BE SEEDED AND MULCHED PER ODOT ITEM 659.

3. ALL CONCRETE USED FOR HEAVY DUTY PAVEMENT(S) AND STANDARD DUTY PAVEMENT(S) SHALL BE ODOT QC–1P AND REINFORCED WITH CONCRETE FIBERS AS SPECIFIED IN THE PROPOSED PAVEMENT SECTION(S). ALL OTHER CONCRETE (WALKS, CURBS, ETC.) SHALL BE ODOT QC MISC. (CEMENT ONLY – NO POZZOLAN MATERIAL) REINFORCED WITH 3 LBS/CY OF EITHER EUCLID CHEMICAL TUFSTRAND SF, FORTA FERRO FIBRILLATED MACROFIBERS OR APPROVED EQUIVALENT MEETING ASTM C 1116 TYPE 3, MINIMUM 2" LENGTH, ASPECT RATIO 50 TO 90. CONTRACTOR SHALL CONTACT THE FIBER MANUFACTURER'S SUPPLIER 48 HOURS PRIOR TO ORDERING THE FIRST BATCH OF CONCRETE FOR APPROPRIATE MIXING AND FINISHING PROCEDURES.

4. CONTRACTOR TO BE RESPONSIBLE FOR ANY PERMITS OR FEES THAT MAY BE NECESSARY FOR THE COMPLETION OF THE SITE WORK.

5. ALL WORK SHALL CONFORM WITH ALL FEDERAL, STATE, AND LOCAL ADA REGULATIONS AND STANDARDS.

6. ALL ITEMS ON SITE PLAN SHALL BE CONSTRUCTED PER THE LATEST VERSION OF THE CITY OF TROY STANDARDS.

STORM AND SANITARY CONDUITS/STRUCTURES AND RELATED WORK
THIS ITEM OF WORK SHALL CONSIST OF THE WORK AS DESCRIBED IN OHIO DEPARTMENT OF TRANSPORTATION ITEM 611, PIPE CULVERTS, SEWERS, DRAINS, AND DRAINAGE STRUCTURES, EXCEPT AS HEREIN MODIFIED.

THE INSTALLATION OF ALL STORM SEWER, SANITARY SEWER, AND ALL CORRESPONDING STRUCTURES SHALL BE PER MANUFACTURER'S RECOMMENDATIONS OR AS NOTED ON THE PLANS. THE CONTRACTOR SHALL BE REQUIRED TO MAINTAIN A HIGH STANDARD OF WORK. CONTRACTOR IS RESPONSIBLE TO ENSURE ALL WORK IS PERFORMED IN ACCORDANCE WITH THE MANUFACTURER'S RECOMMENDATIONS OR AS NOTED ON THE PLANS. CONTRACTOR SHALL ALSO ENSURE THAT ALL ITEMS ARE FULLY AND PROPERLY FUNCTIONAL, AND TO A QUALITY ACCEPTABLE TO THE OWNER.

ALL PIPE CULVERTS, CONDUITS, SEWERS, DRAINS, AND DRAINAGE STRUCTURES (CATCH BASINS, YARD DRAINS, MANHOLES, ETC.) SHALL MEET THE MATERIAL REQUIREMENTS OF THIS ITEM. THE FOLLOWING ITEMS WILL NOT BE REQUIRED UNLESS OTHERWISE NOTED: 1) INSTALLATION PLAN, 2) CONSTRUCTION INSPECTION FORMS, 3) PERFORMANCE INSPECTIONS AND REPORTS, 4) CONDUIT AND DRAINAGE STRUCTURE EVALUATIONS.

THE CONTRACTOR SHALL ENSURE THE CONDUIT BEDDING AND BACKFILL COMPACTION DENSITY MEETS ASTM D698 (98% STANDARD PROCTOR). TESTING MAY BE REQUIRED IF DEEMED NECESSARY BY THE OWNER OR THE OWNER'S REPRESENTATIVE.

MAINTAINING TRAFFIC
MAINTAIN TRAFFIC AS INDICATED IN THE "OHIO MANUAL OF UNIFORM TRAFFIC CONTROL DEVICES FOR STREETS AND HIGHWAYS", ALSO THE FOLLOWING REQUIREMENTS SHALL APPLY.

EXCAVATIONS WITHIN PUBLIC RIGHT–OF–WAY LIMITS SHALL BE CLOSED AT TIMES WHEN WORK IS NOT BEING PERFORMED.

LOCAL TRAFFIC SHALL BE MAINTAINED AT ALL TIMES EXCEPT DURING THE TIME THAT AN APPROVED CLOSURE AND DETOUR IS ALLOWED BY THE GOVERNING AUTHORITY.

ALL WORK AND TRAFFIC CONTROL DEVICES SHALL BE IN ACCORDANCE WITH ITEM 614 AND OTHER APPLICABLE PORTIONS OF THE SPECIFICATIONS, AS WELL AS THE OHIO MANUAL OF UNIFORM TRAFFIC CONTROL DEVICES.

THE CONTRACTOR SHALL BE RESPONSIBLE FOR PLACING NECESSARY TRAFFIC CONTROL DEVICES AND PAVEMENT REPAIR MATERIALS TO MAINTAIN THE TRAVELED PAVEMENT SAFELY.

NO SHUT DOWN OF ANY OWNER FACILITY DRIVE, ROADWAY OR PARKING LOT WILL BE ALLOWED WITHOUT WRITTEN CONSENT FROM THE OWNER. ALL OWNER ROADWAYS MUST HAVE AT LEAST ONE LANE OPEN AT ALL TIMES. NO STAGING OF TRUCKS OUTSIDE OF CONSTRUCTION LIMITS WILL BE PERMITTED WITHOUT CONSENT FROM THE OWNER.

SUBCONTRACTOR SUPERVISION
THE CONTRACTOR IS REQUIRED TO HAVE SOMEONE ON–SITE TO SUPERVISE THE SUBCONTRACTOR FOR QUALITY CONTROL PURPOSES AND TO PROVIDE ANY NECESSARY ASSISTANCE TO THE SUBCONTRACTOR TO ENSURE QUALITY WORK. COST OF THIS ITEM SHALL BE INCLUDED IN THE COST OF THE CONTRACTORS OVERALL LUMP SUM BID FOR THE PROJECT.

EXCAVATION AND EMBANKMENT
TOPSOIL SHALL BE REMOVED FROM ALL DISTURBED AREAS AND ALL AREAS TO BE EXCAVATED OR EMBANKED. A MINIMUM OF 6" OF TOPSOIL SHALL BE FINE GRADED ON ALL DISTURBED AREAS.

ALL EMBANKMENT SHALL BE COMPACTED TO A MINIMUM OF 100% STANDARD PROCTOR OR AS DETERMINED BY THE OWNER. TESTING MAY BE REQUIRED BY THE OWNER.

SAWCUT PAVEMENT JOINTS
MORE THAN ONE SAWCUT MAY BE NECESSARY TO ENSURE A CLEAN CUT. JUST PRIOR TO ASPHALT OR CONCRETE PLACEMENT, ASPHALT MATERIAL SHALL BE PLACED ON THE VERTICAL FACE OF SAWCUT JOINTS PRIOR TO PAVING AS PER 401.14. AFTER THE ASPHALT WORK IS COMPLETED, THE TRANSVERSE JOINTS SHALL BE SEALED WITH LIQUID ASPHALT.

ChoiceOne Engineering

App Architecture
creative focused design
615 Woodside Drive, Englewood, Ohio 45322
T 937.836.8898 F 937.832.3666
www.app-arch.com

STATE OF OHIO ANDREW T. SHUMAN 71386 REGISTERED PROFESSIONAL ENGINEER

MIAMI COUNTY ONE STOP CENTER
BOARD OF COMMISSIONERS FOR MIAMI COUNTY, OHIO
BARNHART ROAD, TROY, OHIO 45373

ISSUE

NO.	DATE	DESCRIPTION
1	04/08/2022	FOR CONSTRUCTION

DATE	04/08/22
JOB NO.	3923.00
DRAWN	JAC
CHECKED	ATS

COPYRIGHT © 2022 - App Architecture, Inc.

TITLE
GENERAL NOTES

SHEET NO.
C0.2

WATER LINE CROSSING SEPARATION

CONTRACTOR SHALL LOWER/DIP ANY EXISTING OR PROPOSED WATER LINES AS NEEDED TO OBTAIN AN 18" MINIMUM SEPARATION DISTANCE FROM THE WATER LINE TO ANY STORM OR SANITARY SEWER. WATER LINE SHALL BE LAID AT LEAST 10' HORIZONTALLY FROM ANY SEWERS. WHENEVER A SANITARY OR STORM SEWER AND WATER LINE MUST CROSS, THE SEWER AND WATER SHALL BE LAID AT SUCH AN ELEVATION THAT THERE IS AT LEAST 18" OF SEPARATION BETWEEN THE OUTSIDE WALLS OF THE TWO PIPES. ALSO ONE FULL LENGTH OF WATERLINE SHALL BE LOCATED SO THE JOINTS ARE AS FAR FROM THE STORM AND SANITARY SEWERS AS POSSIBLE. IF IT IS ABSOLUTELY IMPOSSIBLE TO MAINTAIN THE 18" VERTICAL SEPARATION, THE SEWER SHALL BE CONSTRUCTED OF WATER LINE TYPE MATERIALS WHICH WOULD BE ABLE TO WITHSTAND A 100 PSI PRESSURE TEST (NOTE: DO NOT PRESSURE TEST SEWER TO 100 PSI). THESE REQUIREMENTS WILL EXTEND FOR THE DISTANCE OF THE ENTIRE SPAN. NO CHANGE OF MATERIALS ARE ALLOWED MID-SPAN. COST OF THIS ITEM SHALL BE INCLUDED IN THE COST OF THE CONTRACTOR'S OVERALL LUMP SUM BID FOR THE PROJECT.

PAVEMENT MARKINGS

ALL PAVEMENT MARKINGS SHALL BE PER ODOT ITEM 640 AND 642. ALL PAVEMENT MARKINGS TO BE TYPE 1, UNLESS APPLICATION IS REQUIRED WHEN AIR AND PAVEMENT TEMPERATURES ARE BETWEEN 35 °F AND 50 °F, THEN OBTAIN APPROVAL FROM THE OWNER AND APPLY ONLY PRE-QUALIFIED TYPE 1A COLD WEATHER TRAFFIC PAINT MATERIALS PER ITEM 642 AND 740.

ALL MARKING LAYOUT AND COLOR SHALL BE APPROVED BY THE OWNER'S REPRESENTATIVE PRIOR TO INSTALLATION.

DOWNSPOUTS

THE CONTRACTOR SHALL CONNECT ANY DOWNSPOUTS AS SHOWN ON THE SITE PLAN OR TO THE CLOSEST STORM PIPING OR CATCH BASINS USING CPSLP OR PVC SDR-35 SEWER OR APPROVED EQUAL.

UTILITIES

CONTRACTOR SHALL INSTALL AND/OR COORDINATE THE INSTALLATION OF GAS, ELECTRIC, TELEPHONE, CABLE TELEVISION, FIBER OPTIC, ETC.. CONTRACTOR SHALL CONTACT THE UTILITY COMPANIES PRIOR TO INSTALLATION OF ANY FACILITIES. ALL UTILITIES SHALL BE INSTALLED PER EACH PARTICULAR UTILITY COMPANY'S STANDARDS AND PROCEDURES. CONTRACTOR TO VERIFY ACTUAL SIZES, LOCATIONS (POINTS OF ENTRY INTO THE BUILDING) AND INVERTS OF ALL UTILITIES TYING INTO THE BUILDING WITH ALL ARCHITECT PLANS (BUILDING, PLUMBING, ELECTRICAL, ETC.) BEFORE CONSTRUCTION.

ASPHALT PAVEMENT REPLACEMENT NOTE

ANY EXISTING PAVEMENT THAT IS TO BE REMOVED SHALL BE SAWCUT FULL DEPTH AND RESTORED TO MATCH THE EXISTING PAVEMENT CROSS SECTION UNLESS OTHERWISE NOTED IN THE PLANS.

ASPHALT

ALL ODOT CONSTRUCTION AND MATERIAL SPECIFICATIONS SHALL APPLY TO THIS PROJECT EXCEPT FOR ODOT ITEM 401.20 ASPHALT BINDER PRICE ADJUSTMENT (ASPHALT CONCRETE BID ITEMS ARE NOT ELIGIBLE FOR ANY ASPHALT BINDER PRICE ADJUSTMENT).

ALL ASPHALT DELIVERED SHALL BE ACCOMPANIED WITH A LOAD TICKET AS PER ITEM 401.21.

REVIEW OF DRAINAGE FACILITIES

BEFORE FINAL ACCEPTANCE BY THE OWNER, REPRESENTATIVES OF THE OWNER, AND THE CONTRACTOR, SHALL MAKE AN INSPECTION OF ALL EXISTING SEWERS WHICH ARE TO REMAIN IN SERVICE AND WHICH MAY BE AFFECTED BY THE WORK. ALL EXISTING SEWERS INSPECTED BY THE ABOVE MENTIONED PARTIES SHALL BE MAINTAINED AND LEFT IN A CONDITION REASONABLY COMPARABLE TO PRE-EXISTING CONDITION OF THE SEWER. ANY CHANGE IN THE CONDITION RESULTING FROM THE CONTRACTOR'S OPERATIONS SHALL BE CORRECTED BY THE CONTRACTOR TO THE SATISFACTION OF THE CITY OF TROY AND/OR OWNER.

ALL NEW CONDUITS, UNDERDRAINS (INCLUDING THE STONE BACKFILL ABOVE THE UNDERDRAIN PIPING), INLETS, CATCH BASINS, MANHOLES, SWALES/DITCHES, AND DETENTION/RETENTION BASINS CONSTRUCTED AS A PART OF THE PROJECT SHALL BE FREE OF ALL FOREIGN MATTER (INCLUDING SEDIMENT) AND IN A CLEAN CONDITION AND FULLY AND PROPERLY FUNCTIONAL BEFORE THE PROJECT WILL BE ACCEPTED BY THE OWNER.

CLEARING AND GRUBBING

CONTRACTOR TO CLEAR THE AREA AS SHOWN ON THE PLANS AND/OR AS NEEDED TO WORK ON THIS PROJECT. UNLESS STATED ELSEWHERE IN THE PLANS, CLEARING AND GRUBBING IS TO BE KEPT TO A MINIMUM IN ORDER TO PRESERVE THE WOODED AREAS.

MODIFICATIONS

ANY MODIFICATIONS TO THE SPECIFICATIONS OR CHANGES TO THE WORK AS SHOWN ON THE DRAWINGS MUST HAVE PRIOR WRITTEN APPROVAL BY THE OWNER.

RESTORATION

THE CONTRACTOR SHALL BE RESPONSIBLE FOR RESTORING ANY DISTURBED AND/OR DAMAGED AREAS, INCLUDING PAVEMENT, TO CONDITIONS EQUAL TO OR BETTER THAN CONDITIONS PRIOR TO CONSTRUCTION OR TO THE SATISFACTION OF THE OWNER.

MISCELLANEOUS

THE INTENT OF THESE DRAWINGS IS TO INCLUDE ALL ITEMS NECESSARY FOR THE PROPER EXECUTION AND COMPLETION OF THE WORK BY THE CONTRACTOR. PERFORMANCE BY THE CONTRACTOR SHALL BE REQUIRED TO THE EXTENT CONSISTENT WITH THE CONTRACT DOCUMENTS AND REASONABLY INFERABLE FROM THEM AS BEING NECESSARY TO PRODUCE THE INTENDED RESULTS.

IN THE CASE OF AN INCONSISTENCY BETWEEN DRAWINGS AND SPECIFICATIONS OR WITHIN EITHER DOCUMENT, THE BETTER QUALITY OR GREATER QUANTITY OF WORK SHALL BE PROVIDED IN ACCORDANCE WITH THE OWNER'S REPRESENTATIVE'S INTERPRETATION.

CONTRACTORS SHALL VERIFY ALL GRADES, ELEVATIONS, AND EXISTING UTILITY LOCATIONS PRIOR TO CONSTRUCTION.

CONTRACTOR'S LUMP SUM BID PRICE SHALL INCLUDE ALL ITEMS AND OPERATIONS NEEDED, REQUIRED AND NECESSARY FOR THE PROPER EXECUTION OF THE PROJECT AND TO COMPLETE ALL WORK.

GRAFFITI AND VANDALISM

THE CONTRACTOR SHALL BE RESPONSIBLE FOR REMOVAL AND REPLACEMENT OF ANY CONCRETE WORK OR OTHER ITEMS UNDER THIS CONTRACT WHICH IS DEEMED UNACCEPTABLE BY THE OWNER DUE TO GRAFFITI OR VANDALISM DAMAGE.

OWNER COORDINATION NOTES

THE CONTRACTOR SHALL COORDINATE THE PROPOSED WORK WITH THE OWNER'S REPRESENTATIVE PRIOR TO PERFORMING ANY WORK ON SITE. IF THE CONTRACTOR IS TO ENGAGE IN ANY OPERATIONS THAT AFFECT THE EXISTING FACILITY OPERATIONS, THE CONTRACTOR SHALL COORDINATE THE SCHEDULING OF SUCH ACTIVITIES WITH THE OWNER'S REPRESENTATIVE PRIOR TO PERFORMING ANY SUCH OPERATIONS OR ACTIVITIES.

THE CONTRACTOR SHALL PROVIDE ALL TEMPORARY SUPPORT, BRACING, AND OTHER DEVICES AS MAY BE REQUIRED OR AS DIRECTED BY OWNER'S REPRESENTATIVE OR THE ENGINEER TO PROTECT THE SAFETY OF THE PUBLIC, ADJACENT STRUCTURES, ROADWAY AND/OR UTILITIES. ALL WORK TO BE COORDINATED WITH THE OWNER'S REPRESENTATIVE.

GENERAL NOTES FOR CIVIL WORK

1. THE CONTRACTOR SHALL BE RESPONSIBLE FOR ALL CONSTRUCTION STAKING AND IS TO INCLUDE SUCH COSTS AS A PART OF THE LUMP SUM PRICE ON THE PROJECT.

2. THE CONTRACTOR IS RESPONSIBLE TO CONTACT THE APPROPRIATE UNDERGROUND UTILITY MARKING SERVICE PRIOR TO THE START OF ANY CONSTRUCTION IN ORDER TO AVOID CONFLICTS WITH EXISTING UTILITIES. IF CONFLICTS ARE DISCOVERED, THE CONTRACTOR IS TO NOTIFY THE OWNER PRIOR TO THE START OF ANY WORK THAT WOULD BE IN CONFLICT WITH THE UTILITIES.

3. THE CONTRACTOR IS TO VISIT AND INVESTIGATE THE PROJECT SITE, PRIOR TO BIDDING, IN ORDER TO DETERMINE THE EXISTING GROUND AND SITE CONDITIONS. FOR SOIL TYPE AND GROUND WATER TABLE, THE CONTRACTOR IS ENCOURAGED TO UTILIZE ANY AVAILABLE DATA TO ESTIMATE GROUND CONDITIONS. SHOULD THE BIDDING CONTRACTOR REQUIRE ADDITIONAL TEST HOLES PRIOR TO BIDDING IN ORDER TO DETERMINE OR VALIDATE GROUND CONDITIONS, THIS CAN BE COMPLETED AT THE DISCRETION OF THE OWNER. NO TEST HOLES ARE TO BE DUG WITHOUT CONTACTING THE OWNER'S REPRESENTATIVE PRIOR TO EXCAVATION AND WITHOUT RECEIVING WRITTEN APPROVAL FROM THE OWNER'S REPRESENTATIVE TO DO SO.

4. THE CONTRACTOR SHALL COMPLY WITH ALL RULES AND REGULATIONS WITH REGARD TO EXCAVATION, SAFETY, QUALITY AND WORK PROGRESS. IT IS THE CONTRACTORS RESPONSIBILITY TO COMPLY WITH THESE THROUGHOUT CONSTRUCTION OPERATIONS.

5. THE LOCATION OF MATERIALS STORED ON SITE MUST RECEIVE THE APPROVAL OF THE OWNER. IN GENERAL, MATERIALS SHOULD BE STORED SO AS TO MINIMIZE THE INCONVENIENCE TO THE OWNER.

6. IF EXCAVATED MATERIALS ARE FOUND TO BE CONTAMINATED, REMEDIATION WILL BE AT THE OWNER'S EXPENSE PRIOR TO REMOVAL FROM THE SITE OR DISPOSAL ON-SITE BY THE CONTRACTOR. THIS PROCESS WILL BE COORDINATED BETWEEN THE OWNER AND CONTRACTOR.
7. TRENCH EXCAVATION SHALL BE PERFORMED IN ACCORDANCE WITH THE BID SPECIFICATIONS AND IN ACCORDANCE WITH ALL APPLICABLE OSHA RULES AND REGULATIONS. IN ADDITION, THE OWNER MAY HAVE ADDITIONAL REQUIREMENTS FOR EXCAVATION AND TRENCHING ON OWNER PROPERTY THAT MAY BE MORE STRINGENT THAN CURRENT LOCAL OR OSHA REQUIREMENTS. IN THIS CASE, THE OWNERS REQUIREMENTS ARE TO BE FOLLOWED UNLESS THIS ACTION WOULD BE CONSIDERED NON-COMPLIANT WITH CURRENT GOVERNING CODES OR REGULATIONS AS DEFINED BY LOCAL OR GOVERNING AUTHORITIES. WHERE A NON-COMPLIANCE ISSUE IS NOTED, THE CONTRACTOR IS TO MAKE THE OWNER AND ENGINEER AWARE OF THE GOVERNING CODE.

8. THE CONTRACTOR WILL BE RESPONSIBLE TO REPAIR, REPLACE, AND/OR RECONNECT ANY EXISTING DRAINAGE TILES, NOT SHOWN ON THE PLANS, WHICH CROSS THROUGH THE EXCAVATED TRENCH. ANY DRAINAGE TILES ENCOUNTERED ARE TO BE BROUGHT TO THE ATTENTION OF THE OWNER AND A MEASUREMENT TAKEN FROM THE NEAREST MANHOLE OR INLET STRUCTURE TO THE CENTERLINE OF THE TILE. THIS INFORMATION SHALL BE PROVIDED TO THE OWNER AS PART OF THE RECORD DRAWINGS.

9. THE CONTRACTOR WILL BE RESPONSIBLE FOR THE COST OF REPAIRS TO ANY UTILITY LINE(S) THAT THE CONTRACTOR DAMAGES UNLESS OTHERWISE CLEARLY THE RESPONSIBILITY OF THE UTILITY COMPANY.

10. THE CONTRACTOR WILL REPLACE ALL DAMAGED OR REMOVED DRIVES AND PAVEMENT WITH THE REQUIRED THICKNESS SHOWN ON THE PLANS OR MATCH EXISTING IF GREATER.

11. ALL DISTURBED LAWN AREAS SHALL BE GRADED TO DRAIN TO THE NEAREST INLET STRUCTURE.

12. CONTRACTOR SHALL USE PROPER EROSION CONTROL TECHNIQUES TO MAINTAIN GRADE PRIOR TO SEEDING.

13. CONTRACTOR TO REFER TO ODOT SPECIFICATION, ITEM 659 FOR SEEDING AND MULCHING UNLESS OTHERWISE SPECIFIED. CONTRACTOR WILL NOT SEED ANY AREA UNTIL OWNER HAS INSPECTED FINAL TOPSOIL GRADING.

14. CONTRACTOR SHALL BE RESPONSIBLE TO REPLACE ALL FENCES, LAWN DECORATIONS, TREES, SHRUBS, PLANTING, VEGETATION ETC. WHICH IS DAMAGED, DISTURBED OR REMOVED DURING CONSTRUCTION.

15. DURING PAVING OPERATIONS, THE CONTRACTOR MUST SUBMIT A WRITTEN PLAN IDENTIFYING DRIVE AREAS WITHIN THE SITE THAT WILL BE SHUT DOWN FOR CONSTRUCTION OPERATIONS PRIOR TO START OF ANY WORK IN THOSE AREAS. CONTRACTOR MUST MAINTAIN A MINIMUM OF ONE LANE FOR TRAFFIC IN ANY AREAS SO DESIGNATED BY THE OWNER THROUGHOUT ALL CONSTRUCTION OPERATIONS.

ITEM 203 EXCAVATION AND EMBANKMENT CONSTRUCTION, AS PER PLAN

THIS ITEM OF WORK SHALL CONSIST OF THE WORK AS DESCRIBED IN OHIO DEPARTMENT OF TRANSPORTATION ITEM 203 ROADWAY EXCAVATION AND EMBANKMENT, EXCEPT AS HEREIN MODIFIED.

TOPSOIL SHALL BE REMOVED FROM ALL DISTURBED AREAS AND ALL AREAS TO BE EXCAVATED OR EMBANKED. A MINIMUM OF 6" OF TOPSOIL SHALL BE FINE GRADED ON ALL DISTURBED AREAS.

ALL EMBANKMENT FOR ALL PAVEMENT OR BUILDING AREAS SHALL BE OF SUITABLE ENGINEERED FILL MATERIAL AND SHALL BE COMPACTED TO A MINIMUM OF 100% STANDARD PROCTOR OR AS DETERMINED BY THE OWNER. ALL OTHER EMBANKMENT AREAS SHALL BE COMPACTED TO A MINIMUM OF 100% STANDARD PROCTOR OR AS DETERMINED BY THE OWNER. TESTING MAY BE REQUIRED BY THE OWNER.

ALL EXCESS SURFACE MATERIAL, EXCAVATED UNSUITABLE MATERIAL AND ALL EXCESS EXCAVATED MATERIAL SHALL BE DISPOSED OF BY THE CONTRACTOR AT HIS OWN RESPONSIBILITY AND EXPENSE OUTSIDE OF THE PROPERTY AT A SITE APPROVED BY THE OWNER.

PAYMENT FOR ITEM 203 EXCAVATION AND EMBANKMENT CONSTRUCTION, AS PER PLAN, FOR ALL OPERATIONS DESCRIBED ABOVE SHALL BE INCLUDED IN THE LUMP SUM BID PRICE AND SHALL INCLUDE ALL LABOR, MATERIAL AND EQUIPMENT REQUIRED TO COMPLETE THIS ITEM OF WORK.

ITEM 204 SUBGRADE COMPACTION AND PROOF ROLLING, AS PER PLAN

THIS ITEM OF WORK SHALL CONSIST OF THE WORK AS DESCRIBED IN OHIO DEPARTMENT OF TRANSPORTATION ITEM 204 SUBGRADE COMPACTION AND PROOF ROLLING, EXCEPT AS HEREIN MODIFIED.

ALL AREAS TO RECEIVE PAVEMENT SHALL BE COMPACTED AS NOTED IN ODOT ITEM 204. OWNER'S REPRESENTATIVE WILL REQUIRE PROOF ROLLING OF SUBGRADE PRIOR TO INSTALLATION OF SUB-BASE AND/OR BASE MATERIAL. PROOF ROLLING SHALL CONSIST OF DRIVING OVER THE SUBGRADE WITH A LOADED TANDEM DUMP TRUCK AS DIRECTED BY THE OWNER'S REPRESENTATIVE UNTIL NO DEFLECTION OR TIRE INDENTATION IN THE SUBGRADE IS PRESENT. CONTRACTOR TO PERFORM ALL PROOF ROLLING PROCEDURES AND ANY NECESSARY CORRECTIVE MEASURES AS DIRECTED BY THE OWNER'S REPRESENTATIVE.

PAYMENT FOR ITEM 204 SUBGRADE COMPACTION AND PROOF ROLLING FOR ALL OPERATIONS DESCRIBED ABOVE SHALL BE INCLUDED IN THE LUMP SUM BID PRICE AND SHALL INCLUDE ALL LABOR, MATERIAL AND EQUIPMENT REQUIRED TO COMPLETE THIS ITEM OF WORK.

ITEM 204 EXCAVATION OF SUBGRADE AND STRUCTURAL EMBANKMENT, AS PER PLAN

THIS ITEM OF WORK SHALL CONSIST OF THE WORK AS DESCRIBED IN OHIO DEPARTMENT OF TRANSPORTATION ITEM 204 SUBGRADE COMPACTION AND PROOF ROLLING, EXCEPT AS HEREIN MODIFIED.

THIS WORK SHALL INCLUDE THE EXCAVATING OF UNSUITABLE SUBGRADE AND REPLACING WITH ODOT ITEM 304 AGGREGATE BASE, ODOT #1, ODOT #2, OR ANY COMBINATION AS DIRECTED BY THE OWNER. LOCATION AND AMOUNT OF THIS ITEM SHALL BE LOCATED BY THE OWNER AT THE TIME OF CONSTRUCTION ONLY AFTER THE CONTRACTOR HAS SATISFACTORILY ATTEMPTED TO DRY OUT AND WORK THE SUBGRADE. THIS ITEM INCLUDES EXCAVATION AND DISPOSAL OF UNSUITABLE MATERIAL, SUBGRADE COMPACTION, AND THE SUPPLY AND PLACEMENT OF THE ABOVE MENTIONED STRUCTURAL MATERIAL. THE QUANTITY WILL BE AS DETERMINED IN THE FIELD BASED ON SITE SUBGRADE CONDITIONS, BUT THIS ITEM COULD BE NON-PERFORMED IF DEEMED UNNECESSARY.

PAYMENT FOR ITEM 204 EXCAVATION OF SUBGRADE AND STRUCTURAL EMBANKMENT, AS PER PLAN, FOR ALL OPERATIONS DESCRIBED ABOVE SHALL BE AT THE CONTRACT CUBIC YARD BID PRICE WHICH THE CONTRACTOR SHALL PROVIDE WITH THEIR LUMP SUM BID PRICE AND SHALL INCLUDE ALL LABOR, MATERIAL AND EQUIPMENT REQUIRED TO COMPLETE THIS ITEM OF WORK.

ITEM 304 AGGREGATE BASE, AS PER PLAN

THIS ITEM OF WORK SHALL CONSIST OF THE WORK AS DESCRIBED IN OHIO DEPARTMENT OF TRANSPORTATION ITEM 304 AGGREGATE BASE, EXCEPT AS HEREIN MODIFIED.

THIS ITEM SHALL ALSO INCLUDE SATURATING THE AGGREGATE BASE WITH WATER DURING PLACEMENT OF EACH LIFT PRIOR TO COMPACTION. THIS WORK SHALL INCLUDE "PROOF ROLLING" WITH LOADED TANDEM DUMP TRUCK AS DIRECTED BY THE OWNER'S REPRESENTATIVE UNTIL NO DEFLECTION OR TIRE INDENTATION IN THE AGGREGATE SUB-BASE/BASE IS PRESENT.

PAYMENT FOR ITEM 304 AGGREGATE BASE FOR ALL OPERATIONS DESCRIBED ABOVE SHALL BE INCLUDED IN THE LUMP SUM BID PRICE AND SHALL INCLUDE ALL LABOR, MATERIAL AND EQUIPMENT REQUIRED TO COMPLETE THIS ITEM OF WORK.

ChoiceOne Engineering

App Architecture
creative focused design
615 Woodside Drive, Englewood, Ohio 45322
T 937.836.8898 F 937.832.3666
www.app-arch.com

STATE OF OHIO
ANDREW T. SHUMAN
71386
REGISTERED
PROFESSIONAL ENGINEER

MIAMI COUNTY ONE STOP CENTER
BOARD OF COMMISSIONERS FOR MIAMI COUNTY, OHIO
BARNHART ROAD, TROY, OHIO 45373

ISSUE

NO.	DATE	DESCRIPTION
1	04/08/2022	FOR CONSTRUCTION

DATE	04/08/22
JOB NO.	3923.00
DRAWN	JAC
CHECKED	ATS

COPYRIGHT © 2022 - App Architecture, Inc.

TITLE
GENERAL NOTES

SHEET NO.
C0.3

ITEM 611 SANITARY SEWER, AS PER PLAN

THIS ITEM OF WORK SHALL CONSIST OF THE WORK AS DESCRIBED IN OHIO DEPARTMENT OF TRANSPORTATION ITEM 611, PIPE CULVERTS, SEWERS AND DRAINS, EXCEPT AS HEREIN MODIFIED.

THIS WORK SHALL CONSIST OF EXCAVATION, STRUCTURAL BEDDING AND INSTALLATION OF THE NEW PVC SDR–35 SANITARY SEWER, INCLUDING ALL BEDDING, BACKFILL, COMPACTION OF BACKFILL (STRUCTURAL OR NATIVE) AND ALL TESTING PER THE PROJECT PLANS AND SPECIFICATIONS AND PER THE CITY OF TROY STANDARDS. THIS ITEM SHALL ALSO INCLUDE CONNECTION TO EXISTING SANITARY. ITEM SHALL ALSO INCLUDE DEWATERING NECESSARY FOR INSTALLATION OF SANITARY.

WHEN A NEW SANITARY SEWER MAIN CONNECTS TO AN EXISTING SEWER MAIN, A FERNCO COUPLING SHALL BE INSTALLED. THE COST OF THE COUPLING AND ASSOCIATED WORK SHALL BE INCLUDED IN THE COST OF THE PROPOSED SANITARY SEWER.

IF NEEDED, THE CONTRACTOR SHALL BE RESPONSIBLE FOR KEEPING THE EXISTING SANITARY SEWER IN SERVICE DURING THE CONNECTION OF THE NEW SANITARY SEWER. CONTRACTOR MAY NEED TO PUMP EXISTING FLOW FROM MANHOLE TO NEXT DOWNSTREAM MANHOLE DURING CONSTRUCTION. CONTRACTOR IS TO HAVE ON SITE ONE SPARE PUMP AND NECESSARY PUMP LINE IN CASE OF EMERGENCY. THE CONTRACTOR SHALL COORDINATE WITH THE CITY ON THE PROCEDURE THE CONTRACTOR WILL USE.

ALL SANITARY SYSTEM WORK, MATERIALS, PROCEDURES, INSTALLATION AND TESTING SHALL BE PER PER THE PROJECT PLANS AND SPECIFICATIONS AND PER CITY OF TROY STANDARDS.

PAYMENT OF ITEM 611, SANITARY SEWER, AS PER PLAN, FOR ALL OPERATIONS DESCRIBED ABOVE SHALL BE INCLUDED IN THE LUMP SUM BID PRICE AND SHALL INCLUDE ALL LABOR, MATERIAL AND EQUIPMENT REQUIRED TO COMPLETE THIS ITEM OF WORK.

SANITARY SYSTEM, AS PER PLAN

THIS ITEM OF WORK SHALL CONSIST OF THE WORK AS DESCRIBED IN THE NOTE ABOVE "ITEM 611 SANITARY SEWER, AS PER PLAN" BUT SHALL ALSO INCLUDE ALL WORK NEEDED TO INSTALL A COMPLETE AND FUNCTIONAL/OPERATIONAL SANITARY SYSTEM PER THE PROJECT PLANS AND SPECIFICATIONS. THIS SHALL INCLUDE ALL SANITARY SEWER PIPING, MANHOLES AND ALL WORK REQUIRED/NEEDED TO SUPPLY ALL ASPECTS OF THE SANITARY SEWER SYSTEM AND MAKE IT OPERATIONAL. THIS ITEM SHALL INCLUDE COORDINATING ALL WORK WITH THE OWNER TO ENSURE PLANT/FACILITY OPERATIONS ARE MAINTAINED, THAT ANY REQUIRED DOWNTIME OR RESTRICTION OF SITE ACCESS IS MINIMIZED AND ALL PHASING, AFTER HOURS AND WEEKEND WORK AS NEEDED TO ACCOMPLISH SUCH.

PAYMENT OF SANITARY SYSTEM, AS PER PLAN, FOR ALL OPERATIONS DESCRIBED ABOVE SHALL BE INCLUDED IN THE LUMP SUM BID PRICE AND SHALL INCLUDE ALL LABOR, MATERIAL AND EQUIPMENT REQUIRED TO COMPLETE THIS ITEM OF WORK.

ITEM 638 WATER MAIN, AS PER PLAN

THIS ITEM OF WORK SHALL CONSIST OF THE WORK AS DESCRIBED IN OHIO DEPARTMENT OF TRANSPORTATION ITEM 638 WATER MAINS AND SERVICE BRANCHES EXCEPT AS HEREIN MODIFIED.

ALL WATER SYSTEM WORK, MATERIALS, PROCEDURES, INSTALLATION, TESTING AND DISINFECTION SHALL BE PER THE PROJECT PLANS AND SPECIFICATIONS AND PER CITY OF TROY CENTER STANDARDS. THERE SHOULD BE NO REASON TO TAKE EXISTING WATER MAINS OUT OF SERVICE DURING THIS PROJECT. ALL CONNECTIONS CAN BE ACCOMPLISHED BY USING PROPER FITTINGS AND LIVE TAP METHODS. PRIOR TO CONNECTING PROPOSED WATER MAINS OR SERVICE LINES TO EXISTING WATER MAINS, THE CONTRACTOR MUST PROVIDE AT LEAST A 48 HOUR NOTICE TO THE CITY.

IF CONFLICTS ARISE IN MAINTAINING EX. WATER SERVICES, THE CONTRACTOR SHALL COORDINATE WITH THE CITY FOR THE CONTRACTOR TO SUPPLY TEMPORARY WATER SERVICES. THE CITY SHALL TAKE EXISTING WATER MAINS OUT OF SERVICE DURING SHORT PERIODS WHEN CONNECTIONS TO PROPOSED WATER MAINS ARE NECESSARY.

THIS WORK SHALL CONSIST OF EXCAVATION, BEDDING AND INSTALLING THE NEW WATER MAIN INCLUDING ALL BACKFILL. THIS ITEM SHALL ALSO INCLUDE CONNECTION AND NECESSARY SAW CUTTING TO THE EXISTING WATER MAIN. THIS ITEM SHALL ALSO INCLUDE DEWATERING NECESSARY FOR INSTALLATION OF THE WATER MAIN. PAVEMENT RESTORATION, CURB AND GUTTER AND PLAIN CONCRETE PAVEMENT AND SIDEWALK REPLACEMENT SHALL BE INCLUDED IN THIS ITEM. THE WORK SHALL INCLUDE ALL COMPACTION, ALL TESTING AND ALL DISINFECTION PER THE PROJECT PLANS AND SPECIFICATIONS AND PER CITY OF TROY STANDARDS. THIS ITEM SHALL ALSO INCLUDE ALL FITTINGS AND COUPLINGS NECESSARY TO CONNECT TO THE EXISTING WATER MAIN.

PAYMENT FOR ITEM 638 WATER MAIN FOR ALL OPERATIONS DESCRIBED ABOVE SHALL BE INCLUDED IN THE LUMP SUM BID PRICE AND SHALL INCLUDE ALL LABOR, MATERIAL AND EQUIPMENT REQUIRED TO COMPLETE THIS ITEM OF WORK.

ITEM 638 6 -INCH FIRE HYDRANT ASSEMBLY, AS PER PLAN

THIS ITEM OF WORK SHALL CONSIST OF THE WORK AS DESCRIBED IN OHIO DEPARTMENT OF TRANSPORTATION ITEM 638 WATER MAINS AND SERVICE BRANCHES EXCEPT AS HEREIN MODIFIED.

ALL FIRE HYDRANTS AND ALL RELATED WORK SHALL BE PER THE PROJECT PLANS AND SPECIFICATIONS AND PER CITY OF TROY STANDARDS AND AS DIRECTED BY THE CITY OF TROY FIRE DEPARTMENT. THE FIRE HYDRANT SHALL BE YELLOW IN COLOR. THE PUMPER NOZZLE SHALL BE FITTED WITH A 5" STORZ CONNECTION WITH CAP. THE ASSEMBLY WILL CONSIST OF THE FIRE HYDRANT AND ALL ASSOCIATED PARTS, PIPE TEE, PIPE BRANCH AND FITTINGS, A GATE VALVE WITH VALVE BOX, THRUST BLOCKING AND RESTRAINING GLANDS.

PAYMENT FOR ITEM 638 6–INCH FIRE HYDRANT ASSEMBLY, AS PER PLAN, FOR ALL OPERATIONS DESCRIBED ABOVE SHALL BE INCLUDED IN THE LUMP SUM BID PRICE AND SHALL INCLUDE ALL LABOR, MATERIAL AND EQUIPMENT REQUIRED TO COMPLETE THIS ITEM OF WORK.

ITEM 659 SEEDING AND MULCHING, CLASS 1 (LAWN MIXTURE), AS PER PLAN

THIS ITEM OF WORK SHALL CONSIST OF THE WORK AS DESCRIBED IN OHIO DEPARTMENT OF TRANSPORTATION ITEM 659, SEEDING AND MULCHING, EXCEPT AS HEREIN MODIFIED.

ALL DISTURBED AREAS OR AREAS DESIGNATED FOR SEEDING SHALL BE GRADED AND SEEDED AND SHALL HAVE A MINIMUM OF 6" OF TOPSOIL OVER THE ENTIRE AREA. TESTING THE PH OF ANY EXISTING OR IMPORTED TOPSOIL PER ODOT 659.02 SHALL BE WAIVED. THE AREA SHALL BE HAND–RAKED AND DRESSED READY FOR SEEDING. NO STONE OVER 1" IN SIZE PERMITTED IN THE TOP 6".

SEEDING AND MULCHING SHALL BE APPLIED TO ALL AREAS OF EXPOSED SOIL.

IT'S THE CONTRACTOR'S SOLE RESPONSIBILITY TO PROVIDE THE REQUIRED GERMINATION RATES AND ENSURE THE GRASS IS ESTABLISHED TO THE SATISFACTION OF THE OWNER WHICH MAY REQUIRE WATERING, REGRADING/ADDING TOPSOIL AND RESEEDING. ANY AREAS THAT HAVE ERODED OR WHERE NEW GRASS DID NOT GERMINATE SHALL BE ADDRESSED BY THE CONTRACTOR UNTIL THE AREAS ARE STABILIZED, SHAPED, AND DRAINED, AS INDICATED IN THE PLANS.

ANY DISTURBED AREA, OUTSIDE OF THE PROJECT WORK LIMITS, CAUSED BY THE CONTRACTOR'S WORK, SHALL BE RESTORED TO THE SATISFACTION OF THE PROPERTY OWNER AND PROJECT OWNER'S REPRESENTATIVE, AT THE CONTRACTOR'S SOLE EXPENSE. THIS ITEM INCLUDES: TOPSOIL, SEEDING, MULCHING, COMMERCIAL FERTILIZER, WATER, AND REPAIR SEEDING AND MULCHING.

PAYMENT FOR ITEM 659 SEEDING AND MULCHING, CLASS 1 (LAWN MIXTURE), AS PER PLAN, FOR ALL ABOVE OPERATIONS, SHALL BE INCLUDED IN THE LUMP SUM BID PRICE AND SHALL INCLUDE ALL LABOR, MATERIAL, AND EQUIPMENT REQUIRED TO COMPLETE THIS ITEM OF WORK.

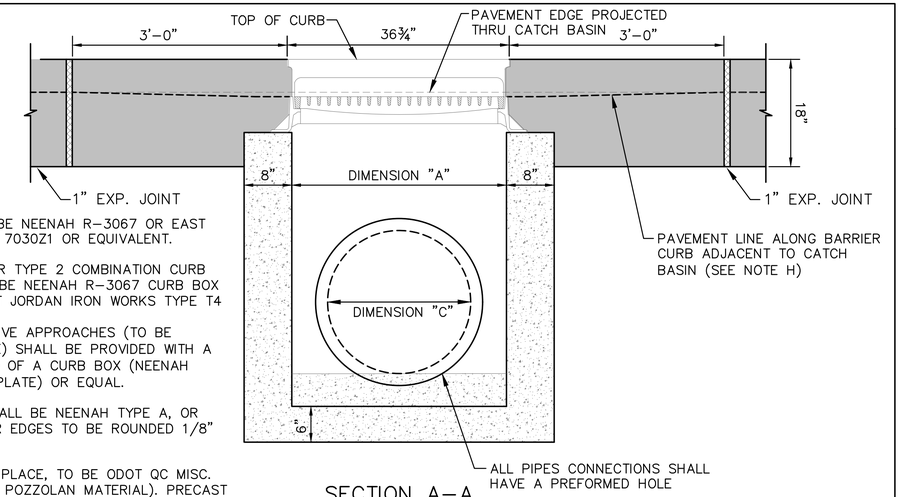

SECTION A–A

NOTES

A. INLET FRAME SHALL BE NEENAH R–3067 OR EAST JORDAN IRON WORKS 7030Z1 OR EQUIVALENT.

B. CURB BOX/HOOD, FOR TYPE 2 COMBINATION CURB AND GUTTER, SHALL BE NEENAH R–3067 CURB BOX (3" RADIUS) OR EAST JORDAN IRON WORKS TYPE T4

C. CATCH BASINS IN DRIVE APPROACHES (TO BE AVOIDED, IF POSSIBLE) SHALL BE PROVIDED WITH A CURB PLATE INSTEAD OF A CURB BOX (NEENAH R–3067 WITH CURB PLATE) OR EQUAL.

D. STANDARD GRATE SHALL BE NEENAH TYPE A, OR EQUIVALENT. ALL BAR EDGES TO BE ROUNDED 1/8" RADIUS.

E. CONCRETE, CAST–IN–PLACE, TO BE ODOT QC MISC. (CEMENT ONLY – NO POZZOLAN MATERIAL). PRECAST CONSTRUCTION IS PERMITTED AND CONCRETE SHALL MEET THE REQUIREMENTS OF 706.13.

F. F. EXPANSION JOINTS SHALL BE PER ODOT 705.03, AASHTO M153, VINYL RUBBER MATERIAL MANUFACTURED BY RIGHT/POINTE, W.R. MEADOWS, OSCODA PLASTICS OR EQUAL AND BE INSTALLED AS INDICATED IN THE DETAIL.

G. PIPE TO INTRUDE INTO CATCH BASIN 1" MAXIMUM AND PIPE MUST BE CUT PARALLEL TO CATCH BASIN. USE NON–SHRINK GROUT AROUND PIPE TO SEAL BETWEEN PIPE AND CATCH BASIN.

H. DROP FLOW LINE ½" WITHIN THE 3'–0" BLOCK OUT OF COMBINED CURB AND GUTTER WHILE KEEPING LIP OF GUTTER CONSISTENT WITH TOP OF CURB.

I. ALL GRATES SHALL BE BICYCLE SAFE.

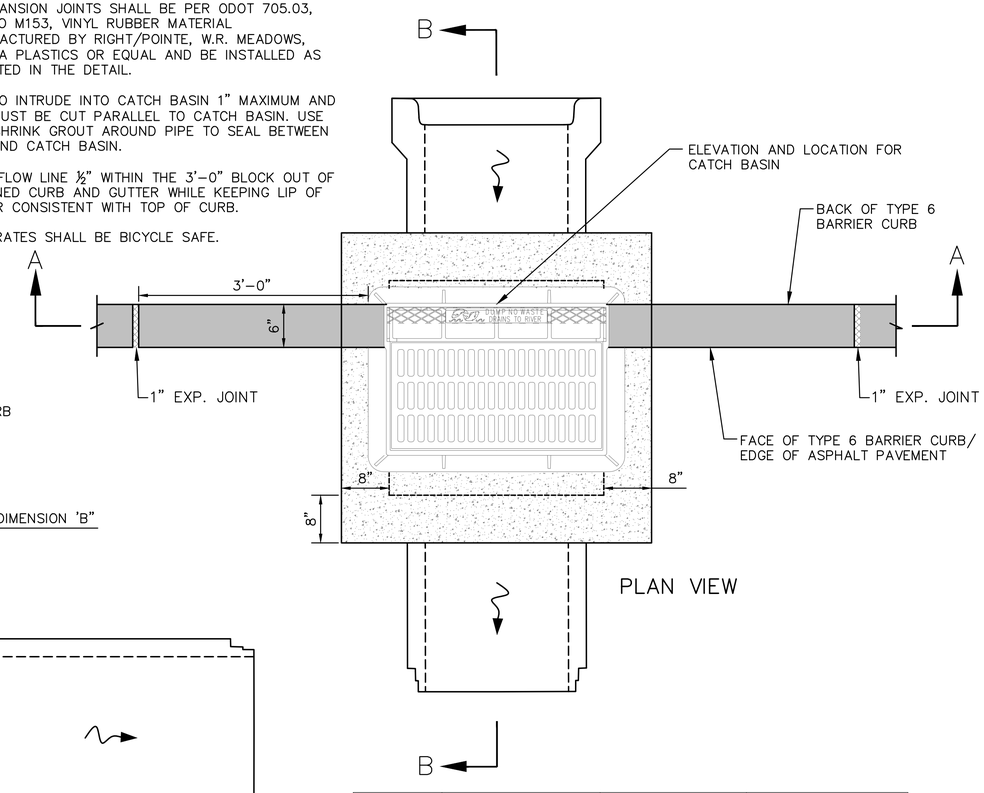

PLAN VIEW

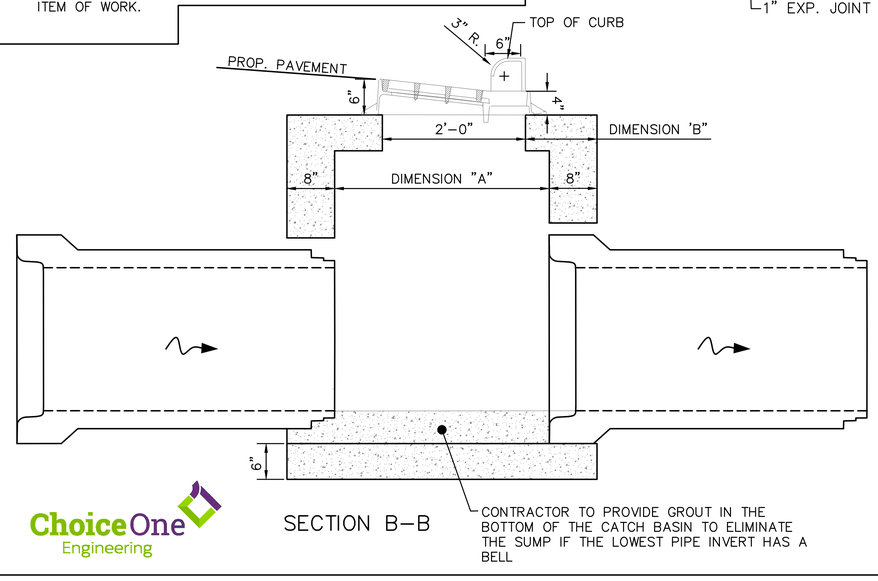

SECTION B–B

CB SIZE	DIMENSION "A"	DIMENSION "B"	DIMENSION 'C"
2–3	3'–0" x 3'–0"	14"	12" – 24"
2–4	4'–0" x 4'–0"	20"	12" – 36"
2–5	5'–0" x 5'–0"	26"	12" – 48"

2–3 CATCH BASIN WITH TYPE 1 CATCH BASIN FRAME/GRATE

ChoiceOne Engineering

App Architecture
creative focused design
615 Woodside Drive, Englewood, Ohio 45322
T 937.836.8898 F 937.832.3666
www.app-arch.com

OHIO ANDREW T. SHUMAN 71386 REGISTERED PROFESSIONAL ENGINEER

MIAMI COUNTY ONE STOP CENTER
BOARD OF COMMISSIONERS FOR MIAMI COUNTY, OHIO
BARNHART ROAD, TROY, OHIO 45373

ISSUE

NO.	DATE	DESCRIPTION
1	04/08/2022	FOR CONSTRUCTION

DATE	04/08/22
JOB NO.	3923.00
DRAWN	JAC
CHECKED	ATS

COPYRIGHT © 2022 - App Architecture, Inc.

TITLE
GENERAL NOTES

SHEET NO.
C0.4

2-2B CATCH BASIN (DETENTION BASIN) OUTLET STRUCTURE

NTS

NOTES

A. GRATE SHALL BE NEENAH CATALOG NO. R-4871 (TYPE B GRATE) OR EQUIVALENT. CONTRACTOR SHALL FASTEN/BOLT DOWN GRATE TO STRUCTURE TO ENSURE GRATE IS SECURELY FASTENED IN PLACE.

B. PRECAST STRUCTURE CONSTRUCTION IS REQUIRED, UNLESS OTHERWISE APPROVED, AND CONCRETE SHALL MEET THE REQUIREMENTS OF 706.13. CAST-IN-PLACE CONCRETE IN THE FIELD WILL BE ALLOWED FOR SUMP ELIMINATION/ANTI-FLOATATION.

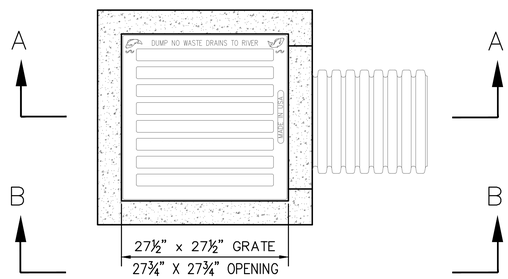

PLAN VIEW

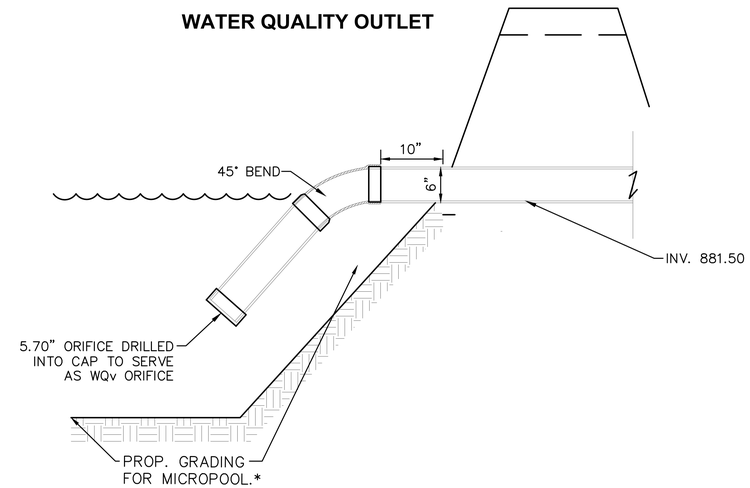

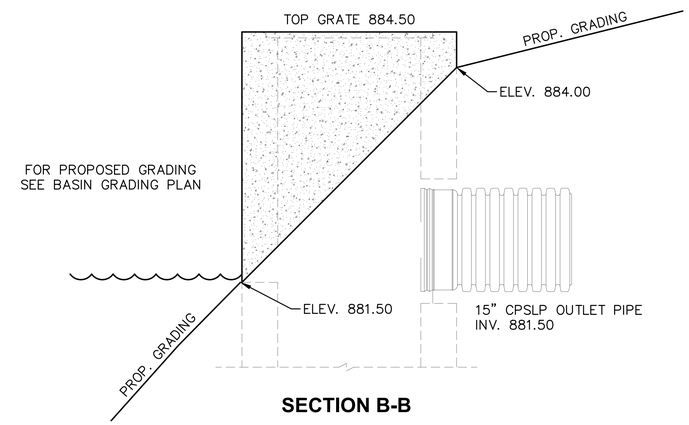

SECTION B-B

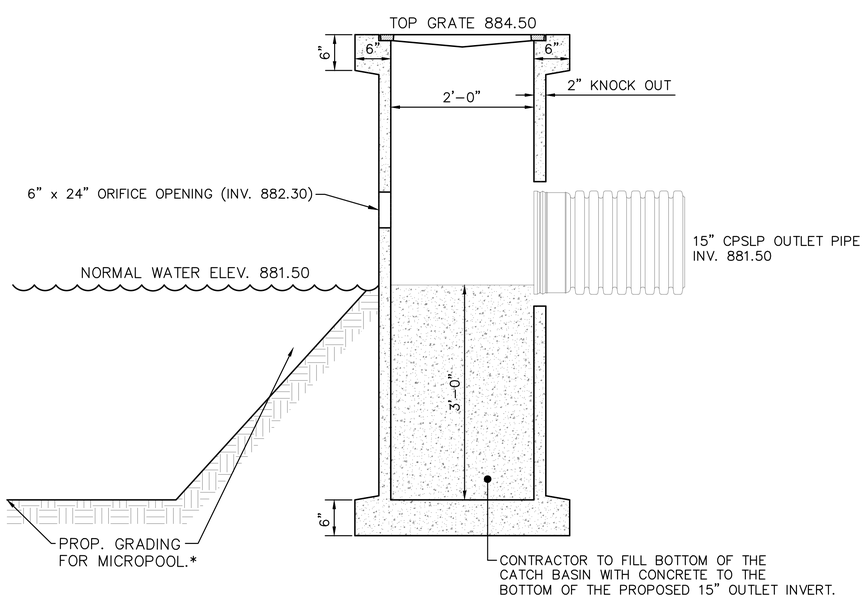

SECTION A-A

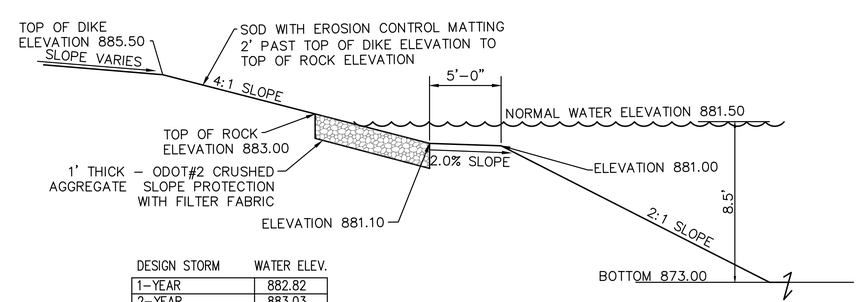

DESIGN STORM	WATER ELEV.
1-YEAR	882.82
2-YEAR	883.03
5-YEAR	883.42
10-YEAR	883.71
25-YEAR	884.01
50-YEAR	884.32
100-YEAR	884.57

RETENTION POND TYPICAL SECTION

ChoiceOne Engineering

App Architecture
creative focused design
615 Woodside Drive, Englewood, Ohio 45322
T 937.836.8898 F 937.832.3666
www.app-arch.com

OHIO ANDREW T. SHUMAN 71386 REGISTERED PROFESSIONAL ENGINEER

MIAMI COUNTY ONE STOP CENTER
BOARD OF COMMISSIONERS FOR MIAMI COUNTY, OHIO
BARNHART ROAD, TROY, OHIO 45373

ISSUE

NO.	DATE	DESCRIPTION
1	04/08/2022	FOR CONSTRUCTION

DATE	04/08/22
JOB NO.	3923.00
DRAWN	JAC
CHECKED	ATS

COPYRIGHT © 2022 - App Architecture, Inc.

TITLE
GENERAL DETAILS

SHEET NO.
C0.5

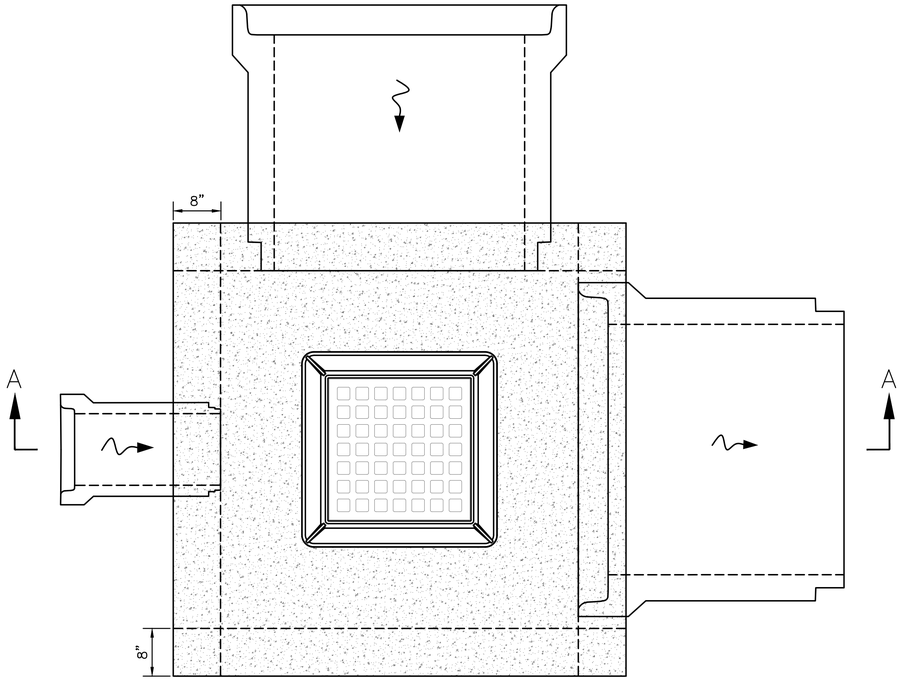

PLAN VIEW

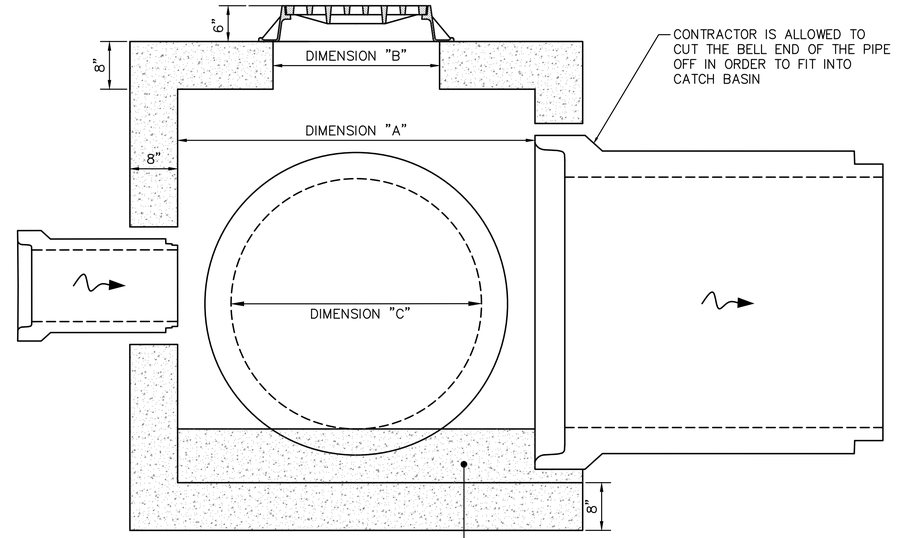

SECTION A–A

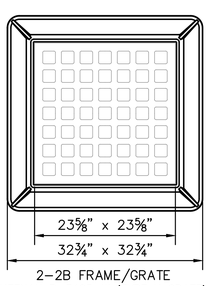

2–2B FRAME/GRATE
NEENAH R–3405–W (TYPE H GRATE)
EJIW NO. 5250 (TYPE M GRATE)

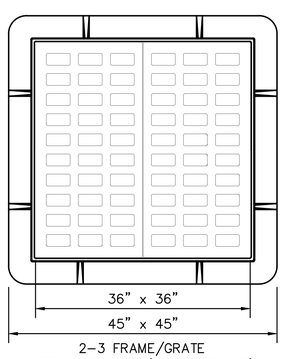

2–3 FRAME/GRATE
NEENAH R–3437 (TYPE C GRATE)

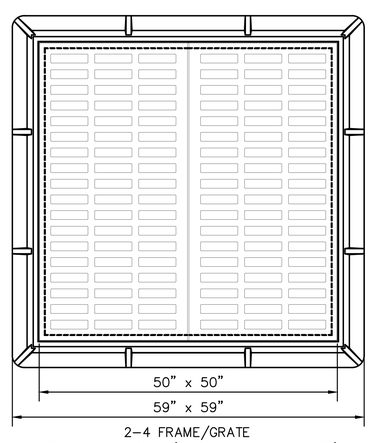

2–4 FRAME/GRATE
NEENAH R–3438–A (2 PIECE TYPE A GRATE)

CB SIZE	DIMENSION "A"	DIMENSION "B"	DIMENSION 'C"
2–3	3'–0" x 3'–0"	2'–0" x 2'–0" (2–2B GRATE) 3'–0" x 3'–0" (2–3 GRATE)	12" – 24"
2–4	4'–0" x 4'–0"	2'–0" x 2'–0" (2–2B GRATE) 3'–0" x 3'–0" (2–3 GRATE) 4'–0" x 4'–0" (2–4 GRATE)	12" – 36"
2–5	5'–0" x 5'–0"	2'–0" x 2'–0" (2–2B GRATE) 3'–0" x 3'–0" (2–3 GRATE) 4'–0" x 4'–0" (2–4 GRATE)	12" – 48"
2–6	6'–0" x 6'–0"	2'–0" x 2'–0" (2–2B GRATE) 3'–0" x 3'–0" (2–3 GRATE) 4'–0" x 4'–0" (2–4 GRATE)	12" – 54"
2–7	7'–0" x 7'–0"	2'–0" x 2'–0" (2–2B GRATE) 3'–0" x 3'–0" (2–3 GRATE) 4'–0" x 4'–0" (2–4 GRATE)	12" – 66"

NOTES

A. LOCATION AND ELEVATIONS WHEN GIVEN ON THE PLANS IS TOP CENTER OF THE GRATE.

B. FRAME AND GRATE FOR PAVED AREAS SHALL BE NEENAH CATALOG NO. R–3405 OR EAST JORDAN IRON WORKS NO. 5250 OR EQUIVALENT. CONTRACTOR SHALL FASTEN/BOLT DOWN GRATE TO BASIN TO ENSURE GRATE IS SECURELY FASTENED IN PLACE.

C. REINFORCING STEEL BAR # AND SPACING IN TOP SLAB SHALL FOLLOW ODOT SCD CB–1.2/1.3.

D. PRECAST CONSTRUCTION IS REQUIRED, UNLESS OTHERWISE APPROVED, AND CONCRETE SHALL MEET THE REQUIREMENTS OF 706.13.

E. PIPE TO INTRUDE INTO CATCH BASIN 1" MAXIMUM AND PIPE MUST BE CUT PARALLEL TO CATCH BASIN. USE NON–SHRINK GROUT AROUND PIPE TO SEAL BETWEEN PIPE AND CATCH BASIN.

2–3, 2–4 CATCH BASINS (IN PAVEMENT AREAS)

NTS

ChoiceOne Engineering

App Architecture
creative focused design
625 Woodside Drive, Englewood, Ohio 45322
T 937.836.8898 F 937.832.3696
www.app-arch.com

OHIO ANDREW T. SHUMAN 71386 REGISTERED PROFESSIONAL ENGINEER

MIAMI COUNTY ONE STOP CENTER
BOARD OF COMMISSIONERS FOR MIAMI COUNTY, OHIO
BARNHART ROAD, TROY, OHIO 45373

ISSUE

NO.	DATE	DESCRIPTION
1	04/08/2022	FOR CONSTRUCTION

DATE	04/08/22
JOB NO.	3923.00
DRAWN	JAC
CHECKED	ATS

COPYRIGHT © 2022 - App Architecture, Inc.

TITLE
GENERAL DETAILS

SHEET NO.
C0.6

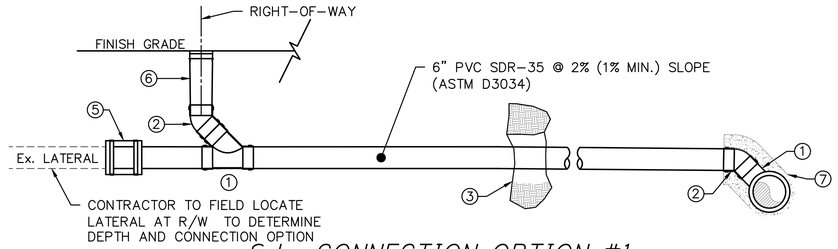

S.L. CONNECTION OPTION #1

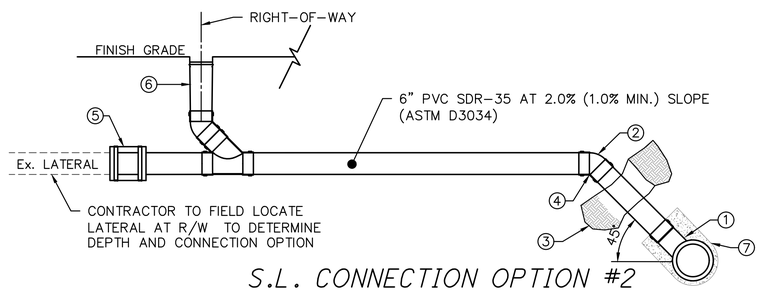

S.L. CONNECTION OPTION #2

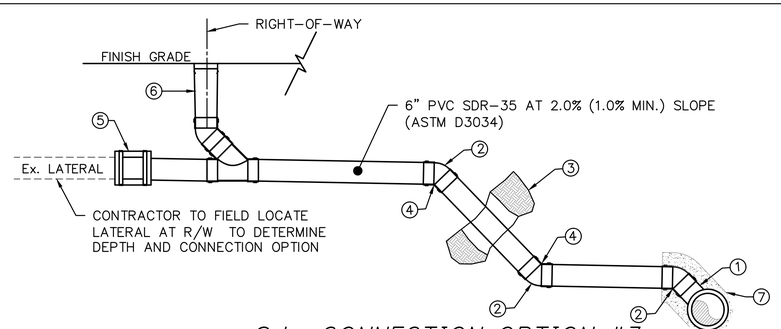

S.L. CONNECTION OPTION #3

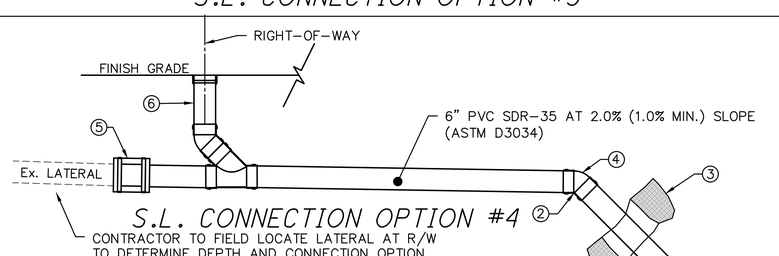

S.L. CONNECTION OPTION #4

1. WYE-ROTATED 45° FROM HORIZONTAL UNLESS OTHERWISE SPECIFIED.
2. 45° FITTING.
3. STRUCTURAL BACKFILL FOR BEDDING FOR ALL SANITARY AND STORM LATERALS SHALL BE WASHED NATIVE GRAVEL, PER ODOT 703.11, TYPE 3 (#57, #67). BEDDING SHALL BE PLACED FROM 4" BELOW TO 8" ABOVE THE LATERAL.
4. EXACT RECORD OF BEND LOCATIONS MUST BE MADE, AS TO DEPTH FROM SURFACE AND DISTANCE FROM CENTERLINE OF SEWER, BEFORE BACKFILL IS PLACED.
5. CONNECT TO EXISTING SANITARY LATERAL BEHIND SIDEWALK OR AS SHOWN IN THE PLANS. CONNECTION TO BE MADE WITH FERNCO COUPLINGS WITH STAINLESS STEEL BANDS, EACH SIDE, OR OTHER FITTINGS APPROVED BY THE **MUNICIPALITY**.
6. PROVIDE A CLEANOUT FOR EVERY LATERAL AT THE LOCATIONS SHOWN ON THE PLANS.
7. CONCRETE ENCASEMENT AND BLOCKING REQUIRED IF DEPTH OF CONNECTION IS 12' OR GREATER. CONCRETE SHALL BE 4" MIN. THICKNESS AROUND THE MAIN SEWER AND 6" MIN. THICKNESS AROUND THE LATERAL.

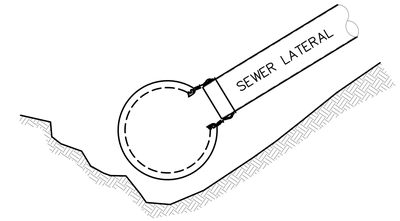

SECTION A–A

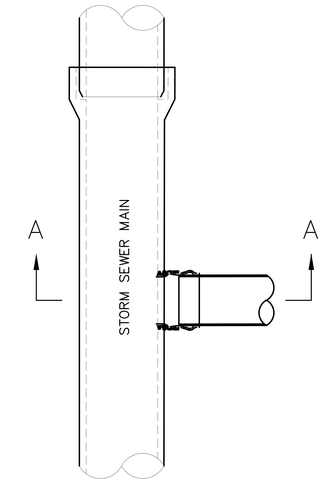

NOTES

A. THE INSERTA TEE GASKETED CONNECTION FITTING TYPE SHALL MATCH THE STORM SEWER MAIN MATERIAL AND BE MANUFACTURED BY FOWLER MANUFACTURING OR EQUAL.

B. RECOMMEND CUTTING HOLE WITH A HOLE SAW FOR PVC PIPE AND A DIAMOND BIT FOR CONCRETE OR CLAY PIPE. THE HOLE SAW SIZE SHOULD FOLLOW THE MANUFACTURERS RECOMMENDATIONS. CONTRACTOR IS RESPONSIBLE TO FIX ANY LOOSE CONNECTIONS DUE TO IMPROPER HOLE SIZE.

C. INSERTA TEES SHALL BE USED WHEREVER POSSIBLE AND BE INSTALLED PER MANUFACTURER'S RECOMMENDATIONS.

INSERTA TEE (LATERAL TO MAIN) CONNECTION

NTS

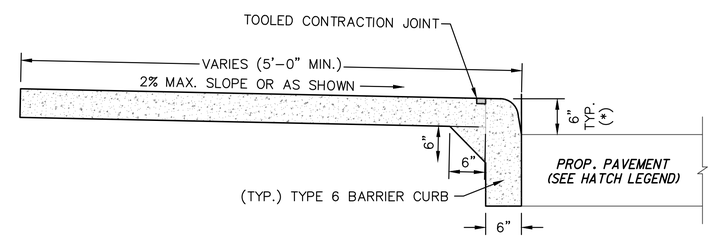

NOTES

A. WALK TO BE POURED ON 4" MINIMUM ODOT #304 OR ODOT #411 AGGREGATE.

B. PROVIDE EDGING AND BROOM FINISH TO ALL EXPOSED SURFACES.

C. CONCRETE SHALL CONFORM TO ODOT ITEM 499 CONCRETE AND WORK SHALL CONFORM TO ODOT ITEM 608, UNLESS OTHERWISE SPECIFIED WITHIN.

D. USE WHITE PIGMENTED CURING COMPOUND IMMEDIATELY AFTER FINISHING SURFACES. ANY OTHER METHOD OR TYPE OF CURING COMPOUND MUST BE PREAPPROVED.

E. ALL CONCRETE SHALL BE ODOT QC MISC. (CEMENT ONLY – NO POZZOLAN MATERIAL).

F. PROPOSED CONCRETE SIDEWALK SHALL BE JOINTED AS CLOSE TO SQUARE AS POSSIBLE. JOINT SPACING MAY VARY SLIGHTLY DEPENDING ON THE LENGTH AND WIDTH OF THE PROPOSED SIDEWALK AREAS. JOINT SPACING SHALL TYPICALLY RANGE FROM 4'X4' TO 10'X10'. IN ALL CASES THE SIDEWALK SHALL BE JOINTED SO THAT THE MAXIMUM ASPECT RATIO (OF PANEL LENGTH TO WIDTH) OF THE JOINTING IS 1.25:1 OR LESS. CONTRACTOR TO VERIFY METHOD AND TYPE OF CONTROL JOINTING WITH OWNER PRIOR TO PERFORMING WORK.

G. CURB/SIDEWALK SHALL HAVE EXPANSION JOINTS EVERY 100'.

H. CONCRETE TO INCLUDE 3 LBS/CY OF EITHER EUCLID CHEMICAL TUFSTRAND SF, FORTA FERRO SYNTHETIC MACROFIBERS OR APPROVED EQUIVALENT MEETING ASTM C 1116 TYPE 3, MINIMUM 2" LENGTH, ASPECT RATIO 50 TO 90. CONTRACTOR SHALL CONTACT THE FIBER MANUFACTURER'S SUPPLIER 48 HOURS PRIOR TO ORDERING THE FIRST BATCH OF CONCRETE FOR APPROPRIATE MIXING AND FINISHING PROCEDURES.

COMBINED CURB AND WALK

NTS

ChoiceOne Engineering

App Architecture
creative focused design
615 Woodside Drive, Englewood, Ohio 45322
T 937.836.8898 F 937.832.3666
www.app-arch.com

OHIO ANDREW T. SHUMAN 71386 REGISTERED PROFESSIONAL ENGINEER

MIAMI COUNTY ONE STOP CENTER
BOARD OF COMMISSIONERS FOR MIAMI COUNTY, OHIO
BARNHART ROAD, TROY, OHIO 45373

ISSUE

NO.	DATE	DESCRIPTION
1	04/08/2022	FOR CONSTRUCTION

DATE	04/08/22
JOB NO.	3923.00
DRAWN	JAC
CHECKED	ATS

COPYRIGHT © 2022 - App Architecture, Inc.

TITLE
GENERAL DETAILS

SHEET NO.
C0.7

NUMBER OF PARKING SPACE REQUIREMENTS	
TOTAL NUMBER OF PARKING SPACES PROVIDED	MINIMUM NUMBER OF REQUIRED ACCESSIBLE PARKING SPACES
1 TO 25	1
26 TO 50	2
51 TO 75	3
76 TO 100	4
101 TO 150	5
151 TO 200	6
201 TO 300	7
301 TO 400	8
401 TO 500	9
501 TO 1000	2 PERCENT OF TOTAL
1001 AND OVER	20, PLUS 1 FOR EACH 100, OR FRACTION THEREOF, OVER 1000
NOTE: ONE OUT OF EVERY (6) ACCESSIBLE PARKING SPACES, BUT NOT LESS THEN ONE, IS REQUIRED TO BE VAN ACCESSIBLE	

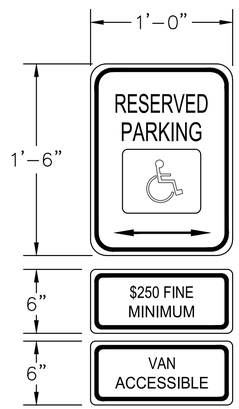

NOTES

A. SIGNS: "RESERVED PARKING" SIGN (USDOT STANDARD R7-8 SIGN). THIS IS A STANDARD SIGN AND MAY BE ORDERED FROM ANY TRAFFIC SIGN SUPPLIER BY NUMBER. THE SIGN MUST BE SUPPLEMENTED WITH A "$250 FINE MINIMUM" SIGN (USDOT STANDARD R7-H8b SIGN) AND A "VAN ACCESSIBLE" SIGN (USDOT STANDARD R7-8a SIGN) AS APPLICABLE. CONFIRM WITH LOCAL REGULATIONS.

B. A U.S. DEPARTMENT OF TRANSPORTATION R7-8 (RESERVED PARKING) AND SUPPLEMENTAL SIGNS AS NOTED ABOVE MUST BE MOUNTED ON A PERMANENT POST SO THAT THE LOWER EDGE OF THE BOTTOM MOST SIGN IS AT LEAST FIVE FEET ABOVE THE PAVEMENT/GROUND. THE POST MUST BE MOUNTED IN THE CENTER OF THE ADA ACCESSIBLE PARKING SPACE, NO MORE THAN FIVE FEET FROM THE FRONT OF THE PARKING SPACE. ONE SIGN REQUIRED FOR EACH ACCESSIBLE PARKING SPACE. ALL WORK SHALL CONFORM WITH ALL FEDERAL, STATE AND LOCAL AMERICANS WITH DISABILITIES ACT (ADA) REGULATIONS AND STANDARDS AND LOCAL ACCESSIBILITY CODE.

C. ALL HANDICAP PARKING SPACES MUST ALSO HAVE A PAINTED INTERNATIONAL SYMBOL OF ACCESSIBILITY CENTERED IN THE PARKING STALL.

A.D.A. RESERVED PARKING SIGN

NTS

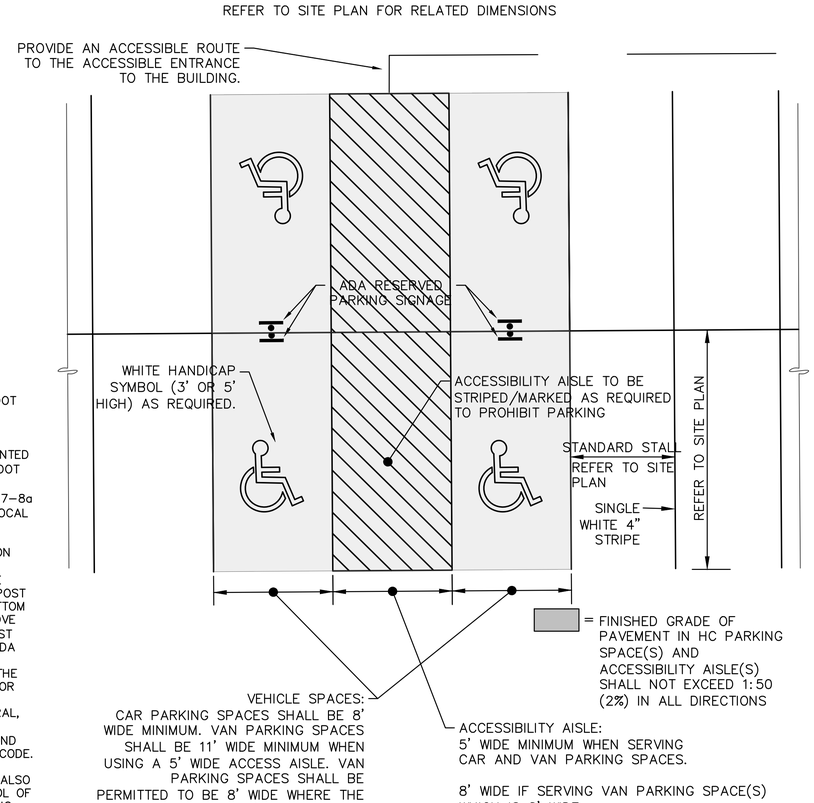

NOTES:

THE MINIMUM COMBINED WIDTH FOR A VAN PARKING SPACE AND ACCESSIBILITY AISLE IS 16' WIDE.

THE MINIMUM COMBINED WIDTH FOR A CAR PARKING SPACE AND ACCESSIBILITY AISLE IS 13' WIDE.

TYPICAL HANDICAP PARKING SPACE AND STRIPING PLAN

(FOR REFERENCE ONLY) - NTS

SITE ACCESSIBILITY NOTES

A. REFER TO SITE PLAN FOR EXACT LOCATION OF HANDICAP PARKING, ACCESSIBILITY AISLES, WALKWAYS AND RAMPS.

B. ALL WALKWAYS, RAMPS, AND HANDICAP PARKING SIGNAGE, ETC. SHALL COMPLY WITH AND MEET APPROVED AMERICANS WITH DISABILITIES ACT (ADA) STANDARDS AND LOCAL ACCESSIBILITY CODE.

C. ONE OUT OF EVERY SIX (6) ACCESSIBLE PARKING SPACES, BUT NOT LESS THAN ONE, IS REQUIRED TO BE VAN ACCESSIBLE.

D. ACCESSIBLE RAMPS: REFER TO SITE PLAN FOR TYPE/STYLE OF HANDICAP RAMP(S).

E. FINISHED GRADES OF PAVEMENT IN HC PARKING AND ACCESSIBILITY AISLE SHALL NOT EXCEED 1:50 SLOPE IN ANY DIRECTION.

HANDICAP ACCESSIBILITY ROUTE NOTES

ALL ACCESSIBILITY ROUTES SHALL COMPLY WITH AND MEET APPROVED AMERICANS WITH DISABILITIES ACT (ADA) STANDARDS AND LOCAL ACCESSIBILITY CODE.

A. ACCESSIBLE ROUTES MUST CONNECT HC PARKING SPACES TO ACCESSIBLE ENTRANCES.

B. ACCESSIBLE ROUTES SHALL CONSIST OF ONE OR MORE OF THE FOLLOWING COMPONENTS: WALKING SURFACES WITH A RUNNING SLOPE NOT STEEPER THAN 1:20, RAMPS AND CURB RAMPS EXCLUDING THE FLARED SIDES. ALL COMPONENTS OF AN ACCESSIBLE ROUTE SHALL COMPLY WITH THE APPLICABLE ADA REQUIREMENTS.

C. THE PREFERRED LOCATION FOR ACCESSIBLE ROUTES IS IN FRONT OF THE PARKED VEHICLES.

D. HC PARKING ACCESS AISLES MUST JOIN TO AN ACCESSIBLE ROUTE.

E. WHEN ACCESSIBLE ROUTES CROSS VEHICULAR TRAVEL LANES, MARK THE CROSSINGS TO ENHANCE PEDESTRIAN SAFETY.

F. ENSURE THE CLEAR WIDTH OF THE ACCESSIBLE ROUTE IS NOT OBSTRUCTED. IF NEEDED, INSTALL PARKING BLOCKS ON PARKING STALLS TO PREVENT VEHICLE OVERHANGS FROM REDUCING THE CLEAR WIDTH OF THE ACCESSIBLE ROUTE.

HANDICAP RAMP GENERAL NOTES

ALL RAMPS SHALL COMPLY WITH AND MEET APPROVED AMERICANS WITH DISABILITIES ACT (ADA) STANDARDS AND LOCAL ACCESSIBILITY CODE.

RAMPS:

A. SLOPE: RAMP RUNS SHALL HAVE A RUNNING SLOPE NOT STEEPER THAN 13:1.

B. CROSS SLOPE: CROSS SLOPE OF RAMP RUNS SHALL NOT BE STEEPER THAN 64:1.

C. CLEAR WIDTH: THE CLEAR WIDTH OF A RAMP RUN AND, WHERE HANDRAILS ARE PROVIDED, THE CLEAR WIDTH BETWEEN HANDRAILS SHALL BE 36" MINIMUM.

D. RISE: THE RISE FOR ANY RAMP RUN SHALL BE 30" MAXIMUM.

E. HANDRAILS: RAMP RUNS WITH A RISE GREATER THAN 6" SHALL HAVE ADA COMPLIANT HANDRAILS.

F. EDGE PROTECTION: ADA COMPLIANT EDGE PROTECTION SHALL BE PROVIDED ON EACH SIDE OF RAMP RUNS AND AT EACH RAMP LANDING.

RAMP LANDINGS:

A. RAMPS SHALL HAVE LANDINGS AT THE TOP AND BOTTOM OF EACH RAMP RUN.

B. SLOPE: LANDINGS SHALL BE RELATIVITY LEVEL WITH SLOPES NOT STEEPER THAN 64:1 IN ANY DIRECTION.

C. WIDTH: THE LANDING CLEAR WIDTH SHALL BE AT LEAST AS WIDE AS THE WIDEST RAMP RUN LEADING TO THE LANDING.

D. LENGTH: THE LANDING CLEAR LENGTH SHALL BE 60" LONG MINIMUM.

E. CHANGE IN DIRECTION: RAMPS THAT CHANGE DIRECTION BETWEEN RUNS AT LANDINGS SHALL HAVE A CLEAR LANDING 60" X 60" MINIMUM.

HANDICAP CURB RAMP NOTES:

ALL RAMPS SHALL COMPLY WITH AND MEET APPROVED AMERICANS WITH DISABILITIES ACT (ADA) STANDARDS AND LOCAL ACCESSIBILITY CODE.

A. SLOPE: RAMP SHALL HAVE A RUNNING SLOPE NOT STEEPER THAN 13:1.

B. COUNTER SLOPE: COUNTER SLOPES OF ADJOINING GUTTERS AND ROAD SURFACES IMMEDIATELY ADJACENT TO THE CURB RAMP SHALL NOT BE STEEPER THAN 1:20. THE ADJACENT SURFACES AT TRANSITIONS AT CURB RAMPS TO WALKS, GUTTERS, AND STREETS SHALL BE AT THE SAME LEVEL. THE COUNTER SLOPE OF THE GUTTER OR STREET AT THE FOOT OF A CURB RAMP, LANDING, OR BLENDED TRANSITIONS SHALL BE 20:1 OR FLATTER.

C. SIDES OF CURB RAMPS: WHERE PROVIDED, CURB RAMP FLARES SHALL NOT BE STEEPER THAN 1:10.

D. LANDINGS: LANDINGS SHALL BE PROVIDED AT THE TOPS OF CURB RAMPS. RAMP LANDINGS SHALL BE 4' MIN. X 4' MIN. (5'X5' PREFERRED) WITH A 64:1 OR FLATTER CROSS SLOPE AND RUNNING SLOPE. WHILE RAMPS MAY BE SKEWED TO THE CROSSWALK, THE ENTIRE LOWER LANDING AREA MUST FALL WITHIN THE CROSS WALK THAT THE RAMP SERVES AND CANNOT BE LOCATED IN THE TRAVELED LANE OF OPPOSING TRAFFIC. THE BOTTOM EDGE OF THE RAMP SHALL CHANGE PLANES PERPENDICULAR TO THE LANDING. THE EDGE OF THE CURB SHALL BE FLUSH WITH THE EDGE OF THE ADJACENT PAVEMENT AND GUTTER AND SURFACE SLOPES THAT MEET GRADE BREAKS SHALL ALSO BE FLUSH.

E. LOCATION: CURB RAMPS AND THE FLARED SIDES OF CURB RAMPS SHALL BE LOCATED SO THAT THEY DO NOT PROJECT INTO VEHICULAR TRAFFIC LANES, PARKING SPACES, OR PARKING ACCESS AISLES. CURB RAMPS AT MARKED CROSSINGS SHALL BE WHOLLY CONTAINED WITHIN THE MARKINGS, EXCLUDING ANY FLARED SIDES.

F. DIAGONAL CURB RAMPS: DIAGONAL OR CORNER TYPE CURB RAMPS WITH RETURNED CURBS OR OTHER WELL-DEFINED EDGES SHALL HAVE THE EDGES PARALLEL TO THE DIRECTION OF PEDESTRIAN FLOW. THE BOTTOM OF DIAGONAL CURB RAMPS SHALL HAVE A CLEAR SPACE 48 INCHES MINIMUM OUTSIDE ACTIVE TRAFFIC LANES OF THE ROADWAY. DIAGONAL CURB RAMPS PROVIDED AT MARKED CROSSINGS SHALL PROVIDE THE 48 INCHES MINIMUM CLEAR SPACE WITHIN THE MARKINGS. DIAGONAL CURB RAMPS WITH FLARED SIDES SHALL HAVE A SEGMENT OF CURB 24 INCHES LONG MINIMUM LOCATED ON EACH SIDE OF THE CURB RAMP AND WITHIN THE MARKED CROSSING.

G. ISLANDS: RAISED ISLANDS IN CROSSINGS SHALL BE CUT THROUGH LEVEL WITH THE STREET OR HAVE CURB RAMPS AT BOTH SIDES. EACH CURB RAMP SHALL HAVE A LEVEL AREA 48 INCHES LONG MINIMUM BY 36 INCHES WIDE MINIMUM (48" PREFERRED) AT THE TOP OF THE CURB RAMP IN THE PART OF THE ISLAND INTERSECTED BY THE CROSSINGS. EACH 48 INCH MINIMUM BY 36 INCH MINIMUM (48" PREFERRED) AREA SHALL BE ORIENTED SO THAT THE 48 INCH MINIMUM LENGTH IS IN THE DIRECTION OF THE RUNNING SLOPE OF THE CURB RAMP IT SERVES. THE 48 INCH MINIMUM BY 36 INCH MINIMUM (48" PREFERRED) AREAS AND THE ACCESSIBLE ROUTE SHALL BE PERMITTED TO OVERLAP.

H. DRAINAGE: CONTRACTOR IS TO ENSURE THE BASE OF EACH CONSTRUCTED CURB RAMP ALLOWS FOR PROPER DRAINAGE, WITHOUT EXCEEDING ALLOWABLE CROSS SLOPE OR RAMP VERTICAL CHANGE IN LEVEL EXCEEDING ⅛" BETWEEN THE 1) PAVEMENT AND GUTTER, AND 2) GUTTER AND RAMP, ARE NOT ALLOWED.

I. SURFACE TEXTURE: TEXTURE CONCRETE SURFACES BY COARSE BROOMING TRANSVERSE TO THE RAMP SLOPES TO BE ROUGHER THAN THE ADJACENT WALK.

J. JOINTS: PROVIDE EXPANSION JOINTS IN THE CURB RAMP AS EXTENSIONS OF WALK JOINTS AND CONSISTENT WITH ITEM 608.03 REQUIREMENTS FOR A NEW CONCRETE WALK. PROVIDE A 1/2" ITEM 705.03 EXPANSION JOINT FILLER AROUND THE EDGE OF RAMPS BUILT IN EXISTING CONCRETE WALKS. LINES SHOWN ON THIS DRAWING INDICATE THE RAMP EDGES AND SLOPE CHANGES, AND DO NOT NECESSARILY INDICATE JOINT LINES.

K. EXISTING SIDEWALKS: IN EXISTING SIDEWALKS, WHERE THE MAXIMUM RAMP SLOPE (13:1) IS NOT FEASIBLE DUE TO SITE CONSTRAINTS (E.G. UTILITY POLES OR VAULTS, RIGHT-OF-WAY LIMITS) IT MAY BE REDUCED AS FOLLOWS:

10:1 FOR A MAX. RISE OF 6",
8:1 FOR A MAX. RISE OF 3",
6:1 OVER A MAX. RUN OF 2'-0" FOR HISTORIC AREAS WHERE A FLATTER SLOPE IS NOT FEASIBLE.

TO PREVENT CHASING THE GRADE INDEFINITELY, THE TRANSITION FROM EXISTING SIDEWALK TO THE SHADED CURB RAMP AREA IS NOT REQUIRED TO EXCEED 15 FEET IN LENGTH.

DETECTABLE WARNINGS, IF REQUIRED:

A. INSTALL DETECTABLE WARNING ON CURB RAMP WITH APPROVED MATERIALS. THE DETECTABLE WARNING SHALL EXTEND THE FULL WIDTH OF THE CURB RAMP (EXCLUSIVE OF FLARED SIDES) AND SHALL EXTEND EITHER THE FULL DEPTH OF THE CURB RAMP OR 24 INCHES DEEP MINIMUM MEASURED FROM THE BACK OF THE CURB ON THE RAMP SURFACE.

B. INSTALL ALL PROPRIETARY PRODUCTS AS PER MANUFACTURER'S WRITTEN INSTRUCTIONS.

C. THE DEPTH OF CONCRETE UNDERNEATH DETECTABLE WARNING PRODUCTS SHALL BE A MINIMUM OF 4" THICK.

D. COLOR OF DETECTABLE WARNINGS SHOULD CONTRAST WITH SURROUNDING CONCRETE WALK AND RAMP (BLACK IS NOT AN ACCEPTABLE COLOR).

Choice One Engineering

App Architecture
creative focused design
615 Woodside Drive, Englewood, Ohio 45322
T 937.836.8898 F 937.832.3666
www.app-arch.com

STATE OF OHIO ANDREW T. SHUMAN 71386 REGISTERED PROFESSIONAL ENGINEER

MIAMI COUNTY ONE STOP CENTER
BOARD OF COMMISSIONERS FOR MIAMI COUNTY, OHIO
BARNHART ROAD, TROY, OHIO 45373

ISSUE

NO.	DATE	DESCRIPTION
1	04/08/2022	FOR CONSTRUCTION

DATE	04/08/22
JOB NO.	3923.00
DRAWN	JAC
CHECKED	ATS

COPYRIGHT © 2022 - App Architecture, Inc.

TITLE
GENERAL DETAILS

SHEET NO.
C0.8

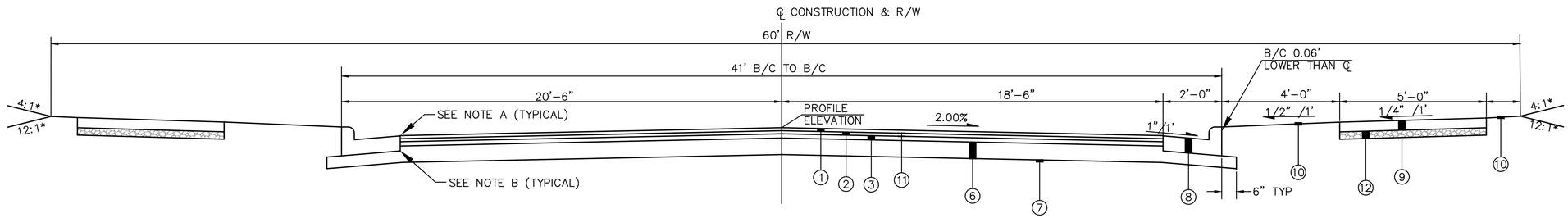

TYPICAL SECTION

JAN COURT STA. 11+10.00 TO STA. 15+50.87 = 440.87'

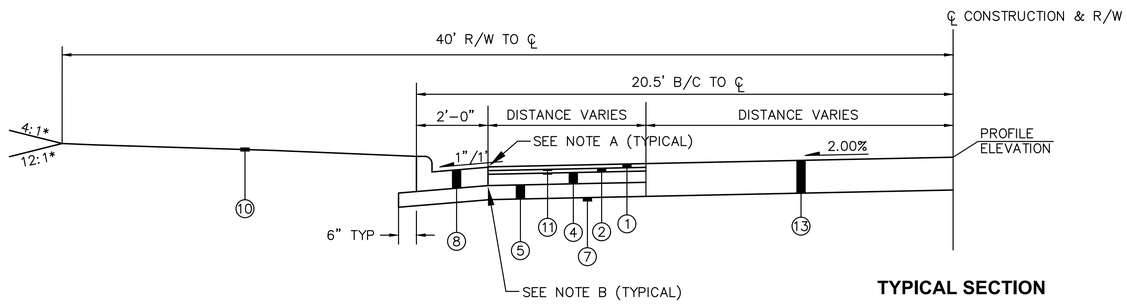

TYPICAL SECTION

BARNHART STREET STA. = 419'

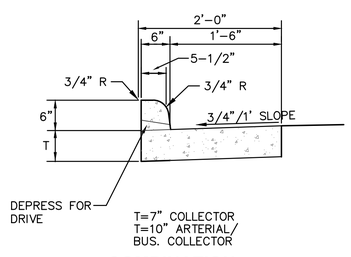

COMBINATION CURB AND GUTTER

MANHOLES AND WATER VALVE BOXES SHALL BE INITIALLY SET TO TOP OF INTERMEDIATE COURSE AND THEN ADJUSTED TO GRADE PRIOR TO SURFACE COURSE TO ALLOW FOR SNOW PLOWING OVER THE WINTER SEASON. MONUMENT BOXES SHALL BE SET AFTER THE INTERMEDIATE COURSE IS PLACED BUT JUST PRIOR TO THE SURFACE COURSE INSTALLATION.

LEGEND

1. ITEM 448 – 1 1/4" ASPHALT CONCRETE, SURFACE COURSE, TYPE 1, PG 64–22
2. ITEM 448 – 1 3/4" ASPHALT CONCRETE, INTERMEDIATE COURSE, TYPE 2, PG 64–22
3. ITEM 301 – 3" ASPHALT CONCRETE BASE
4. ITEM 301 – 7" ASPHALT CONCRETE BASE
5. ITEM 304 – 6" AGGREGATE BASE (2 EQUAL LIFTS; SATURATE WITH WATER BETWEEN LIFTS)
6. ITEM 304 – 9" AGGREGATE BASE (2 EQUAL LIFTS; SATURATE WITH WATER BETWEEN LIFTS)
7. ITEM 204 – SUBGRADE COMPACTION
8. ITEM 609 – COMBINATION CURB AND GUTTER
9. ITEM 608 – 4" CONCRETE WALK
   CONCRETE MUST BE 8" THICK THRU DRIVES
10. ITEM 659 – SEEDING AND MULCHING
11. ITEM 407 – TACK COAT (APPLIED AT THE RATE OF 0.10 GALLONS PER SQUARE YARD)
12. ITEM 411 – 4" CRUSHED AGGREGATE
13. EXISTING PAVEMENT

NOTE A

ITEM 448 ASPHALT SURFACE COURSE IS TO BE 1/4" ABOVE GUTTER PLATE.

NOTE B

ASPHALT CEMENT ON FACE OF CURB PRIOR TO ASPHALT PLACEMENT AND SEAL BETWEEN CURB AND PAVEMENT AFTER PLACEMENT OF ITEM 448 ASPHALT, INCIDENTAL TO ITEM 448 ASPHALT CONCRETE.

CURB AND GUTTER NOTES

A. CONCRETE AND WORK SHALL MEET THE REQUIREMENTS SET FORTH IN ODOT ITEM 609 CURBING.
B. CURBING SHALL HAVE CONTRACTION JOINTS EVERY 10'.
C. MINIMUM OF 6" OF ODOT 304 SHALL BE PLACED UNDER CURBING.
D. CURBING SHALL BE BACKFILLED IMMEDIATELY AFTER FORMS ARE REMOVED OR AS SOON AS PRACTICAL WHEN SLIP FORMING PRIOR TO OTHER CONSTRUCTION OPERATIONS.
E. PROVIDE BROOM FINISH AND EDGING TO ALL EXPOSED SURFACES.
F. APPLY CLEAR CURING COMPOUND ON ALL SURFACES INCLUDING BACK IMMEDIATELY AFTER FINISHING SURFACES. ANY OTHER METHOD OR TYPE OF CURING COMPOUND MUST BE PREAPPROVED.
G. CONCRETE SHALL BE ODOT CLASS QC–1P WITH FIBERMESH (4000 PSI, 600 LB/CY CEMENT). PROPORTIONING OPTIONS 1 AND 2 NOT ALLOWED
H. CONCRETE SHALL CONTAIN 6% ± 1% OF TOTAL AIR.

CONCRETE FIBERS

ALL DRIVEWAYS, WALKS, AND CURB RAMPS SHALL HAVE 1.5 LBS OF 1.5" IN LENGTH PER CUBIC YARD FIBRILLATED MICROFIBERS. CONTRACTOR IS TO NOTIFY THE FIBER MANUFACTURER'S SUPPLIER REPRESENTATIVE 48 HOURS PRIOR TO THE FIRST POUR OF THE CONCRETE UTILIZING FIBER TO ENSURE FIBERS ARE MIXED CORRECTLY, PLACEMENT, AND FINISHING. FIBER REPRESENTATIVE MUST BE ON SITE FOR THE FIRST POUR.

App Architecture
creative focused design
615 Woodside Drive, Englewood, Ohio 45322
T 937.836.8898 F 937.832.3666
www.app-arch.com

STATE OF OHIO ANDREW T. SHUMAN 71386 REGISTERED PROFESSIONAL ENGINEER

MIAMI COUNTY ONE STOP CENTER
BOARD OF COMMISSIONERS FOR MIAMI COUNTY, OHIO
BARNHART ROAD, TROY, OHIO 45373

ISSUE		
NO.	DATE	DESCRIPTION
1	04/08/2022	FOR CONSTRUCTION

DATE	04/08/22
JOB NO.	3923.00
DRAWN	JAC
CHECKED	ATS

COPYRIGHT © 2022 - App Architecture, Inc.

TITLE
TYPICAL PAVEMENT SECTION

SHEET NO.
C0.9

Choice One Engineering

ONE STOP CENTER-SECTION ONE

10853	TROY	MIAMI	OHIO
INLOT	CITY	COUNTY	STATE

PLAT BOOK ____, PAGE _____
MIAMI COUNTY RECORDER'S RECORD OF PLATS

DEDICATION

WE, THE UNDERSIGNED, BEING ALL OF THE OWNERS OF THE 14.365 ACRES OF LAND HEREIN PLATTED, DO HEREBY ASSENT TO AND ADOPT THE ACCOMPANYING PLAT OF SUBDIVISION TO BE KNOWN AS THE ONE STOP SHOP–SECTION ONE AND ALL OF THE RESTRICTIVE COVENANTS AS REFERENCED, IN THE CITY OF TROY, MIAMI COUNTY, OHIO, AND DO HEREBY DEDICATE TO THE PUBLIC FOREVER, IN ACCORDANCE WITH THE LAWS IN SUCH CASES MADE AND PROVIDED, THE STREETS AND ROADWAYS AS SHOWN ON SAID PLAT, AND DECLARE THE SAME TO BE FREE AND UNENCUMBERED. THE TITLE ACQUIRED BY DEED AS RECORDED IN 20200R–18850.

EASEMENTS ON SAID PLAT, DESIGNATED AS UTILITY EASEMENTS, ARE PROVIDED FOR THE CONSTRUCTION, MAINTENANCE, AND OPERATION OF POLES, WIRES, PIPES AND CONDUITS, AND THE NECESSARY ATTACHMENTS IN CONNECTION THEREWITH, FOR THE TRANSMISSION OF ELECTRIC, TELEPHONE, CABLE TELEVISION AND OTHER PURPOSES, FOR THE CONSTRUCTION AND MAINTENANCE OF SERVICE AND UNDERGROUND STORMWATER DRAINS, PIPELINES FOR SUPPLYING GAS, WATER, SANITARY SEWER, HEAT AND OTHER PUBLIC OR QUASI–PUBLIC UTILITY FUNCTIONS TOGETHER WITH THE NECESSARY LATERAL CONNECTIONS, AND ALSO THE RIGHT TO INGRESS TO AND EGRESS FROM SAID EASEMENTS, AND TO CUT, TRIM OR REMOVE TREES AND UNDERGROWTH OR OVERHANGING BRANCHES WITHIN SAID EASEMENT OR IMMEDIATELY ADJACENT THERETO. NO BUILDINGS OR OTHER STRUCTURES MAY BE BUILT WITHIN SAID EASEMENTS, NOR MAY THE EASEMENT AREA BE PHYSICALLY ALTERED SO AS TO

(1) REDUCE THE CLEARANCE OF EITHER OVERHEAD OR UNDERGROUND FACILITIES;
(2) IMPAIR THE LAND SUPPORT OF SAID FACILITIES;
(3) IMPAIR THE ABILITY TO MAINTAIN THE FACILITY; OR
(4) CREATE A HAZARD.

THE ABOVE EASEMENTS ARE ALSO PROVIDED FOR OTHER PUBLIC USES AS DESIGNATED AND SHALL BE USED FOR THE CONSTRUCTION OF STORMWATER DRAINS, OPEN CHANNELS, PUBLIC AND PRIVATE SEWERS, PIPELINES FOR THE SUPPLYING OF WATER, CABLE TELEVISION AND FOR ANY PUBLIC OR QUASI–PUBLIC UTILITY OR FUNCTION, CONDUCTED, MAINTAINED OR PERFORMED BY ORDINARY METHODS BENEATH OR ABOVE THE SURFACE OF THE GROUND, TOGETHER WITH THE RIGHT OF INGRESS AND EGRESS OVER AND ACROSS LOTS TO AND FROM SAID EASEMENTS.

OWNER:
BOARD OF MIAMI COUNTY COMMISSIONERS

_____,
TED S. MERCER, PRESIDENT

_____,
WADE H. WESTFALL, VICE PRESIDENT

_____,
GREGORY A. SIMMONS, MEMBER

STATE OF OHIO,
COUNTY OF MIAMI, S.S.

BE IT REMEMBERED THAT ON THIS ____ DAY OF _____, 20__, BEFORE ME, THE UNDERSIGNED, A NOTARY PUBLIC IN AND FOR SAID COUNTY AND STATE, PERSONALLY CAME THE BOARD OF MIAMI COUNTY COMMISSIONERS, TED S. MERCER, WADE H. WESTFALL, AND GREGORY A. SIMMONS, TO ME KNOWN AND ACKNOWLEDGED THE SIGNING AND EXECUTION OF THE WITHIN PLAT TO BE THEIR FREE AND VOLUNTARY ACT AND DEED.

IN TESTIMONY WHEREOF, I HAVE HEREUNTO SET MY HAND AND OFFICIAL SEAL ON THE DAY AND DATE ABOVE WRITTEN.

_____,
NOTARY PUBLIC IN AND FOR STATE OF OHIO

COVENANTS AND RESTRICTIONS

PROTECTIVE COVENANTS AND RESTRICTIONS FOR THIS PLAT ARE RECORDED IN 20__OR–_____, OF THE MIAMI COUNTY RECORDER'S RECORDS.

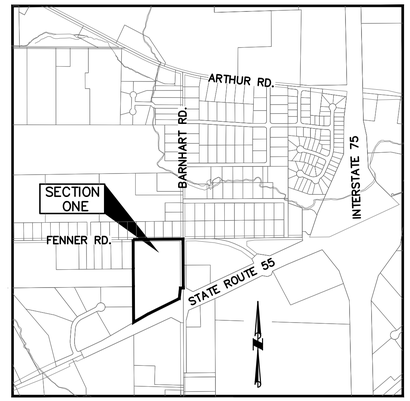

VICINITY MAP

N.T.S.

CITY OF TROY PLANNING COMMISSION

AT A MEETING OF THE PLANNING COMMISSION OF THE CITY OF TROY, OHIO, HELD THIS _____ DAY OF _____, 20__, THIS PLAT WAS APPROVED.

_____, CHAIRMAN _____, SECRETARY

CITY OF TROY COUNCIL

WE, THE CITY COUNCIL FOR THE CITY OF TROY, MIAMI COUNTY, OHIO DO HEREBY APPROVE AND ACCEPT THE DEDICATION OF LAND FOR THE STREETS AS SHOWN ON THIS PLAT OF THE ONE STOP SHOP–SECTION ONE.

SECTION ___ , BOOK _____ , THIS _____ DAY OF _____, 20___.

THIS PLAT WAS APPROVED BY ORDINANCE NO. 0–_____–20__, EFFECTIVE _____, 20___.

MAYOR PRESIDENT OF COUNCIL CLERK OF COUNCIL

DESCRIPTION

BEING A COMMERCIAL SUBDIVISION CONTAINING 14.365 ACRES OUT OF PART OF INLOT NUMBER 10853, AND OWNED BY THE BOARD OF MIAMI COUNTY COMMISSIONERS AS RECORDED IN 20200R–18850.

FEE $ _____

_____
JESSICA A. LOPEZ, MIAMI COUNTY RECORDER

_____
DEPUTY

TRANSFERRED THIS ____ DAY OF _____, 20__

_____
MATTHEW W. GEARHARDT
MIAMI COUNTY AUDITOR

_____
BY: DEPUTY AUDITOR

DRAINAGE

THE CITY OF TROY DOES NOT ACCEPT ANY PRIVATE DRAINAGE EASEMENTS SHOWN ON THIS PLAT. THE CITY OF TROY IS NOT OBLIGATED TO MAINTAIN OR REPAIR ANY CHANNELS OR INSTALLATIONS IN SAID EASEMENTS. THE OWNER OF THE LOT SHALL MAINTAIN THE EASEMENT AREA OF EACH LOT AND ALL IMPROVEMENTS IN IT CONTINUOUSLY. MAINTENANCE OF ALL IMPROVEMENTS WITHIN THE PRIVATE DRAINAGE EASEMENTS SHALL BE THE RESPONSIBILITY OF THE OWNER OF THE LOT AS PROVIDED FOR IN THE DECLARATION AND IN ACCORDANCE WITH THE STANDARDS AND SPECIFICATIONS OF THE CITY OF TROY ON FILE WITH THE CITY ENGINEER. WITHIN THE EASEMENT AREA, NO STRUCTURE, PLANTING OR OTHER MATERIAL SHALL BE PLACED OR PERMITTED TO REMAIN WHICH MAY OBSTRUCT, RETARD, OR CHANGE THE DIRECTION OF THE WATER FLOW.

THE CITY OF TROY SHALL HAVE THE PERMANENT AND IRREVOCABLE RIGHT AND AUTHORITY TO INSPECT SUCH INTERIOR STREETS, ACCESS EASEMENTS, WATERWAYS, COMMON SPACES AND IMPROVEMENTS THEREON AS ARE DEVELOPED IN THIS SUBDIVISION.

THE CITY OF TROY SHALL HAVE THE RIGHT, BUT NOT THE RESPONSIBILITY, TO ENTER UPON ANY LOT IN THE SUBDIVISION TO INSPECT AND MONITOR ANY STORM WATER DETENTION BASIN AREA OR DRAINAGE FACILITIES CONSTRUCTED IN THE SUBDIVISION. IN THE EVENT THAT THE FACILITIES ARE NOT PROPERLY CONSTRUCTED OR MAINTAINED, UPON THE FAILURE OF THE DEVELOPER, LOT OWNER, OR THE ASSOCIATION TO TAKE CORRECTIVE ACTION AFTER BEING DULY NOTIFIED IN WRITING BY THE CITY, THE CITY SHALL HAVE THE RIGHT, BUT NOT THE OBLIGATION TO TAKE WHATEVER ACTION IS NECESSARY TO CORRECT ANY IMPROPER CONSTRUCTION OR TO MAINTAIN STORM WATER DETENTION BASINS AREAS AND DRAINAGE FACILITIES; PROVIDED, HOWEVER, THAT THE DEVELOPER, LOT OWNER, AND/OR ASSOCIATION SHALL FIRST HAVE A REASONABLE PERIOD OF TIME, TAKING INTO ACCOUNT THE URGENCY OF THE MATTER, TO TAKE CORRECTIVE ACTION. ANY COST INCURRED BY THE CITY OF TROY FOR SUCH MAINTENANCE MAY BE ASSESSED TO THE ASSOCIATION OR, IF THERE IS NO ASSOCIATION, OR THE ASSOCIATION HAS CEASED TO EXIST, AGAINST INDIVIDUAL LOT OWNER. THESE RESTRICTIONS SHALL RUN WITH THE LAND, AND SHALL BIND THE OWNERS, SUCCESSORS, AND ASSIGNS UNLESS AND UNTIL A MODIFICATION IS AGREED TO AND APPROVED BY THE COUNCIL OF THE CITY OF TROY.

AREA SUMMARY

2 BUILDING LOTS	12.580	ACRES
EXISTING STREET R/W	0.764	ACRES
DEDICATED NEW STREET R/W	1.021	ACRES
TOTAL	14.365	ACRES

STATE OF OHIO WESLEY D. GOUBEAUX 8254 REGISTERED PROFESSIONAL SURVEYOR

SUBMITTED FOR REVIEW

I HEREBY CERTIFY THAT THIS IS A TRUE REPRESENTATION OF THE SUBDIVISION HEREON PLATTED BASED ON AN ACTUAL SURVEY PERFORMED UNDER MY DIRECTION. 5/8"X 30" IRON PINS WITH CAPS WILL BE SET AT ALL LOT CORNERS AFTER CONSTRUCTION OF STREETS AND UTILITIES.

WESLEY D. GOUBEAUX, P.S. #8254 DATE

Choice One Engineering
SIDNEY, OHIO 937.497.0200
LOVELAND, OHIO 513.239.8554
www.CHOICEONEENGINEERING.com

DATE: 02–03–2022
DRAWN BY: MPL
JOB NUMBER: MIATRO2106
SHEET NUMBER 1 OF 2

Choice One Engineering

App Architecture
creative focused design
615 Woodside Drive, Englewood, Ohio 45322
T 937.836.8898 F 937.832.3696
www.app-arch.com

STATE OF OHIO ANDREW T. SHUMAN 71386 REGISTERED PROFESSIONAL ENGINEER

MIAMI COUNTY ONE STOP CENTER
BOARD OF COMMISSIONERS FOR MIAMI COUNTY, OHIO
BARNHART ROAD, TROY, OHIO 45373

ISSUE

NO.	DATE	DESCRIPTION
1	04/08/2022	FOR CONSTRUCTION

DATE	04/08/22
JOB NO.	3923.00
DRAWN	JAC
CHECKED	ATS

COPYRIGHT © 2022 - App Architecture, Inc.

TITLE
FINAL PLAT

SHEET NO.
C0.10

PLAT BOOK ____, PAGE _____–A
MIAMI COUNTY RECORDER'S RECORD
OF PLATS

ONE STOP CENTER-SECTION ONE

10853	TROY	MIAMI	OHIO
INLOT	CITY	COUNTY	STATE

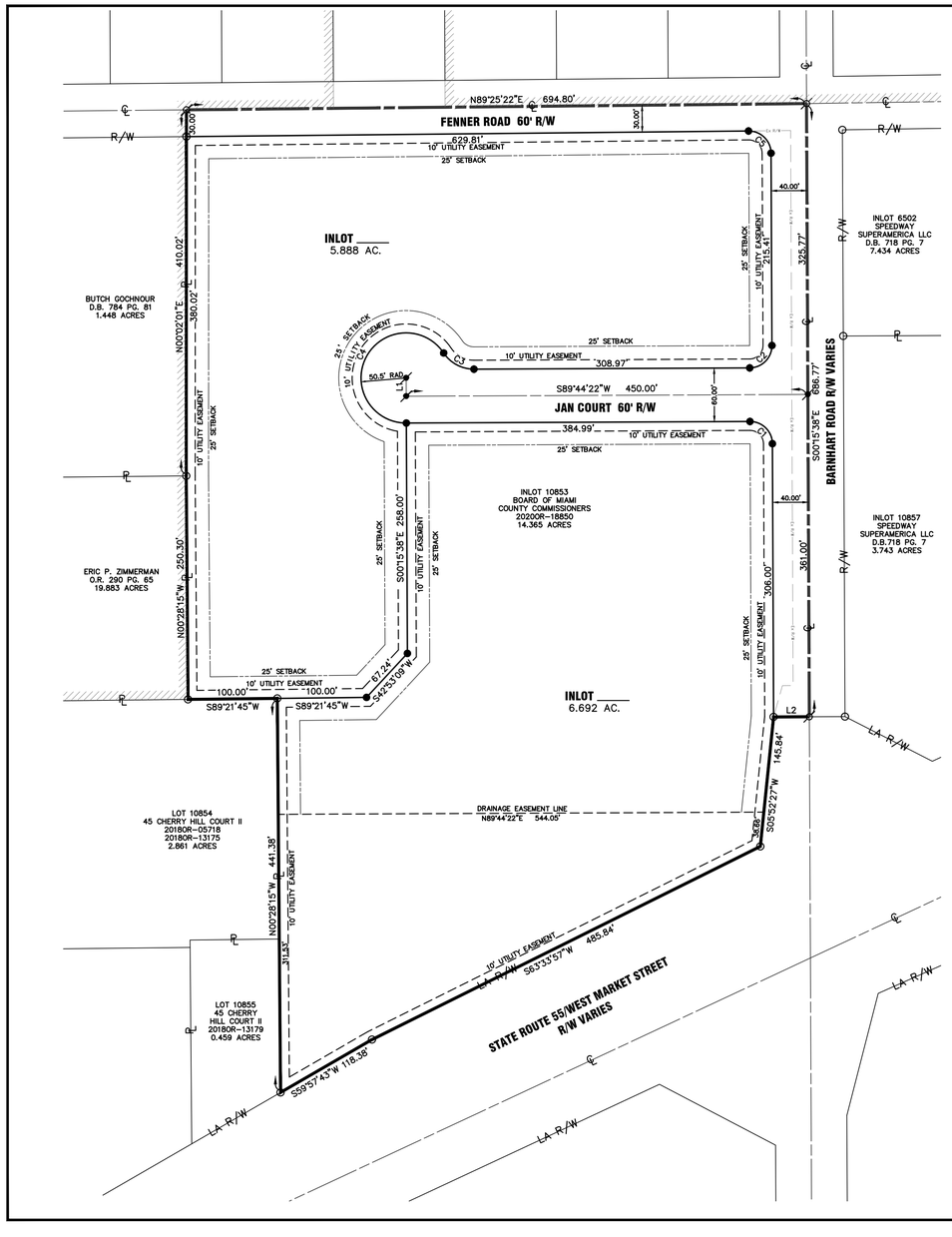

DEED REFERENCE

INLOT 10853
BOARD OF MIAMI COUNTY
COMMISSIONERS
20200R–18850
14.365 ACRES

SURVEY REFERENCE

LAND SURVEY 8, PG. 34
LAND SURVEY 21, PG. 63
LAND SURVEY 22, PG. 7
REC. P.B. 22, PG. 52
REC. P.B. 27, PG. 30
REC. P.B. 27, PG. 49

NOTES

1.) ALL FRONT LOT LINES ARE SUBJECT TO A 10' UTILITY EASEMENT UNLESS OTHERWISE NOTED. THERE SHALL BE A 10' UTILITY EASEMENT ALONG EACH SIDE OF THE INTERIOR LOT LINES UNLESS OTHERWISE NOTED.

2.) NO WELLS SHALL BE DRILLED IN THIS SUBDIVISION.

3.) ALL DRIVEWAYS SHALL BE INSTALLED OFF OF JAN COURT.

4.) STREET IMPROVEMENTS SHALL BE DONE UPON DEVELOPMENT.

CURVE TABLE

CURVE	RADIUS	LENGTH	DELTA	CH DIST	CH BEARING
C1	25.00'	39.27'	90°00'00"	35.36'	N45°15'38"W
C2	25.00'	39.27'	90°00'00"	35.36'	S44°44'22"W
C3	40.50'	40.06'	56°40'14"	38.45'	N61°55'31"W
C4	50.50'	208.61'	236°41'00"	88.89'	S28°04'07"W
C5	25.00'	39.41'	90°19'00"	35.45'	S45°25'08"E

LINE TABLE

LINE	LENGTH	BEARING
L1	20.50'	N00°16'23"W
L2	40.00'	S89°44'22"W

LEGEND

- 5/8" X 30" REBAR W/CAP TO BE SET
- IRON PIN FOUND
- MAG NAIL SET
- MAG NAIL FOUND
- UTILITY EASEMENT LINE (SEE NOTE 1)
- BUILDING SETBACK LINE FRONT=25' REAR=25' SIDE=10' AS SHOWN ON THIS PLAT
- EXISTING CORPORATION LINE

THE BEARINGS SHOWN HEREON ARE BASED ON NAD 83, GEOID 2003 OHIO SOUTH ZONE, ODOT VRS CORS NETWORK

SCALE 1" = 80'

0 40 80 160

STATE OF KENTUCKY
NICK GOUBEAUX
REGISTERED PROFESSIONAL SURVEYOR

SUBMITTED FOR REVIEW

ChoiceOne Engineering
SIDNEY, OHIO 937.497.0200
LOVELAND, OHIO 513.239.8554
www.CHOICEONEENGINEERING.com

DATE: 02–03–2022
DRAWN BY: MPL
JOB NUMBER: MIATRO2106
SHEET NUMBER 2 OF 2

ChoiceOne Engineering

App Architecture
creative focused design
615 Woodside Drive, Englewood, Ohio 45322
T 937.836.8898 F 937.832.3666
www.app-arch.com

STATE OF OHIO
ANDREW T. SHUMAN
71386
REGISTERED
PROFESSIONAL ENGINEER

MIAMI COUNTY ONE STOP CENTER
BOARD OF COMMISSIONERS FOR MIAMI COUNTY, OHIO
BARNHART ROAD, TROY, OHIO 45373

ISSUE

NO.	DATE	DESCRIPTION
1	04/08/2022	FOR CONSTRUCTION

DATE	04/08/22
JOB NO.	3923.00
DRAWN	JAC
CHECKED	ATS

COPYRIGHT © 2022 - App Architecture, Inc.

TITLE
FINAL PLAT

SHEET NO.
C0.11

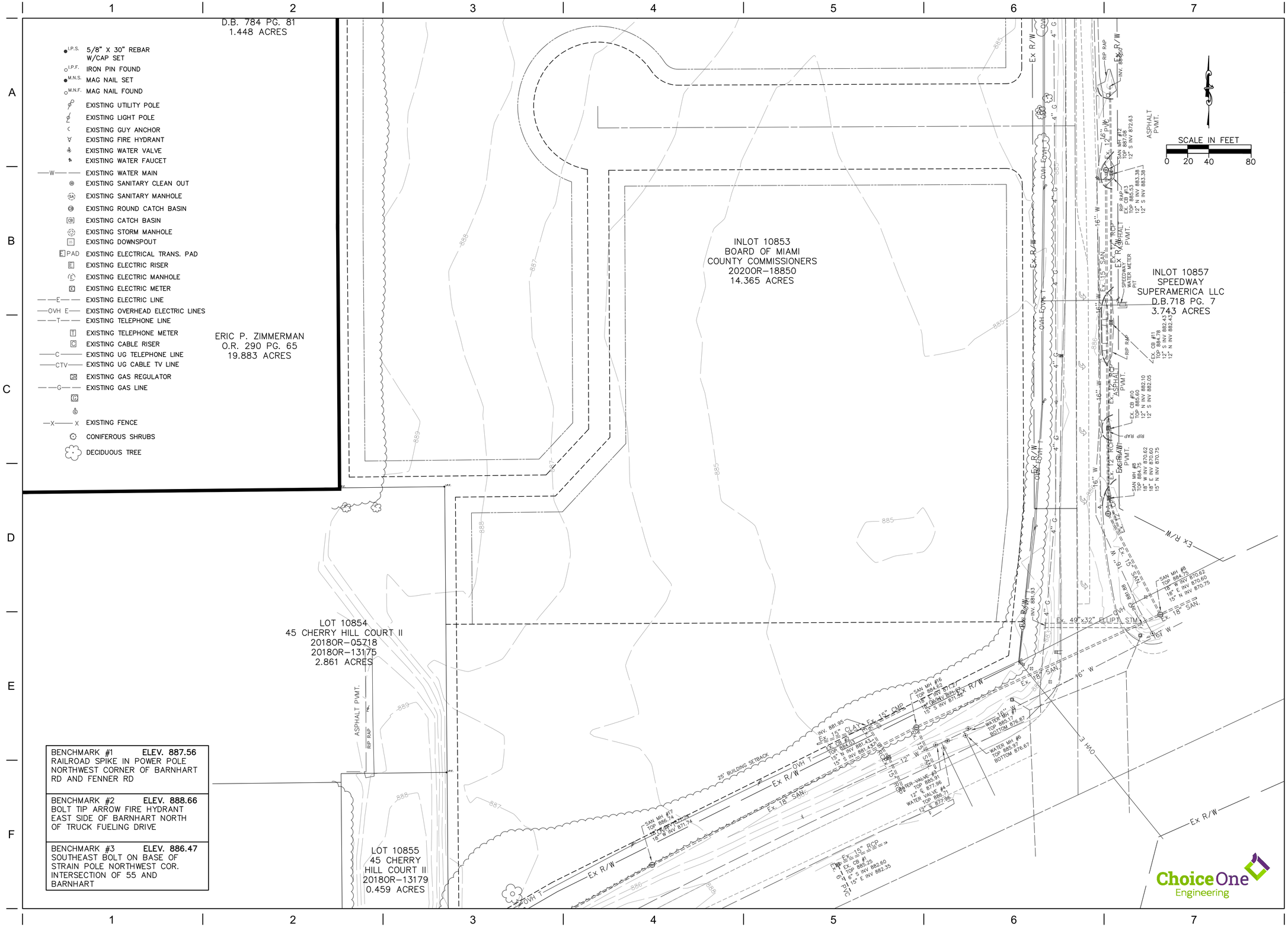

BENCHMARK #1	ELEV. 887.56
RAILROAD SPIKE IN POWER POLE NORTHWEST CORNER OF BARNHART RD AND FENNER RD	
BENCHMARK #2	ELEV. 888.66
BOLT TIP ARROW FIRE HYDRANT EAST SIDE OF BARNHART NORTH OF TRUCK FUELING DRIVE	
BENCHMARK #3	ELEV. 886.47
SOUTHEAST BOLT ON BASE OF STRAIN POLE NORTHWEST COR. INTERSECTION OF 55 AND BARNHART	

App Architecture
creative focused design
615 Woodside Drive, Englewood, Ohio 45322
T 937.836.8898 F 937.832.3666
www.app-arch.com

OHIO ANDREW T. SHUMAN 71386 REGISTERED PROFESSIONAL ENGINEER

MIAMI COUNTY ONE STOP CENTER
BOARD OF COMMISSIONERS FOR MIAMI COUNTY, OHIO
BARNHART ROAD, TROY, OHIO 45373

ISSUE

NO.	DATE	DESCRIPTION
1	04/08/2022	FOR CONSTRUCTION

DATE	04/08/22
JOB NO.	3923.00
DRAWN	JAC
CHECKED	ATS

COPYRIGHT © 2022 - App Architecture, Inc.

TITLE
EXISTING TOPO PLAN

SHEET NO.
C1.1

HEAVY DUTY CONCRETE PAVEMENT
ITEM 452 – 8" NON–REINFORCED CONCRETE PAVEMENT (ODOT QC–1P) WITH 3 LBS/CY OF EITHER EUCLID CHEMICAL TUFSTRAND SF, FORTA FERRO FIBRILLATED MACROFIBERS OR APPROVED EQUIVALENT MEETING ASTM C 1116 TYPE 3, MINIMUM 2" LENGTH, ASPECT RATIO 50 TO 90. CONTRACTOR SHALL CONTACT THE FIBER MANUFACTURER'S SUPPLIER 48 HOURS PRIOR TO ORDERING THE FIRST BATCH OF CONCRETE FOR APPROPRIATE MIXING AND FINISHING PROCEDURES ON
ITEM 304 – 6" AGGREGATE BASE ON
ITEM 204 – SUBGRADE COMPACTION

HEAVY DUTY ASPHALT PAVEMENT
ITEM 441 – 1 1/4" ASPHALT CONCRETE, SURFACE COURSE, TYPE 1, (448) PG 64–22 ON
ITEM 407 – NON–TRACKING TACK COAT (APPLIED AT A RATE OF 0.06 GALLONS PER SQUARE YARD) ON
ITEM 441 – 1 3/4" ASPHALT CONCRETE, INTERMEDIATE COURSE, TYPE 2, (448) ON
ITEM 407 – NON–TRACKING TACK COAT (APPLIED AT A RATE OF 0.06 GALLONS PER SQUARE YARD) ON
ITEM 301 – 3" ASPHALT CONCRETE BASE ON
ITEM 304 – 8" AGGREGATE BASE (2 EQUAL LIFTS) ON
ITEM 204 – SUBGRADE COMPACTION

REGULAR DUTY ASPHALT PAVEMENT
ITEM 441 – 1 1/2" ASPHALT CONCRETE, SURFACE COURSE, TYPE 1, (448) PG 64–22 ON
ITEM 407 – NON–TRACKING TACK COAT (APPLIED AT A RATE OF 0.06 GALLONS PER SQUARE YARD) ON
ITEM 441 – 2 1/2" ASPHALT CONCRETE, INTERMEDIATE COURSE, TYPE 2, (448) ON
ITEM 304 – 6" AGGREGATE BASE (2 EQUAL LIFTS) ON
ITEM 204 – SUBGRADE COMPACTION

REMOVE AND REPLACE EXISTING PAVEMENT IN-KIND
CONTRACTOR TO COORDINATE THE REMOVAL AND REPLACEMENT OF IN–KIND PAVEMENT WITH THE OWNER TO MAINTAIN ACCESS TO THE EXISTING AREAS AS NEEDED AND TO MINIMIZE AND PROPERLY SCHEDULE ANY DOWNTIME THAT MAY BE REQUIRED TO PERFORM THIS WORK. ACTUAL AREAS OF IN–KIND PAVEMENT REPLACEMENT TO BE AS NEEDED TO PERFORM REQUIRED WORK

CONCRETE SIDEWALK
ITEM 608 – 4" CONCRETE SIDEWALK (ODOT QC–1P) ON
ITEM 411 – 4" STABILIZED AGGREGATE BASE

PROPOSED BUILDING

SITE DATA:
BUILDING HEIGHT: 20'–6"
PROPOSED PARKING SPACES: 186

Choice One Engineering

PAVEMENT STRIPING NOTES:
ANY PROPOSED PAVEMENT MARKING SHALL BE STRIPED AS PART OF THIS WORK.

ALL PAVEMENT MARKING LINES SHALL BE WHITE OR YELLOW (DO NOT REQUIRE REFLECTOR BEADS) AND SHALL CONSIST OF 4" WIDE LINES.

ALL PAVEMENT MARKINGS SHALL BE PER ODOT ITEM 640 AND 642. ALL PAVEMENT MARKINGS TO BE TYPE 1, UNLESS APPLICATION IS REQUIRED WHEN AIR AND PAVEMENT TEMPERATURES ARE BETWEEN 35 °F AND 50 °F, THEN OBTAIN APPROVAL FROM THE OWNER AND APPLY ONLY PRE–QUALIFIED TYPE 1A COLD WEATHER TRAFFIC PAINT MATERIALS PER ITEM 642 AND 740.

ALL MARKING LAYOUT AND COLOR SHALL BE APPROVED BY THE OWNER'S REPRESENTATIVE PRIOR TO INSTALLATION.

NOTES:
1) ALL DIMENSIONS INVOLVING CURBING ARE TO THE FACE OF CURB, UNLESS OTHERWISE NOTED.

2) INSTALL DRIVEWAY PER CITY OF TROY STANDARDS.

3) CONTRACTOR TO VERIFY EXACT LOCATION, DEPTH AND SIZE OF UTILITIES PRIOR TO CONSTRUCTION. CONTRACTOR SHALL NOTIFY OWNER OF ANY CONFLICTS PRIOR TO THE INSTALLATION OF UTILITIES.

4) CONTRACTOR TO FOLLOW ALL PERMIT REQUIREMENTS AND SPECIFICATIONS TO INSTALL THE PROPOSED DEVELOPMENT INCLUDING COORDINATING THE INSTALLATION WITH LOCAL OFFICIALS AS NEEDED AND/OR REQUIRED.

5) CONTRACTOR TO COORDINATE ALL WORK WITH THE OWNER AS NEEDED/REQUIRED.

6) CONTRACTOR TO COORDINATE THE LOWERING OF UTILITIES IN BARNHART ROAD WITH THE ASSOCIATED COMPANIES. SEE PLAN VIEW FOR LOWERING LIMITS.

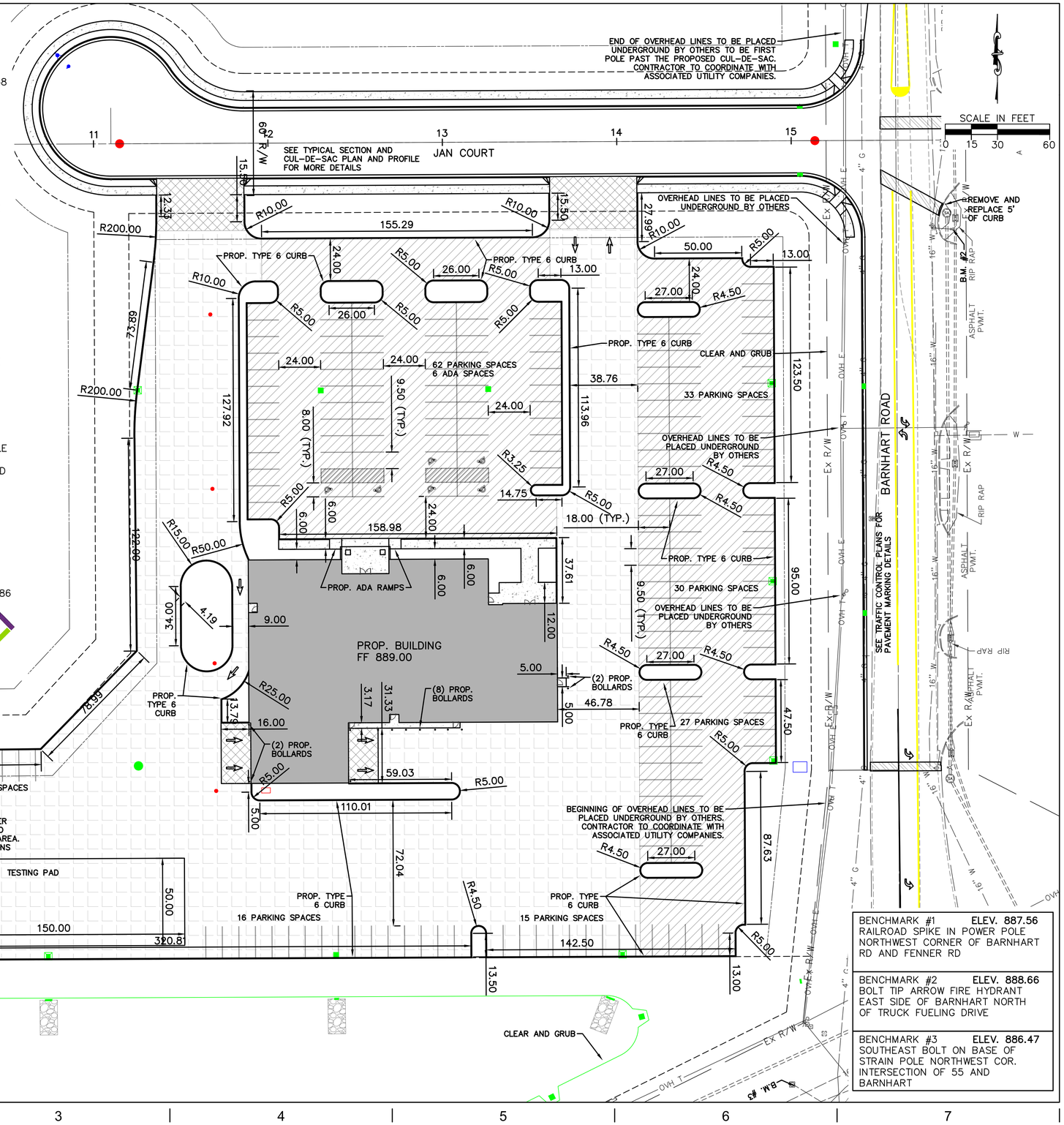

BENCHMARK #1	ELEV. 887.56
RAILROAD SPIKE IN POWER POLE NORTHWEST CORNER OF BARNHART RD AND FENNER RD	
BENCHMARK #2	ELEV. 888.66
BOLT TIP ARROW FIRE HYDRANT EAST SIDE OF BARNHART NORTH OF TRUCK FUELING DRIVE	
BENCHMARK #3	ELEV. 886.47
SOUTHEAST BOLT ON BASE OF STRAIN POLE NORTHWEST COR. INTERSECTION OF 55 AND BARNHART	

App Architecture
creative focused design
615 Woodside Drive, Englewood, Ohio 45322
T 937.836.8898 F 937.832.3666
www.app-arch.com

OHIO ANDREW T. SHUMAN 71386 REGISTERED PROFESSIONAL ENGINEER

MIAMI COUNTY ONE STOP CENTER
BOARD OF COMMISSIONERS FOR MIAMI COUNTY, OHIO
BARNHART ROAD, TROY, OHIO 45373

ISSUE

NO.	DATE	DESCRIPTION
1	04/08/2022	FOR CONSTRUCTION

DATE	04/08/22
JOB NO.	3923.00
DRAWN	JAC
CHECKED	ATS

COPYRIGHT © 2022 - App Architecture, Inc.

TITLE
DIMENSIONING AND PAVEMENT PLAN

SHEET NO.
C1.2

NOTES:
CONTRACTOR TO VERIFY EXACT LOCATION, DEPTH AND SIZE OF UTILITIES PRIOR TO CONSTRUCTION. CONTRACTOR SHALL NOTIFY OWNER OF ANY CONFLICTS PRIOR TO THE INSTALLATION OF UTILITIES.

ALL UTILITIES TO BE INSTALLED PER CITY OF TROY STANDARDS.

CONTRACTOR TO VERIFY AND LOCATE WHERE STORM, SANITARY, AND WATER LATERALS AND ALL OTHER PROPOSED UTILITY SERVICES TIE INTO THE PROPOSED BUILDING PER BUILDING PLANS. CONTRACTOR SHALL ALSO VERIFY THE SIZES AND TYPES OF ALL LATERALS AND HOW THEY MAY TIE INTO THE PROPOSED BUILDINGS.

CONTRACTOR TO FOLLOW ALL PERMIT REQUIREMENTS AND SPECIFICATIONS TO INSTALL THE PROPOSED UTILITIES INCLUDING COORDINATING THE INSTALLATION WITH LOCAL OFFICIALS AS NEEDED AND/OR REQUIRED.

CONTRACTOR TO COORDINATE ALL WORK WITH THE OWNER AS NEEDED/REQUIRED.

DOWNSPOUT PIPING NOTE:
THE CONTRACTOR SHALL CONNECT ANY DOWNSPOUTS AS SHOWN ON THE SITE PLAN OR TO THE CLOSEST STORM PIPING OR CATCH BASINS USING CPSLP OR PVC SDR-35 SEWER OR APPROVED EQUAL.

EXISTING UTILITY NOTES:
CONTRACTOR SHALL DETERMINE THE TYPE OF SERVICE FOR ALL EXISTING UNDERGROUND LINES THAT ARE ENCOUNTERED DURING CONSTRUCTION AND SHALL ENSURE THE FOLLOWING:

1. THAT ALL EXISTING STORM LINES OR ANY OTHER EXISTING CLEAN WATER DRAINAGE LINES THAT ARE DISCOVERED AND/OR ENCOUNTERED DURING CONSTRUCTION AND ARE OR NEED TO REMAIN IN SERVICE ARE ROUTED AS NEEDED TO ENSURE THAT THEY ARE CONNECTED INTO THE PROPOSED OR EXISTING STORM SEWER.

2. THAT ALL EXISTING SANITARY LINES THAT ARE DISCOVERED AND/OR ENCOUNTERED DURING CONSTRUCTION AND ARE TO REMAIN IN SERVICE ARE ROUTED AS NEEDED TO ENSURE THAT THEY ARE CONNECTED INTO ACTIVE EXISTING SANITARY SEWER LINES/STRUCTURES OR INTO PROPOSED SANITARY SEWER LINES/STRUCTURES.

3. THAT ALL EXISTING WATER LINES THAT ARE DISCOVERED AND/OR ENCOUNTERED DURING CONSTRUCTION AND ARE TO REMAIN IN SERVICE ARE ROUTED AS NEEDED TO ENSURE THAT THEY ARE CONNECTED INTO ACTIVE EXISTING WATER LINES OR INTO PROPOSED WATER LINES.

ALL WORK TO BE PER AND AS DIRECTED BY THE OWNER'S REPRESENTATIVE AND TO BE WITNESSED BY THE OWNER'S REP. COST OF THIS ITEM SHALL BE INCLUDED IN THE COST OF THE CONTRACTOR'S OVERALL LUMP SUM BID FOR THE PROJECT.

LOCATE EXISTING UTILITIES NOTE:
THIS ITEM OF WORK MAY BE PERFORMED ON AS NEEDED BASIS AND SHALL CONSIST OF THE CONTRACTOR FIELD LOCATING THE VARIOUS EXISTING UTILITY LINES LOCATION, SIZE, AND DEPTH PRIOR TO PERFORMING ANY PROPOSED WORK OR ONCE WORK HAS BEGUN. THIS WORK MAY ALSO REQUIRE THE CONTRACTOR TO INSPECT THE LINES BY OTHER METHODS SUCH AS DYE TESTING OR CAMERA/VIDEO TO FIND THE ORIGIN AND LOCATION OF THE LINE. THE CONTRACTOR SHALL COOPERATE AND COORDINATE WITH THE OWNER AS NEEDED TO ENSURE EXISTING FACILITY OPERATIONS ARE MAINTAINED.

ALL WORK TO BE PER AND AS DIRECTED BY THE OWNER'S REPRESENTATIVE AND TO BE WITNESSED BY THE OWNER'S REPRESENTATIVE. COST OF THIS ITEM SHALL BE INCLUDED IN THE COST OF THE CONTRACTOR'S OVERALL LUMP SUM BID FOR THE PROJECT.

UNKNOWN EXISTING UNDERGROUND UTILITIES:
CONTRACTOR TO BE AWARE THERE MAY BE OTHER UNKNOWN SERVICES OR UNKNOWN UNDERGROUND UTILITIES OR ITEMS WHICH MAY BE LOCATED WITHIN THE SITE AND MAY REQUIRE REMOVAL OR REROUTING IN ORDER TO PERFORM THE PROPOSED PROJECT. CONTRACTOR SHALL NOTIFY OWNER IMMEDIATELY OF ANY UNKNOWN UNDERGROUND UTILITIES OR OTHER ITEMS WHICH ARE ENCOUNTERED AND WORK WITH THE OWNER TO DECIDE HOW THESE ITEMS SHOULD BE HANDLED.

GAS, ELECTRIC, COMMUNICATION CONFLICT NOTE:
CONTRACTOR TO LOWER/DIP THESE UTILITIES AS NEEDED TO AVOID CONFLICTS WITH ANY PROPOSED OR EXISTING SANITARY OR STORM OR WATER LINES THEY MAY CONFLICT WITH. IF THESE UTILITY LINES CONFLICT WITH ANY PROPOSED OR EXISTING WATERLINES THEN CONTRACTOR TO DETERMINE WHETHER TO LOWER/DIP THE WATERLINE OR LOWER/DIP THE GAS/ELECTRIC/COMMUNICATION LINE(S). CONTRACTOR MAY NEED TO CONSULT WITH AND OBTAIN OWNER'S APPROVAL AS TO WHICH UTILITY WILL BE LOWERED PRIOR TO PERFORMING THIS WORK. COST OF THIS ITEM SHALL BE INCLUDED IN THE COST OF THE CONTRACTOR'S OVERALL LUMP SUM BID FOR THE PROJECT.

ELECTRICAL/MECHANICAL NOTE:
CONTRACTOR SHALL REFER TO THE ELECTRICAL/MECHANICAL DRAWINGS FOR DEMOLITION AND/OR INSTALLATION INFO. OF ALL EXISTING AND PROPOSED ELECTRICAL/MECHANICAL ITEMS FOR THE SITE AND/OR HOW THESE ITEMS ARE TO BE HANDLED AND ADDRESSED.

WATER MAIN CROSSING SEPARATION NOTE:
WHENEVER A SANITARY OR STORM SEWER AND WATER LINE MUST CROSS, THE SEWER AND WATER SHALL BE LAID AT SUCH AN ELEVATION THAT THERE IS AT LEAST 18" OF SEPARATION BETWEEN THE OUTSIDE WALLS OF THE TWO PIPES. IF REQUIRED, CONTRACTOR SHALL LOWER/DIP THE WATER MAIN AS NEEDED TO OBTAIN THE 18" MINIMUM SEPARATION DISTANCE. IF IT IS ABSOLUTELY IMPOSSIBLE TO MAINTAIN THE 18" VERTICAL SEPARATION, THE SANITARY SEWER SHALL BE CONSTRUCTED OF WATER LINE TYPE MATERIALS WHICH WOULD BE ABLE TO WITHSTAND A 100 PSI PRESSURE TEST (NOTE: DO NOT PRESSURE TEST SANITARY SEWER TO 100 PSI). THESE REQUIREMENTS WILL EXTEND FOR THE DISTANCE OF THE ENTIRE SPAN. NO CHANGE OF MATERIALS ARE ALLOWED MID-SPAN.

AT CROSSINGS, THE WATER MAIN SHALL HAVE A MINIMUM VERTICAL DISTANCE OF 18" FROM STORM AND SANITARY SEWERS. ALSO ONE FULL LENGTH OF WATER MAIN SHALL BE LOCATED SO THE JOINTS ARE AS FAR FROM THE STORM AND SANITARY SEWERS AS POSSIBLE.

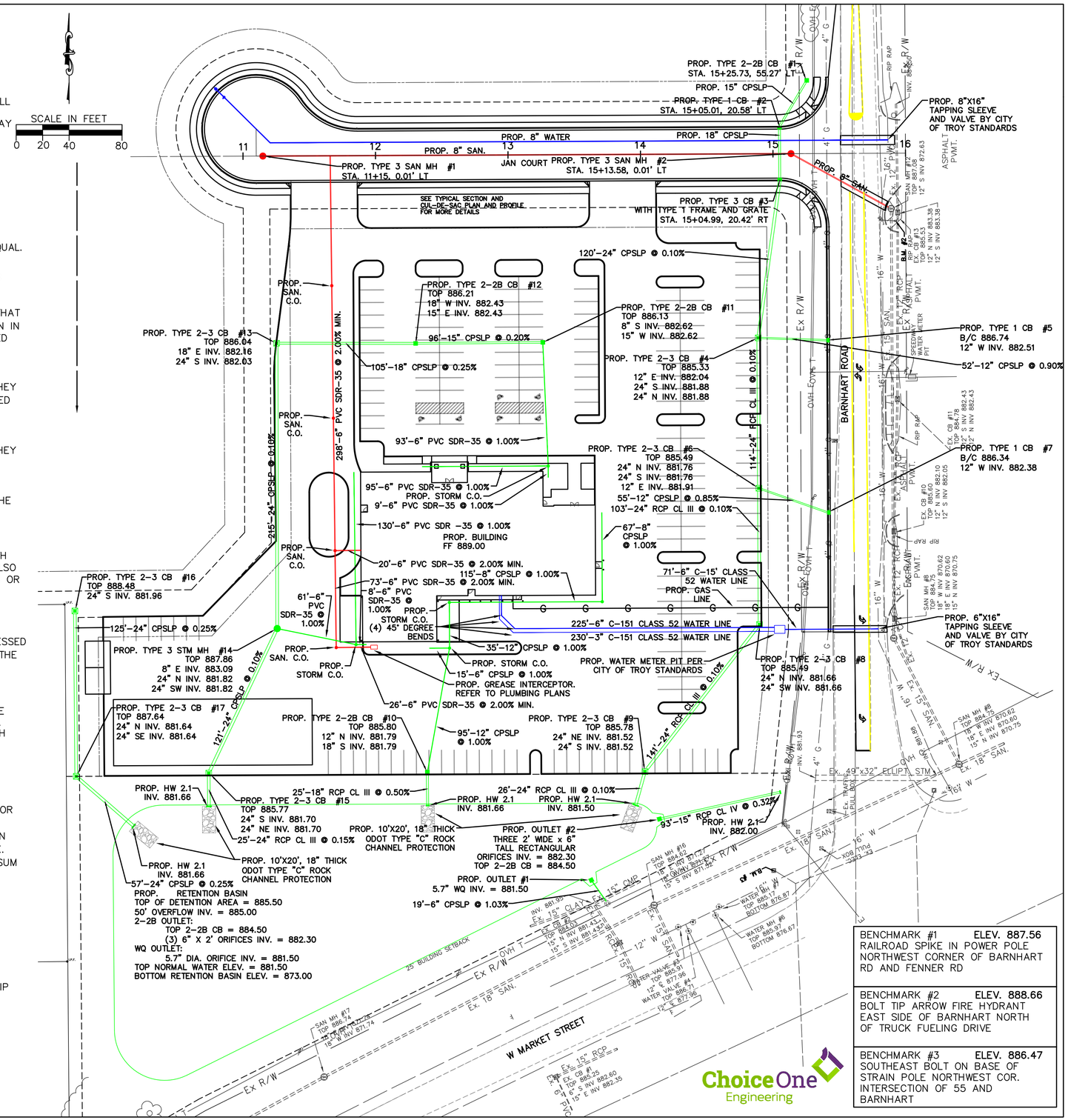

BENCHMARK #1	ELEV. 887.56
RAILROAD SPIKE IN POWER POLE NORTHWEST CORNER OF BARNHART RD AND FENNER RD	
BENCHMARK #2	ELEV. 888.66
BOLT TIP ARROW FIRE HYDRANT EAST SIDE OF BARNHART NORTH OF TRUCK FUELING DRIVE	
BENCHMARK #3	ELEV. 886.47
SOUTHEAST BOLT ON BASE OF STRAIN POLE NORTHWEST COR. INTERSECTION OF 55 AND BARNHART	

ChoiceOne Engineering

App Architecture
creative focused design
615 Woodside Drive, Englewood, Ohio 45322
T 937.836.8898 F 937.832.3666
www.app-arch.com

OHIO ANDREW T. SHUMAN 71386 REGISTERED PROFESSIONAL ENGINEER

MIAMI COUNTY ONE STOP CENTER
BOARD OF COMMISSIONERS FOR MIAMI COUNTY, OHIO
BARNHART ROAD, TROY, OHIO 45373

ISSUE

NO.	DATE	DESCRIPTION
1	04/08/2022	FOR CONSTRUCTION

DATE	04/08/22
JOB NO.	3923.00
DRAWN	JAC
CHECKED	ATS

COPYRIGHT © 2022 - App Architecture, Inc.

TITLE
UTILITY PLAN

SHEET NO.
C2.1

LEGEND

- —830— EXISTING CONTOURS
- 830 PROPOSED CONTOURS
- PROPOSED STORM SEWER
- PROPOSED SANITARY SEWER
- PROPOSED EDGE PAVEMENT

PROJECT EARTH DISTURBED AREA = 8.32 ACRES

NOTES:

CONTRACTOR TO VERIFY EXACT LOCATION, DEPTH AND SIZE OF UTILITIES PRIOR TO CONSTRUCTION. CONTRACTOR SHALL NOTIFY OWNER OF ANY CONFLICTS PRIOR TO THE INSTALLATION OF UTILITIES.

CONTRACTOR TO TIE INTO EXISTING PAVEMENT ELEVATIONS AS REQUIRED WHERE EVER NEW PAVEMENT ABUTS UP TO EXISTING PAVEMENT TO ENSURE A SMOOTH TRANSITION. ALL EX. PAVEMENT ELEVATIONS GIVEN ARE APPROXIMATED AND SHALL BE FIELD VERIFIED. CONTRACTOR SHALL ALSO ENSURE THAT A SMOOTH TRANSITION IS PROVIDED WHERE EVER PROPOSED GRADES MEET EXISTING GRADES THROUGHOUT THE SITE.

ALL DISTURBED LAWN AREAS SHALL BE GRADED TO DRAIN TO THE NEAREST INLET STRUCTURE.

CONTRACTOR TO ENSURE ALL AREAS OF THE SITE HAVE POSITIVE DRAINAGE. NO PONDING OR PUDDLING OF WATER IS PERMITTED.

GRADING LIMITS NOTE:

CONTRACTOR SHALL VERIFY THE FOLLOWING WITH THE **CONSTRUCTION MANAGER AND OWNER'S REPRESENTATIVE:**

1. AREAS WHERE GRADING OPERATIONS ARE TO TAKE PLACE.
2. AREAS WHERE GRADING OPERATIONS ARE NOT TO TAKE PLACE.
3. GRADING LIMITS.
4. GRADING TIE-IN POINTS TO EXISTING GRADES.

TRANSITION DETAIL

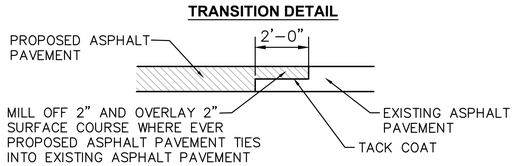

BENCHMARK #1 RAILROAD SPIKE IN POWER POLE NORTHWEST CORNER OF BARNHART RD AND FENNER RD	ELEV. 887.56
BENCHMARK #2 BOLT TIP ARROW FIRE HYDRANT EAST SIDE OF BARNHART NORTH OF TRUCK FUELING DRIVE	ELEV. 888.66
BENCHMARK #3 SOUTHEAST BOLT ON BASE OF STRAIN POLE NORTHWEST COR. INTERSECTION OF 55 AND BARNHART	ELEV. 886.47

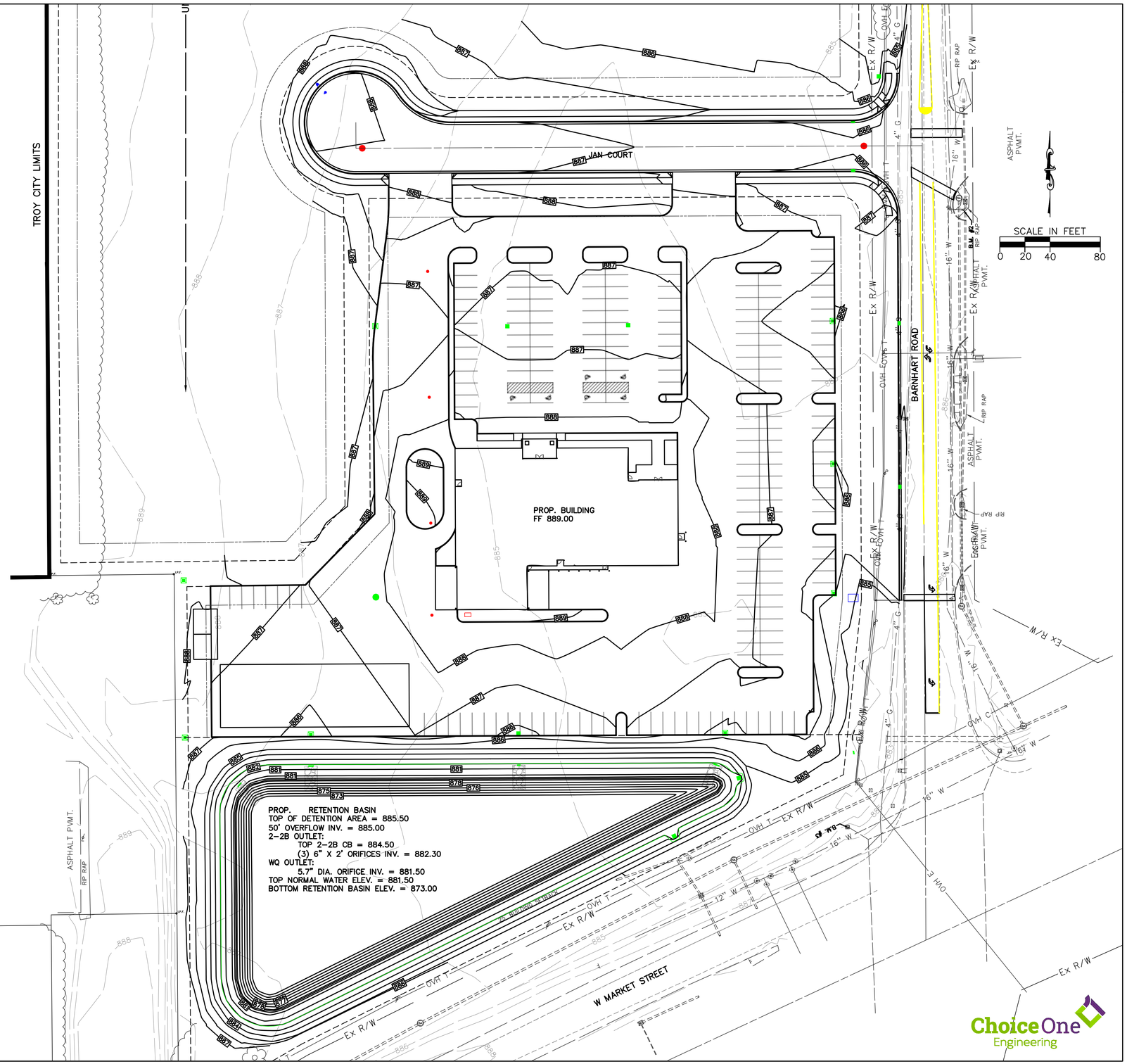

App Architecture
creative focused design
615 Woodside Drive, Englewood, Ohio 45322
T 937.836.8898 F 937.832.3666
www.app-arch.com

OHIO ANDREW T. SHUMAN 71386 REGISTERED PROFESSIONAL ENGINEER

MIAMI COUNTY ONE STOP CENTER
BOARD OF COMMISSIONERS FOR MIAMI COUNTY, OHIO
BARNHART ROAD, TROY, OHIO 45373

ISSUE

NO.	DATE	DESCRIPTION
1	04/08/2022	FOR CONSTRUCTION

DATE	04/08/22
JOB NO.	3923.00
DRAWN	JAC
CHECKED	ATS

COPYRIGHT © 2022 - App Architecture, Inc.

TITLE
GRADING PLAN

SHEET NO.
C3.1

SCALE IN FEET

0 15 30 60

LEGEND

EP = EXISTING PAVEMENT ELEVATION
P = PROPOSED PAVEMENT ELEVATION
B = PROPOSED TOP OF CURB ELEVATION
W = PROPOSED SIDEWALK ELEVATION
G = PROPOSED GROUND ELEVATION
TOP = PROPOSED TOP OF GRATE ELEVATION

NOTE THAT IN ORDER TO FACILITATE PROPER ADA ACCESS THERE MAY BE AREAS WHERE IT IS INTENDED FOR THERE TO BE NO CURB EXPOSURE (PAVEMENT AND TOP OF CURB TO BE FLUSH).

ADA RAMPS NOTE:
CONTRACTOR TO SEE **DIMENSION SHEET** FOR ADA RAMP LOCATIONS AND DETAILS. CONTRACTOR SHALL INSTALL ALL ADA RAMPS PER ALL ADA REGULATIONS. CONTRACTOR SHALL VERIFY THE FOLLOWING WITH THE **ARCHITECT AND/OR OWNER:**

1. THE EXACT LOCATION, CONFIGURATION AND TYPE OF ALL PROPOSED ADA RAMPS.
2. ALL AREAS WITHIN THE PROPOSED ADA RAMPS WHERE THE CURBING IS TO BE FLUSH WITH PAVEMENT OR WALK TO PROVIDE PROPER ADA ACCESS.
3. THE AREAS WITHIN THE PROPOSED ADA CURB RAMPS WHERE FLARES AND RAMPS ARE TO BE INSTALLED WITH ADA COMPLIANT SLOPES TO PROVIDE PROPER ADA ACCESS.

NOTE:
CONTRACTOR TO TIE INTO EXISTING PAVEMENT ELEVATIONS AS REQUIRED WHERE EVER NEW PAVEMENT ABUTS UP TO EXISTING PAVEMENT TO ENSURE A SMOOTH TRANSITION. ALL EX. PAVEMENT ELEVATIONS GIVEN ARE APPROXIMATED AND SHALL BE FIELD VERIFIED. CONTRACTOR SHALL ALSO ENSURE THAT A SMOOTH TRANSITION IS PROVIDED WHERE EVER PROPOSED GRADES MEET EXISTING GRADES THROUGHOUT THE SITE.

BENCHMARK #1 RAILROAD SPIKE IN POWER POLE NORTHWEST CORNER OF BARNHART RD AND FENNER RD	**ELEV. 887.56**
BENCHMARK #2 BOLT TIP ARROW FIRE HYDRANT EAST SIDE OF BARNHART NORTH OF TRUCK FUELING DRIVE	**ELEV. 888.66**
BENCHMARK #3 SOUTHEAST BOLT ON BASE OF STRAIN POLE NORTHWEST COR. INTERSECTION OF 55 AND BARNHART	**ELEV. 886.47**

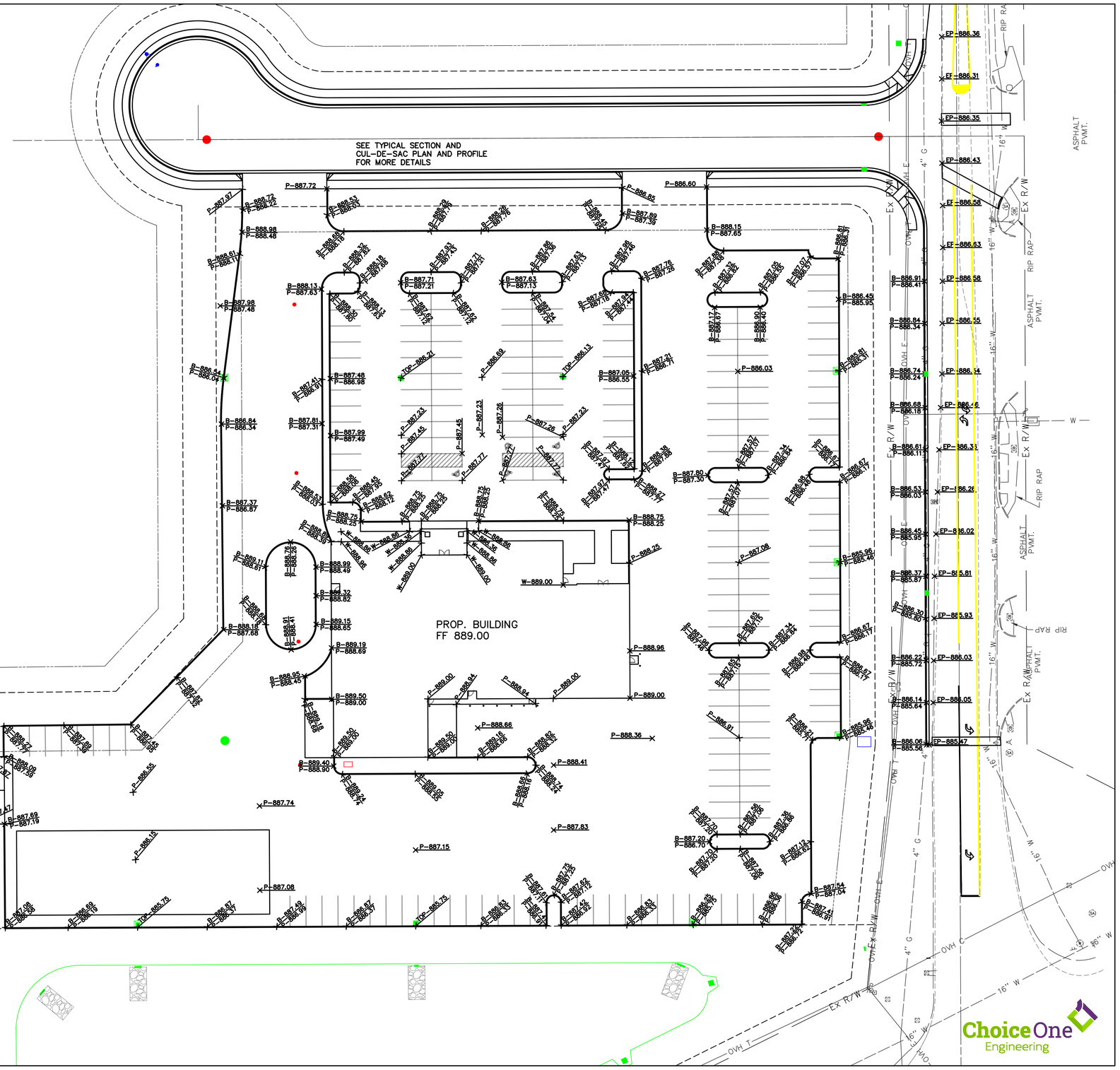

App Architecture
creative focused design
615 Woodside Drive, Englewood, Ohio 45322
T 937.836.8898 F 937.832.3666
www.app-arch.com

OHIO ANDREW T. SHUMAN 71386 REGISTERED PROFESSIONAL ENGINEER

MIAMI COUNTY ONE STOP CENTER
BOARD OF COMMISSIONERS FOR MIAMI COUNTY, OHIO
BARNHART ROAD, TROY, OHIO 45373

ISSUE

NO.	DATE	DESCRIPTION
1	04/08/2022	FOR CONSTRUCTION

DATE	04/08/22
JOB NO.	3923.00
DRAWN	JAC
CHECKED	ATS

COPYRIGHT © 2022 - App Architecture, Inc.

TITLE
PAVEMENT ELEVATIONS PLAN

SHEET NO.
C3.2

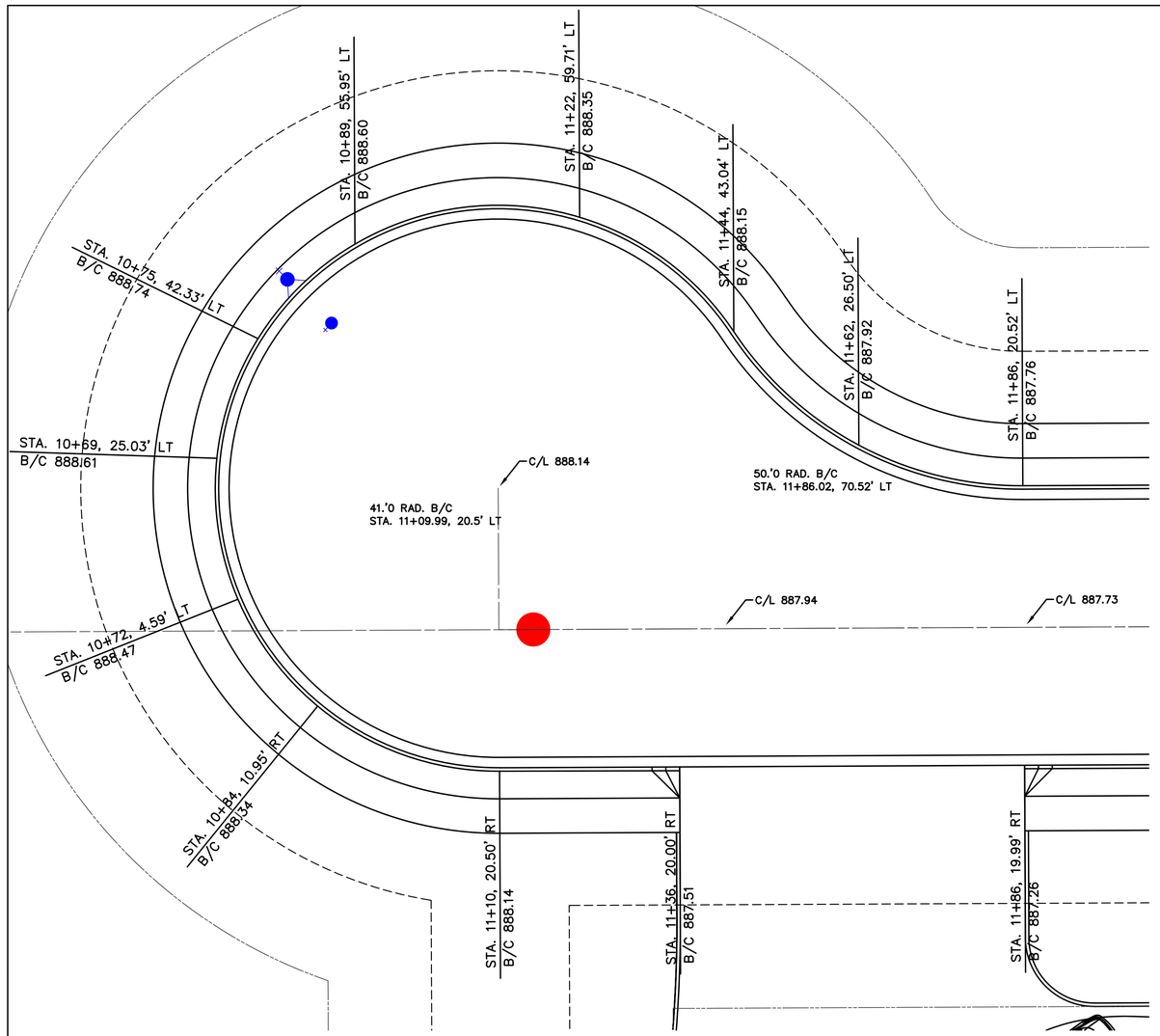

JAN COURT

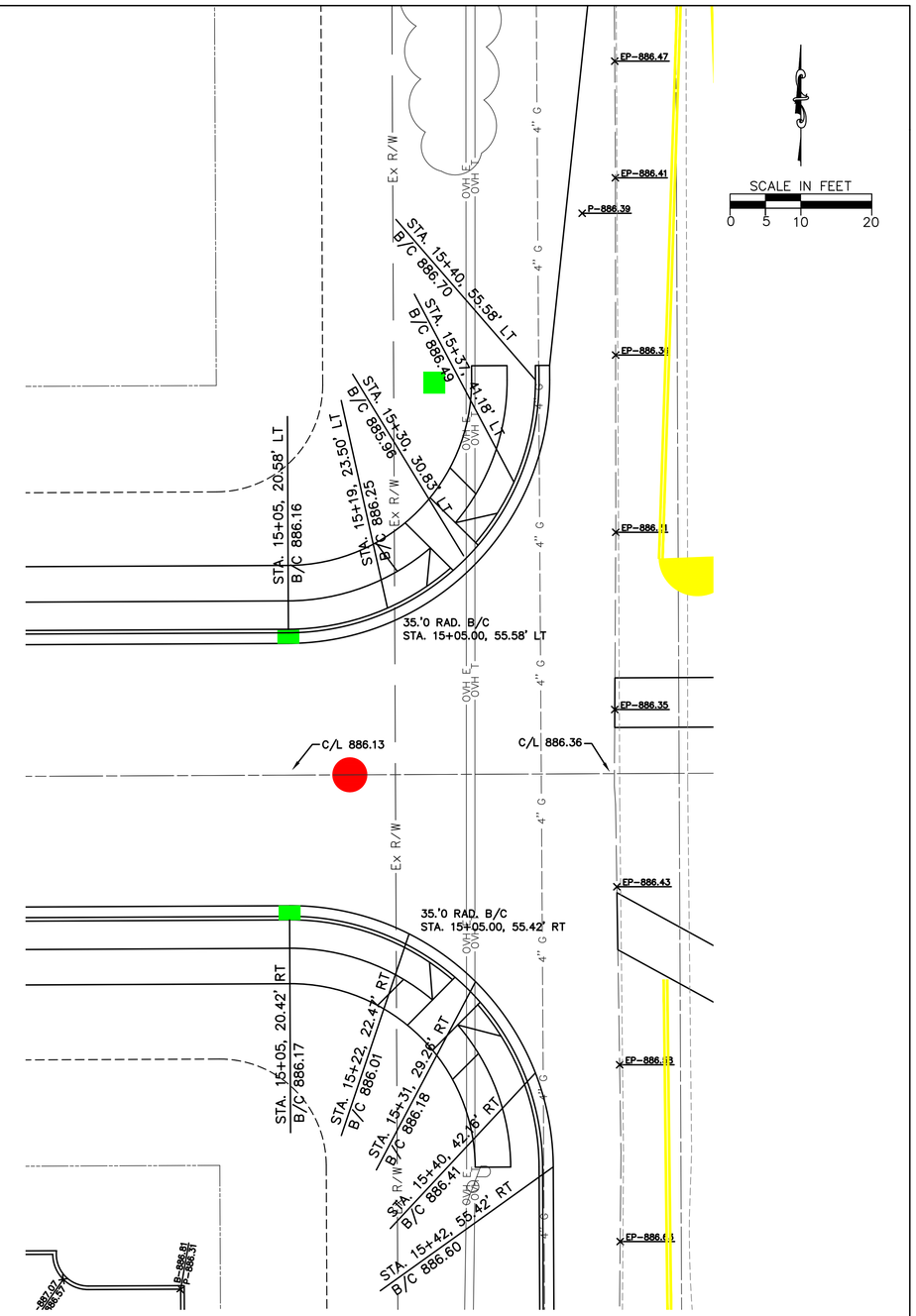

JAN COURT AND BARNHART ROAD INTERSECTION

ChoiceOne Engineering

App Architecture
creative focused design
625 Woodside Drive, Englewood, Ohio 45322
T 937.836.8898 F 937.832.3666
www.app-arch.com

STATE OF OHIO
ANDREW T. SHUMAN
71386
REGISTERED
PROFESSIONAL ENGINEER

MIAMI COUNTY ONE STOP CENTER
BOARD OF COMMISSIONERS FOR MIAMI COUNTY, OHIO
BARNHART ROAD, TROY, OHIO 45373

ISSUE

NO.	DATE	DESCRIPTION
1	04/08/2022	FOR CONSTRUCTION

DATE	04/08/22
JOB NO.	3923.00
DRAWN	JAC
CHECKED	ATS

COPYRIGHT © 2022 - App Architecture, Inc.

TITLE
INTERSECTIONS ELEVATIONS PLAN

SHEET NO.
C3.3

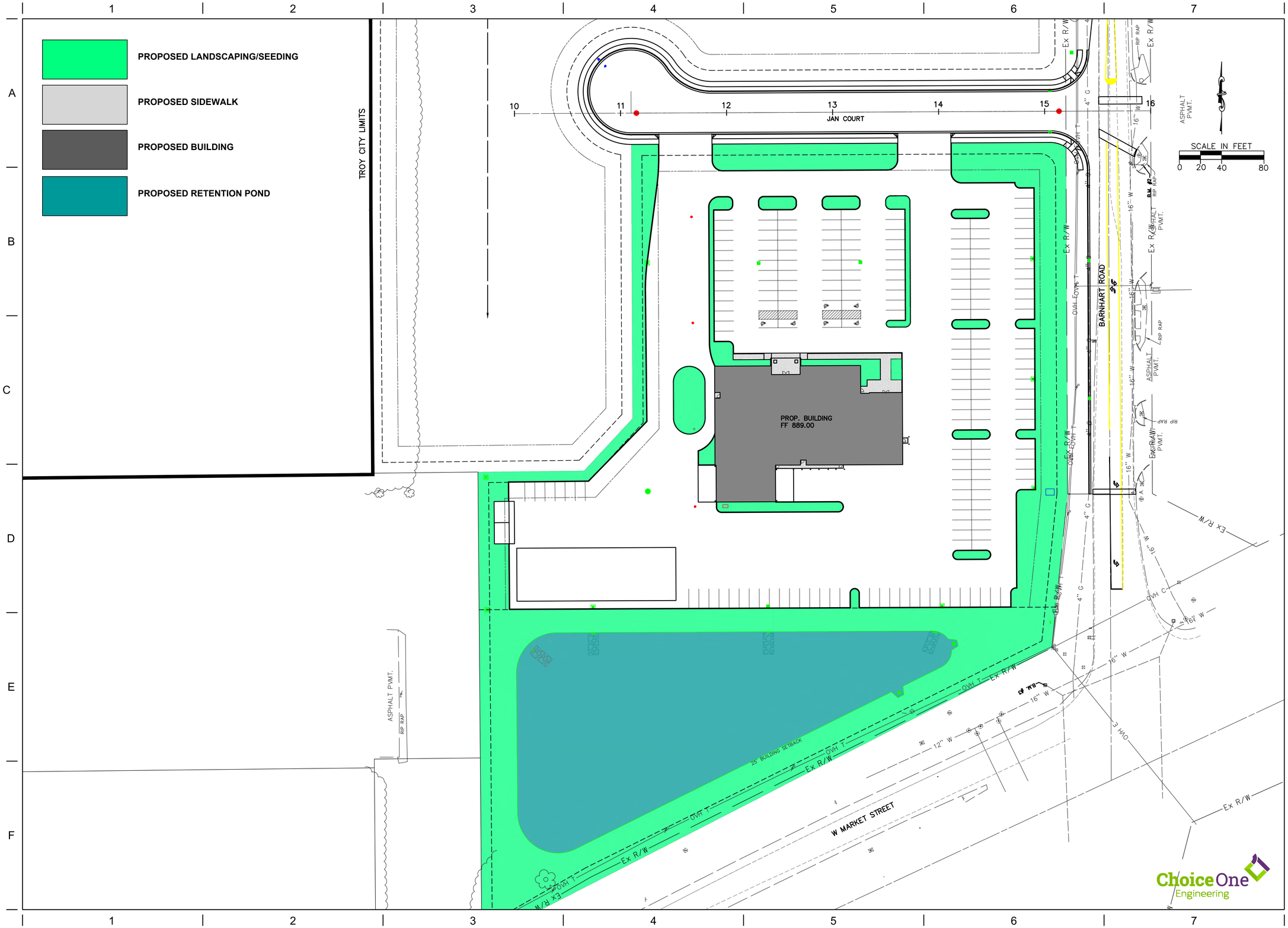

App Architecture
creative focused design
625 Woodside Drive, Englewood, Ohio 45322
T 937.836.8898 F 937.832.3666
www.app-arch.com

STATE OF OHIO
ANDREW T. SHUMAN
71386
REGISTERED
PROFESSIONAL ENGINEER

MIAMI COUNTY ONE STOP CENTER
BOARD OF COMMISSIONERS FOR MIAMI COUNTY, OHIO
BARNHART ROAD, TROY, OHIO 45373

ISSUE

NO.	DATE	DESCRIPTION
1	04/08/2022	FOR CONSTRUCTION

DATE	04/08/22
JOB NO.	3923.00
DRAWN	JAC
CHECKED	ATS

COPYRIGHT © 2022 - App Architecture, Inc.

TITLE
LANDSCAPE PLAN

SHEET NO.
C4.1

Choice One Engineering

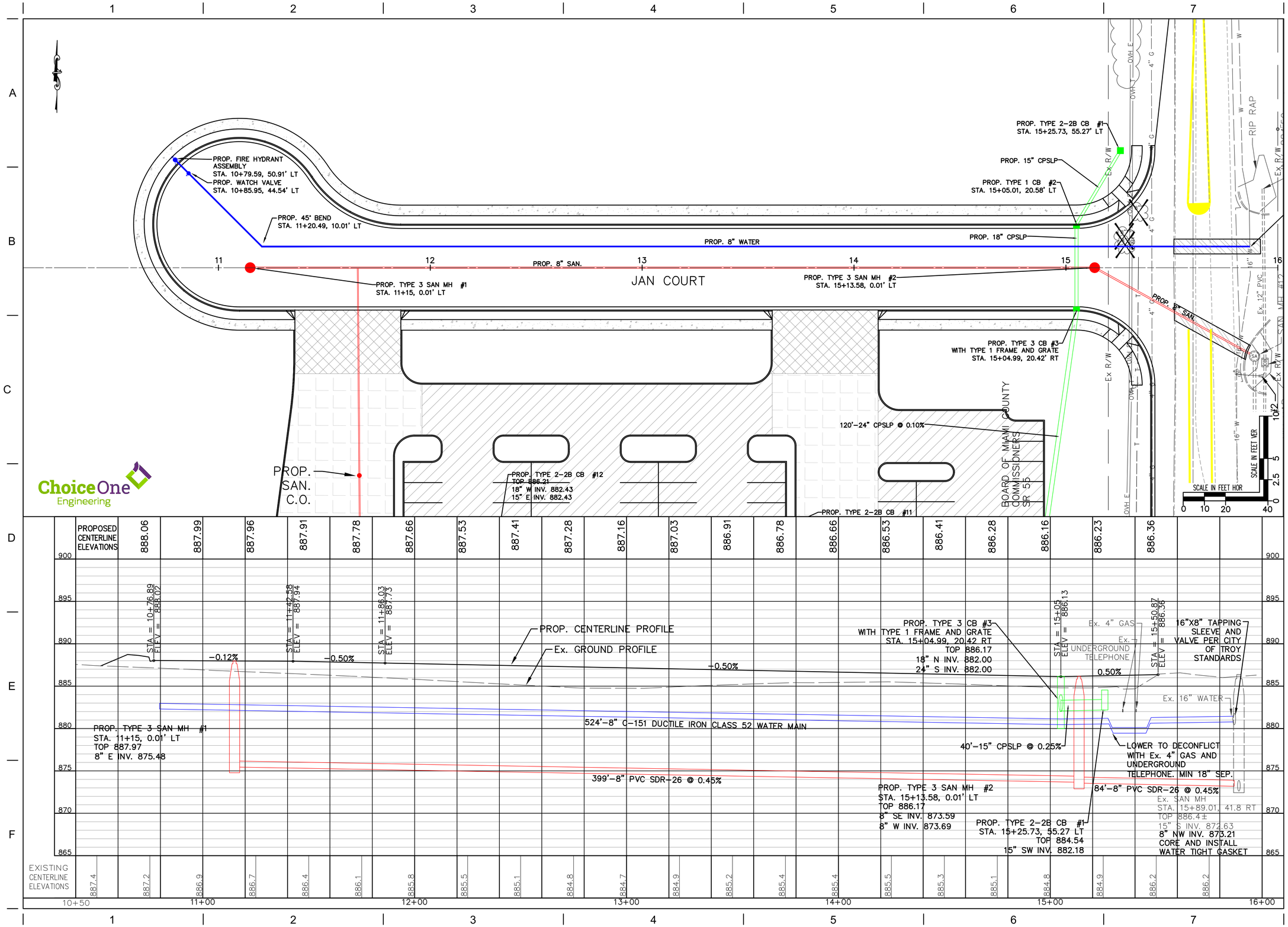

Choice One Engineering

App Architecture
creative focused design
615 Woodside Drive, Englewood, Ohio 45322
T 937.836.8898 F 937.832.3696
www.app-arch.com

OHIO ANDREW T. SHUMAN 71386 REGISTERED PROFESSIONAL ENGINEER

MIAMI COUNTY ONE STOP CENTER
BOARD OF COMMISSIONERS FOR MIAMI COUNTY, OHIO
BARNHART ROAD, TROY, OHIO 45373

ISSUE

NO.	DATE	DESCRIPTION
1	04/08/2022	FOR CONSTRUCTION

DATE	04/08/22
JOB NO.	3923.00
DRAWN	JAC
CHECKED	ATS

COPYRIGHT © 2022 - App Architecture, Inc.

TITLE
JAN COURT P-P
STA. 10+00 TO
STA. 16+00

SHEET NO.
C5.1

LEGEND

- (CLX) ITEM 643 – CENTER LINE (DOUBLE YELLOW)
- (CHX) ITEM 643 – CHANNELIZING LINE, 8" (WHITE)
- (LAX) ITEM 643 – LANE ARROW (WHITE)
- (SLX) ITEM 643 – STOP LINE, 24" (WHITE)
- XXX PAVEMENT MARKING REMOVED

SCALE IN FEET
0 10 20 40

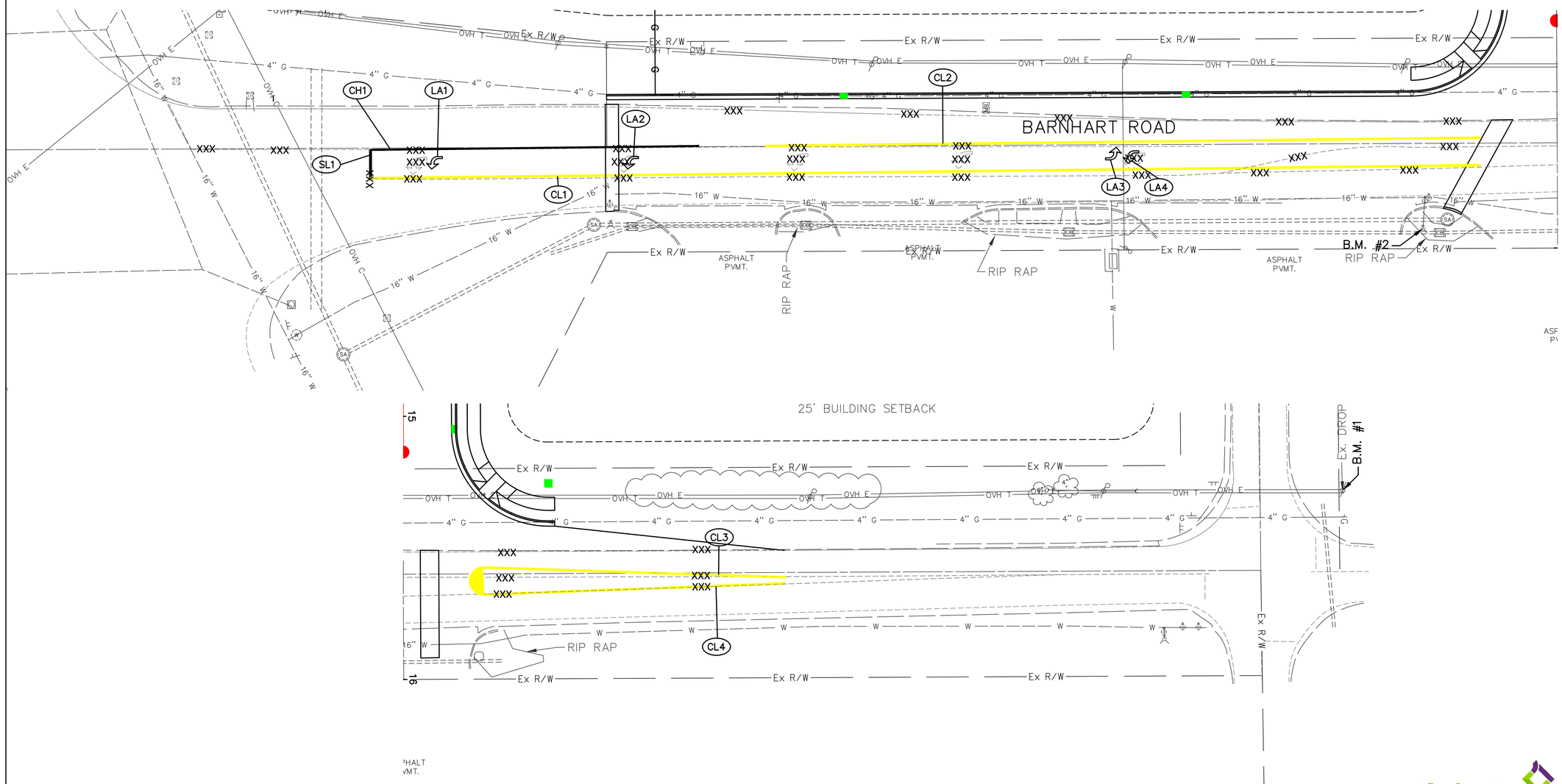

App Architecture
creative focused design
625 Woodside Drive, Englewood, Ohio 45322
T 937.836.8898 F 937.832.3666
www.app-arch.com

OHIO ANDREW T. SHUMAN 71386 REGISTERED PROFESSIONAL ENGINEER

MIAMI COUNTY ONE STOP CENTER
BOARD OF COMMISSIONERS FOR MIAMI COUNTY, OHIO
BARNHART ROAD, TROY, OHIO 45373

ISSUE

NO.	DATE	DESCRIPTION
1	04/08/2022	FOR CONSTRUCTION

DATE	04/08/22
JOB NO.	3923.00
DRAWN	JAC
CHECKED	ATS

COPYRIGHT © 2022 - App Architecture, Inc.

TITLE
TRAFFIC CONTROL PLAN

SHEET NO.
C5.2

Choice One Engineering

SCALE IN FEET

0 25 50 100

53' TRACTOR TRAILER TURN TEMPLATE

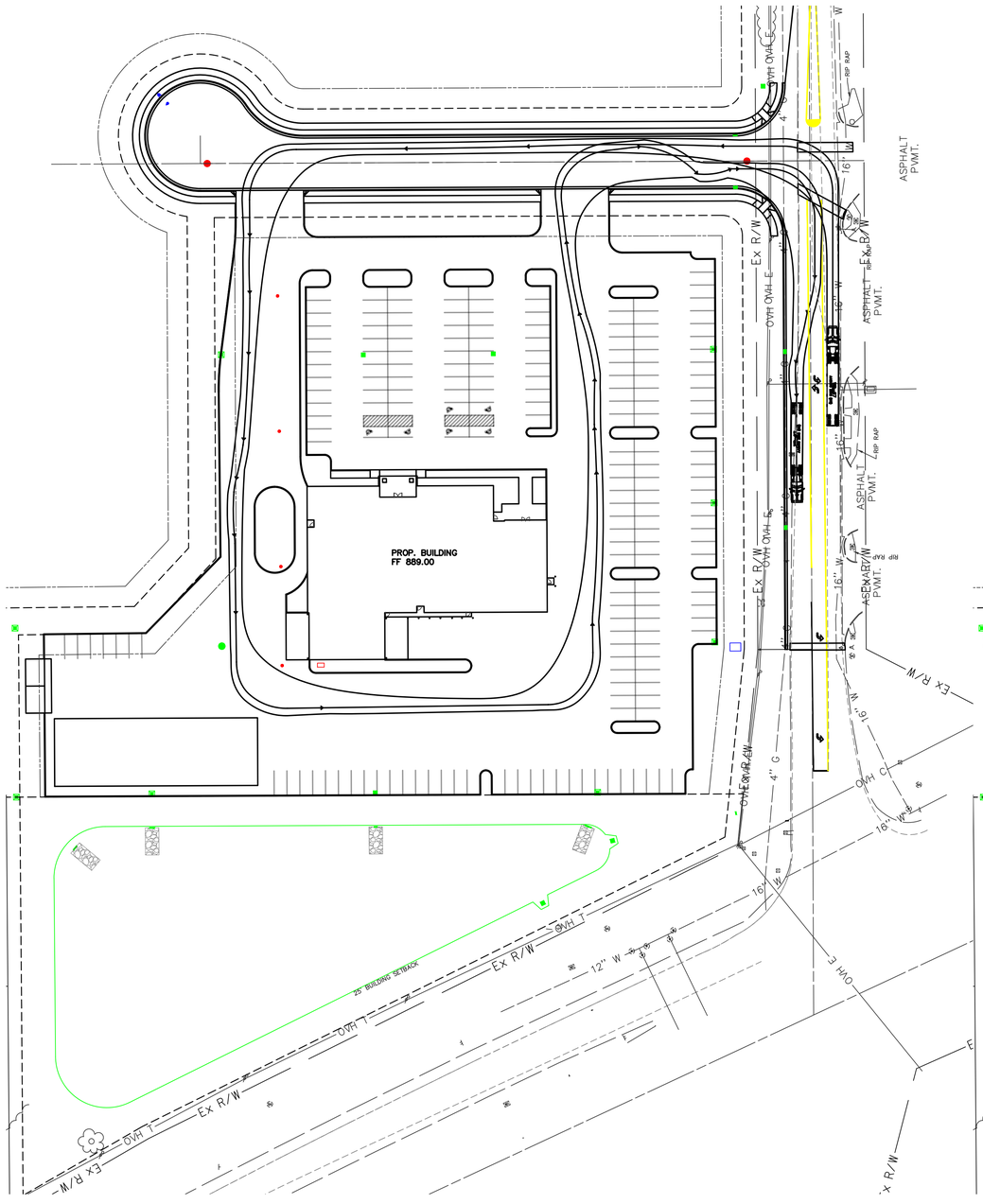

VEHICLE USING THE SERVICE BAY

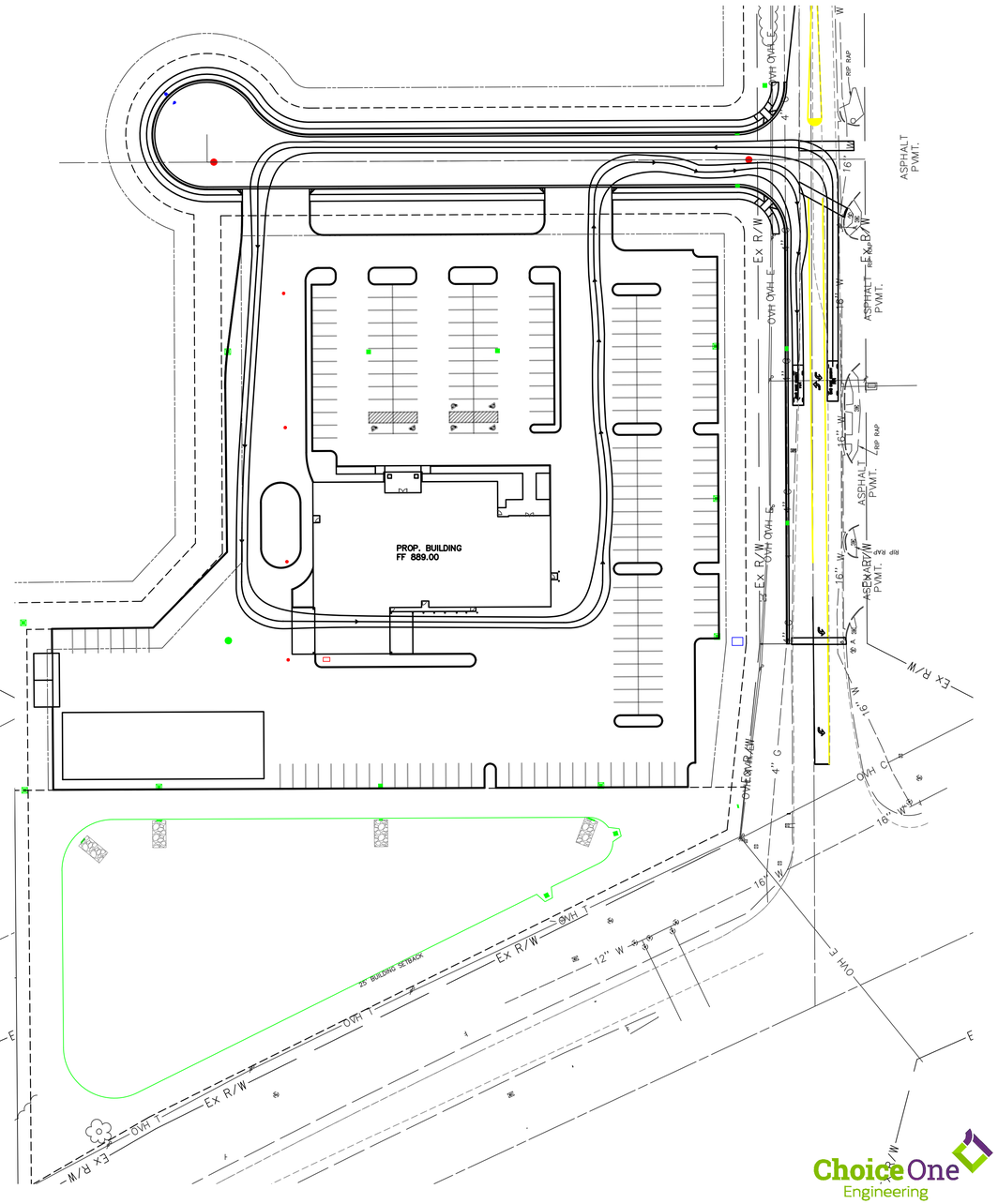

Choice One Engineering

App Architecture
creative focused design
615 Woodside Drive, Englewood, Ohio 45322
T 937.836.8898 F 937.832.3696
www.app-arch.com

STATE OF OHIO
ANDREW T. SHUMAN
71386
REGISTERED PROFESSIONAL ENGINEER

MIAMI COUNTY ONE STOP CENTER

BOARD OF COMMISSIONERS FOR MIAMI COUNTY, OHIO

BARNHART ROAD, TROY, OHIO 45373

ISSUE

NO.	DATE	DESCRIPTION
1	04/08/2022	FOR CONSTRUCTION

DATE	04/08/22
JOB NO.	3923.00
DRAWN	JAC
CHECKED	ATS

COPYRIGHT © 2022 - App Architecture, Inc.

TITLE
VEHICLE TURN TEMPLATE

SHEET NO.
C5.3

SCALE IN FEET

0 25 50 100

CARS USING THE DRIVE-THRU WINDOW

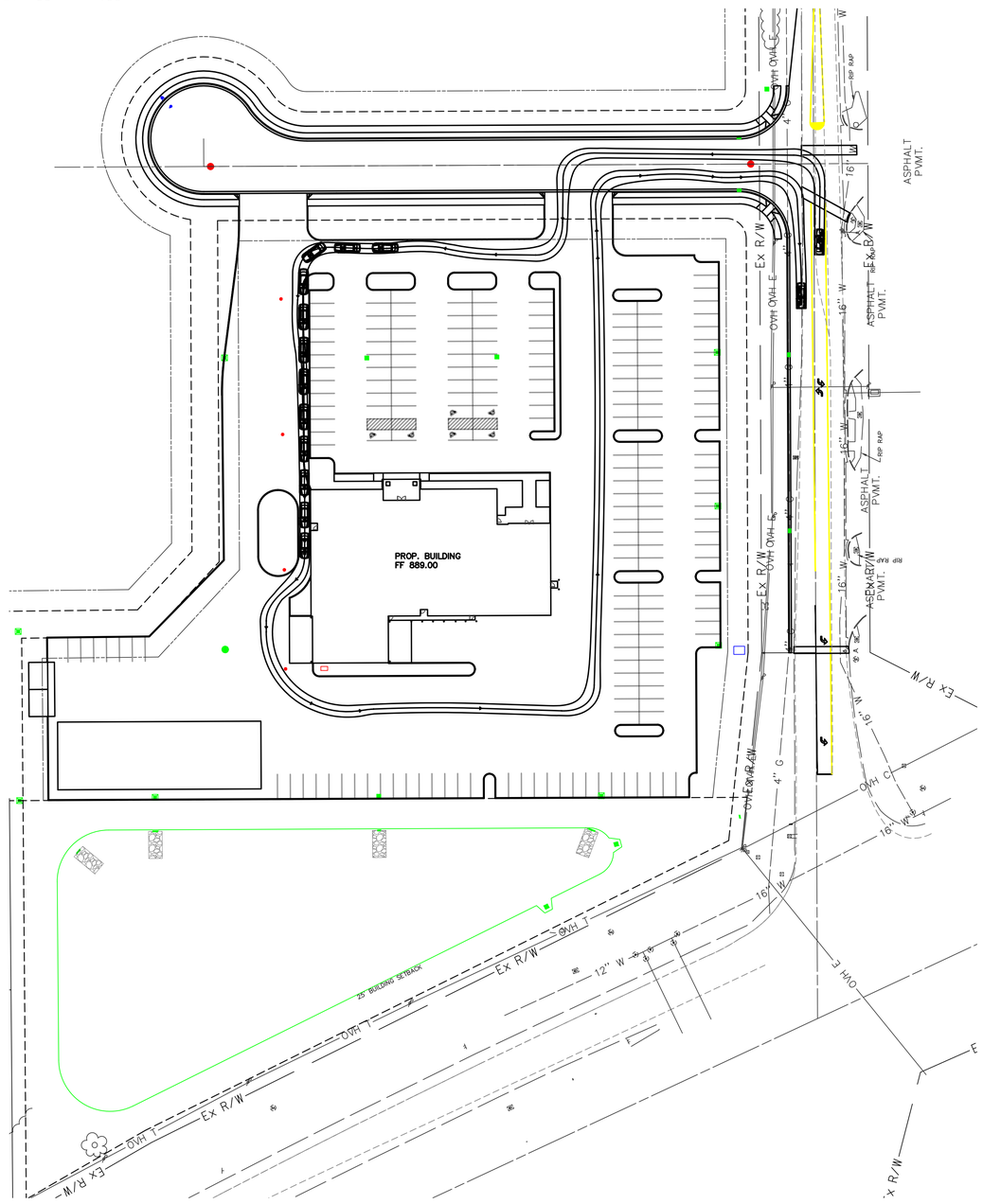

App Architecture
creative focused design
615 Woodside Drive, Englewood, Ohio 45322
T 937.836.8898 F 937.832.3666
www.app-arch.com

STATE OF OHIO
ANDREW T. SHUMAN
71386
REGISTERED
PROFESSIONAL ENGINEER

MIAMI COUNTY ONE STOP CENTER

BOARD OF COMMISSIONERS FOR MIAMI COUNTY, OHIO

BARNHART ROAD, TROY, OHIO 45373

ISSUE

NO.	DATE	DESCRIPTION
1	04/08/2022	FOR CONSTRUCTION

DATE	04/08/22
JOB NO.	3923.00
DRAWN	JAC
CHECKED	ATS

COPYRIGHT © 2022 - App Architecture, Inc.

TITLE
VEHICLE TURN TEMPLATE

SHEET NO.
C5.4

Choice One Engineering

MIAMI COUNTY ONE STOP CENTER - SWPPP

CITY OF TROY
MIAMI COUNTY, OHIO
INDEX OF SHEETS

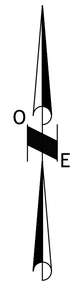

VICINITY MAP

SWPPP TITLE SHEET	C6.1
SWPPP GENERAL EROSION CONTROL NOTES AND DETAILS	C6.2–6.4
SWPPP SITE EROSION CONTROL PLAN	C6.5

SWPPP NOTE

THIS STORMWATER POLLUTION PREVENTION PLAN (SWPPP) HAS BEEN PREPARED FOR **THE MIAMI COUNTY COMMISSIONERS** FOR THE PERFORMANCE OF **THE ONE STOP SHOP PROJECT IN MIAMI COUNTY, OHIO**. ALL WORK SHALL BE PER AND COMPLY WITH THE OEPA CONSTRUCTION SITE STORM WATER GENERAL PERMIT, PERMIT #OHC000005. THIS INCLUDES FILING A CO–PERMITTEE NOI FORM WITH THE OEPA FOR ALL OPERATORS ENGAGED IN SITE WORK ON THE SITE. CONTRACTOR SHALL FOLLOW THE SPECIFICATIONS, INSTALLATION, MAINTENANCE AND REQUIREMENTS OF ODOT'S CURRENT SUPPLEMENTAL SPECIFICATION 832 "TEMPORARY SEDIMENT AND EROSION CONTROL." COMPLIANCE WITH SUPPLEMENTAL SPECIFICATION 832 SHALL INCLUDE THE STANDARD CONSTRUCTION DRAWING REFERENCES LISTED IN SECTION 832.03, BUT SHALL NOT INCLUDE SECTION 832.11 "INSPECTIONS AND SWPPP UPDATES." ALL INSPECTIONS AND SWPPP UPDATES SHALL BE PER THE OEPA CONSTRUCTION SITE STORM WATER GENERAL PERMIT, PERMIT #OHC000005. ALL WORK SHALL ALSO BE PER THE CURRENT ODOT CMS 107.19. CONTRACTOR IS RESPONSIBLE FOR COMPLYING WITH LOCAL STORMWATER AND EROSION CONTROL REGULATIONS. CONTRACTOR IS RESPONSIBLE FOR COMPLYING WITH AND INSTALLING ALL ITEMS NOTED AND AS REQUIRED BY OEPA AND LOCAL AUTHORITIES FOR MEETING ALL STORM WATER POLLUTION PREVENTION REQUIREMENTS. **THE MIAMI COUNTY COMMISSIONERS AND THE SELECTED CONTRACTOR** SHALL BE THE RESPONSIBLE PARTY IN CHARGE OF THE SWPPP AND ASSOCIATED BMP'S.

SITE DATA

LOCATION SOIL TYPES_____**BROOKSTON & CROSBY SILTY LOAMS**
EARTH DISTURBED AREA_____**8.32 ACRES**
PROPOSED IMPERVIOUS AREA ADDED: _____**4.72 ACRES**
PRE–CONSTRUCTION RUNOFF COEFFICIENT: _____**0.50**
POST–CONSTRUCTION RUNOFF COEFFICIENT: ____**0.80**
DESCRIPTION OF PRIOR LAND USE_____**AGRICULTURAL/FARMLAND**
EXISTING QUALITY OF DISCHARGE FROM SITE____**UNTREATED IMPERVIOUS RUNOFF**
IMMEDIATE RECEIVING WATERS: _____**ON–SITE UNDERGROUND DETENTION**
SUBSEQUENT RECEIVING WATERS: _____**COUNTY STORM SEWER**
LATITUDE **40.023040°** LONGITUDE **–84.240731°**

WATERS EDGE NOTE

ALL MATERIAL AND EQUIPMENT STAGING OR STORAGE AREAS, DEWATERING AREAS, CONCRETE TRUCK WASH OUT AREAS, CONSTRUCTION ACCESS LOCATIONS, AND VEHICLE FUELING AND REFUELING LOCATIONS MUST BE LOCATED A MINIMUM OF 100' FROM ANY CREEK/RIVER/STREAM WATERS EDGE.

CLEAN STORM SYSTEM NOTE

IMMEDIATELY PRIOR TO FINAL COMPLETION OF THE PROJECT, CONTRACTOR SHALL ENSURE THE ENTIRE STORM SYSTEM, INCLUDING BUT NOT LIMITED TO, THE DETENTION/RETENTION BASIN(S), CATCH BASINS, MANHOLES, PIPING, UNDERDRAINS AND UNDERDRAIN TRENCHES ARE FREE FROM SEDIMENTATION AND OTHER POLLUTANTS AND FOREIGN MATERIALS AND ARE TO BE CLEANED AS NEEDED TO ENSURE MAXIMUM STORMWATER QUALITY AND FULL FUNCTIONALITY.

OFFSITE CONSTRUCTION ACTIVITIES

IT IS EXPECTED ALL CONSTRUCTION ACTIVITIES WILL TAKE PLACE ON SITE.

SPILL REPORTING REQUIREMENTS

IN THE EVENT OF A SMALL RELEASE (LESS THAN 25 GALLONS) OF PETROLEUM WASTE, SPECIAL HANDING PROCEDURES MUST BE USED. IN THE EVENT OF A LARGE RELEASE (25 GALLONS OR MORE) OF PETROLEUM WASTE, YOU MUST CONTACT THE OHIO EPA (AT 1–800–282–9378), THE LOCAL FIRE DEPARTMENT, AND THE LOCAL EMERGENCY PLANNING COMMITTEE (LEPC) WITHIN 30 MINUTES OF A SPILL OF 25 OR MORE GALLONS.

VEHICLE FUELING

VEHICLE FUELING AND MAINTENANCE WILL BE PERFORMED VIA A SMALL REFUEL TANK ON THE BACK OF A PICK–UP TRUCK.

OPEN BURNING NOTE

OPEN BURNING IS NOT PERMITTED IN THE CORPORATION LIMIT.

CONTACT INFORMATION

FACILITY SITE LOCATION: **NORTHWEST CORNER OF INTERSECTION OF BARNHART ROAD AND W MARKET STREET, TROY, OHIO.**
OWNER: **MIAMI COUNTY COMMISSIONERS, LEIGH WILLIAMS, 937–440–5910, 201 W MAIN STREET, TROY, OHIO 45373, lwilliams@co.miami.oh.us**
SWPPP CONTACT/CONTRACTOR CONTACT – **TBD**

SWPPP AND INSPECTION REPORTS LOCATION

NOTE: THE SWPPP AND INSPECTION REPORTS WILL BE KEPT ON–SITE IN THE JOB TRAILER/FOREMAN'S PICK–UP.

WASTE DISPOSAL NOTE

CONTAINERS (e.g. DUMPSTERS, DRUMS) MUST BE AVAILABLE FOR THE DISPOSAL OF DEBRIS, TRASH, HAZARDOUS MATERIAL AND PETROLEUM WASTES. ALL CONTAINERS MUST BE COVERED AND LEAK–PROOF.

CLEAN HARD FILL NOTE

NO CLEAN CONSTRUCTION WASTES SHALL BE DISPOSED OF INTO THE PROPERTY.

FUELING AND STAGING NOTE

CONTRACTOR'S STAGING AND STORAGE AREA WILL BE LOCATED WITHIN CONSTRUCTION LIMITS OF THE PROJECT. FUEL TANKS AND OTHER HAZARDOUS MATERIALS TO BE SAFELY STORED, PROTECTED, AND PROPERLY HANDLED BY CONTRACTOR. CONTRACTOR SHALL TAKE ALL NECESSARY MEASURES TO ENSURE NO POLLUTANTS FROM THE STAGING/STORAGE AREA LEAVE THE SITE OR ENTER ADJACENT SURFACE WATERS OR THE STORM SYSTEM. CONTRACTOR SHALL CLEAN UP AND PROPERLY DISPOSE OF ANY WASTE MATERIALS.

SOIL STOCKPILE NOTE

CONTRACTOR'S SHALL LOCATE SOIL STOCKPILE AREAS WITHIN THE PROJECT AREA SO AS NOT TO BE WITHIN THE IMMEDIATE PROXIMITY OF ANY SURFACE WATERS OR STORM INLET STRUCTURES. CONTRACTOR SHALL TAKE ALL NECESSARY MEASURES TO ENSURE NO POLLUTANTS FROM THE STOCKPILE AREA LEAVE THE SITE OR ENTER ADJACENT SURFACE WATERS OR THE STORM SYSTEM. THESE MEASURES MAY INCLUDE BUT SHALL NOT BE LIMITED TO INSTALLING FILTER FABRIC FENCE AROUND STOCKPILE, TEMPORARILY COVERING THE STOCKPILE AND/OR TEMPORARILY SEEDING THE STOCKPILE.

DEWATERING NOTE

PUMPING OF SEDIMENT LADEN WATER FROM TRENCHES OR ANY OTHER EXCAVATIONS DIRECTLY INTO ANY SURFACE WATERS, DITCH OR STREAM CORRIDORS, ANY WETLANDS OR STORM SEWERS IS PROHIBITED. ALL SUCH WATER SHALL BE PROPERLY FILTERED OR SETTLED TO REMOVE SOIL PARTICLES PRIOR TO ITS RELEASE. IF AN AREA OF THE SITE OR TRENCH NEEDS DEWATERED, IT SHOULD BE PUMPED FROM A SUMP PIT WITH A SOCK FILTER OR OTHER TYPE OF FILTERING DEVICE ON THE DISCHARGE OF THE HOSE. DO NOT ALLOW DISCHARGED WATER TO PASS OVER DISTURBED GROUND. IF THE DISCHARGE WATER IS BEING PUMPED INTO A SEDIMENT POND THEN NO FILTER IS REQUIRED AT THE END OF THE HOSE. IF THE GROUNDWATER MUST BE LOWERED, THE WATER MAY BE FREELY DISCHARGED AS LONG AS THE WATER REMAINS CLEAN. DO NOT CO–MINGLE CLEAN GROUND WATER WITH SEDIMENT LADEN WATER OR DISCHARGE IT BY ALLOWING IT TO PASS OVER DISTURBED GROUND.

LOG/DOCUMENTATION SHEETS

AS PART OF THE SWPPP, THE CONTRACTOR SHALL MAINTAIN LOG/DOCUMENTATION SHEETS FOR THE FOLLOWING:
1) A SIGNATURE LOG CONTAINING THE SIGNATURES OF ALL CONTRACTORS AND SUBCONTRACTORS INVOLVED IN THE IMPLEMENTATION OF THE SWPPP AS PROOF ACKNOWLEDGING THAT THEY REVIEWED AND UNDERSTAND THE CONDITIONS AND RESPONSIBILITIES OF THE SWPPP.
2) A GRADING AND STABILIZATION LOG DOCUMENTING THE PROJECTS GRADING AND STABILIZATION ACTIVITIES AND
3) A SWPPP AMENDMENT LOG DOCUMENTING CHANGES/AMENDMENTS TO THE SWPPP, WHICH OCCUR AFTER CONSTRUCTION ACTIVITIES COMMENCE.

Choice One Engineering
440 E. HOEWISHER ROAD • SIDNEY, OHIO 45365 • 937.497.0200
8956 GLENDALE MILFORD ROAD, SUITE 1 • LOVELAND, OHIO 45140 513.239.8554
www.CHOICEONEENGINEERING.com

APRIL 8, 2022

PROJECT DESCRIPTION

THIS PROJECT CONSISTS OF THE CONSTRUCTION A NEW BUILDING AND ASSOCIATED DRIVES AND PARKING. SITE WORK TO INCLUDE STORM SEWER, SANITARY SEWER, WATER, SITE GRADING, PAVEMENT WORK AND BUILDING CONSTRUCTION.

PROJECT WORK CONSTRUCTION DATES

START: **SPRING 2021**
ESTIMATED COMPLETION: **WINTER 2021**

EROSION CONTROL NOTES

A. INSTALL AND MAINTAIN FILTER FABRIC FENCE AND INLET PROTECTION WHERE SHOWN AND AS NEEDED TO MINIMIZE SEDIMENT LADEN WATER FROM LEAVING THE SITE OR ENTERING ANY STORM SYSTEM, ADJACENT DITCHES, STREAMS ETC. IF STORMWATER RUNOFF CONTAINING SEDIMENTS IS FOUND TO BE LEAVING THE PROJECT SITE IN AN AREA WHERE NO BMP/CONTROL MEASURE IS SHOWN OR IN PLACE, CONTRACTOR SHALL IMMEDIATELY INSTALL THE APPROPRIATE BMP/CONTROL MEASURE AS NEEDED TO REMEDY THE SITUATION (TYP. INLET PROTECTION, FILTER FABRIC FENCE, ETC.).

B. INSTALL INLET PROTECTION ON ALL STORM INLET STRUCTURES (YARD DRAINS, CATCH BASINS, MANHOLES WITH GRATED LIDS, ETC.) AND TO ANY EXISTING STORM STRUCTURES WITHIN THE PROJECT AREA WHICH MAY RECEIVE RUNOFF FROM THE CONSTRUCTION SITE AS NEEDED. INLET PROTECTION MAY CONSIST OF DEVICES SUCH AS SEDCAGE (WWW.SEDCATCH.COM), DANDY BAGS, SEDIGUARD FILTERS, FLEXSTORM INLET FILTERS, SEDIMENT FENCE OR OTHER DEVICES WHICH ARE EFFECTIVE AT MINIMIZING THE AMOUNT OF SEDIMENT ENTERING THE STRUCTURE.

C. CONTRACTOR IS RESPONSIBLE FOR IMMEDIATELY CLEANING UP ANY MUD, DIRT AND DEBRIS WHICH IS TRACKED OR SPILLED ONTO THE ROADWAYS.

D. PRE CONSTRUCTION – CONTRACTOR IS RESPONSIBLE TO INSTALL A CONSTRUCTION ENTRANCE AS NEEDED TO MINIMIZE ANY MUD, DIRT AND DEBRIS TRACKED ONTO THE ROADWAYS.

E. DURING CONSTRUCTION – THE CONTRACTOR MUST MAINTAIN EROSION CONTROL UNTIL AREA IS STABILIZED INCLUDING TEMPORARY SEEDING AS NEEDED. CONTRACTOR SHALL TEMPORARYILY SEED ALL CRITICAL EXPOSED SLOPES TO MINIMIZE SEDIMENT RUNOFF.

F. FINAL/POST CONSTRUCTION – CONTRACTOR SHALL SEED AND MULCH ALL DISTURBED AREAS. CONTRACTOR SHALL ENSURE GRASS IS PERMANENTLY AND PROPERLY ESTABLISHED IN ALL AREAS WHERE GRASS IS SPECIFIED. ALL SEDIMENT AND EROSION CONTROL STRUCTURES, INCLUDING SEDIMENT FENCE, SHALL REMAIN IN PLACE UNTIL GRASS IS IN PLACE AND SITE IS STABILIZED. ONCE SITE IS STABILIZED AND ALL CONSTRUCTION IS COMPLETE, ALL SEDIMENT FENCE, INLET PROTECTION AND ANY OTHER TEMPORARY BMP'S SHALL BE REMOVED FROM THE SITE.

BMP NOTES

FOR ALL BMP'S INSTALLED, ENSURE THAT THE PONDING OF WATER BEHIND THE BMP WILL NOT DAMAGE PROPERTY OR POSE A SAFETY THREAT. IF PERIODIC INSPECTIONS OR OTHER INFORMATION INDICATES A CONTROL MEASURE/BMP HAS BEEN USED INAPPROPRIATELY, THE CONTRACTOR MUST REPLACE AND ADJUST THE CONTROL/BMP TO MEET SITE CONDITIONS AS REQUIRED. THE CONTRACTOR SHALL ADJUST THE SWPPP AND ITS CONTROLS/BMPS AND THEIR QUANTITIES TO MEET FIELD CONDITIONS AND THE OHIO EPA'S NATIONAL POLLUTANT DISCHARGE ELIMINATION SYSTEM (NPDES) CONSTRUCTION ACTIVITIES GENERAL PERMIT.

MAINTENANCE NOTE

THE CONTRACTOR SHALL BE SOLELY RESPONSIBLE TO ENSURE ALL TEMPORARY AND PERMANENT CONTROL PRACTICES SHALL BE MAINTAINED AND REPAIRED AS NEEDED TO ENSURE CONTINUED PERFORMANCE OF THEIR INTENDED FUNCTION. ALL SEDIMENT CONTROL PRACTICES MUST BE MAINTAINED IN A FUNCTIONAL CONDITION UNTIL ALL UP–SLOPE AREAS THEY CONTROL ARE PERMANENTLY STABILIZED. THE SWP3 SHALL BE DESIGNED TO MINIMIZE MAINTENANCE REQUIREMENTS. THE APPLICANT SHALL PROVIDE A DESCRIPTION OF MAINTENANCE PROCEDURES NEEDED TO ENSURE THE CONTINUED PERFORMANCE OF CONTROL PRACTICES.

SWPPP AND INSPECTION AVAILABILITY AND UPDATES NOTE

THE CONTRACTOR SHALL BE SOLELY RESPONSIBLE TO ENSURE THE IMMEDIATE AVAILABILITY OF THE SWPPP AND INSPECTION REPORTS ON–SITE. THE CONTRACTOR SHALL ALSO BE SOLELY RESPONSIBLE TO PERFORM AND DOCUMENT ALL REQUIRED SWPPP INSPECTIONS AND ALL UPDATES AND AMENDMENTS TO THE SWPPP.

DOCUMENTATION AND GOVERNMENT INSPECTION NOTE

CONTRACTOR(S) SHALL PROVIDE THE OWNER'S REPRESENTATIVE A WRITTEN COPY OF THEIR CO–PERMITTEE APPLICATION AND ANY OTHER DOCUMENTATION THE CONTRACTOR(S) MAY SEND OR RECEIVE FROM THE OEPA OR ANY OTHER GOVERNING AUTHORITIES.

IF AN INSPECTOR OR REPRESENTATIVE FROM THE OEPA OR ANY OTHER GOVERNING AUTHORITY IS ON–SITE, THE CONTRACTOR SHALL IMMEDIATELY CONTACT AND NOTIFY THE OWNER'S REPRESENTATIVE.

App Architecture
creative focused design
625 Woodside Drive, Englewood, Ohio 45322
T 937.836.8898 F 937.832.3666
www.app-arch.com

STATE OF OHIO
ANDREW T. SHUMAN
71386
REGISTERED
PROFESSIONAL ENGINEER

MIAMI COUNTY ONE STOP CENTER
BOARD OF COMMISSIONERS FOR MIAMI COUNTY, OHIO
BARNHART ROAD, TROY, OHIO 45373

ISSUE

NO.	DATE	DESCRIPTION
1	04/08/2022	FOR CONSTRUCTION

DATE	04/08/22
JOB NO.	3923.00
DRAWN	JAC
CHECKED	ATS

COPYRIGHT © 2022 - App Architecture, Inc.

TITLE
SWPPP TITLE CHEET

SHEET NO.
C6.1

IMPLEMENTATION SCHEDULE (EROSION CONSTRUCTION SEQUENCE)

THE CONTRACTOR OR ITS APPOINTED REPRESENTATIVES WILL ASSUME RESPONSIBILITY FOR INSTALLATION, INSPECTION AND MAINTENANCE OF ALL SOIL EROSION CONTROL MEASURES DURING CONSTRUCTION. THE INSTALLATION OF THE SOIL EROSION CONTROL MEASURES WILL BE COMPLETED, AS FOLLOWS:

A. PRIOR TO ANY GRADING OR EARTHWORK:
A–1. SILT FENCE AND INLET PROTECTION (ON EX. STORM STRUCTURES) TO BE INSTALLED AS SHOWN ON SWPPP
A–2. INSTALL CONSTRUCTION ENTRANCE(S) IF NEEDED AS SHOWN ON SWPPP. INSTALLATION OF ALL OTHER EROSION AND SEDIMENT CONTROL MEASURES, E.G. ROCK CHECK DAMS, CONCRETE WASHOUT PIT, SEDIMENT BASIN, ETC.

B. PERFORM ROUGH GRADING, INSTALL UTILITIES, BUILDINGS, PAVEMENT:
B–1. CLEAR AND GRUB AREA AS NEEDED
B–2. PERFORM SITE GRADING. INSTALL BUILDING(S)
B–3. INSTALL SANITARY, STORM, WATER LINES, OTHER UTILITIES, GRAVEL BASE, AND CURB AND GUTTER, AS PER PLAN(S), INSTALL INLET PROTECTION ON ALL PROPOSED STORM INLET STRUCTURES AS INDICATED ON THE PLANS AS SOON AS THEY ARE INSTALLED.
B–4 PERFORM TEMPORARY SEEDING AS NEEDED ON ANY DISTURBED AREAS PER THE TIME REQUIREMENTS FOR TEMPORARY SEEDING SPECIFIED ON THIS DRAWING.
B–5 INSTALL PAVEMENT.

C. PERFORM FINAL GRADING:
C–1. PLACE TOPSOIL AND PERFORM FINAL RAKING AND GRADING ON ALL DISTURBED AREAS.
C–2. ALL DISTURBED AREAS SHALL BE PERMANENTLY STABILIZED (SEEDED AND/OR MULCHED).
C–3. CLEAN UP SITE, AND ONCE SITE HAS REACHED FINAL STABILIZATION REMOVE ALL TEMPORARY BMP'S.

NOTES: A) CARE WILL BE TAKEN NOT TO DISTURB ANY EXISTING NATURAL VEGETATION NOT INVOLVED IN THE CONSTRUCTION PROCESS, WHENEVER POSSIBLE. B) TIMELY INSPECTIONS OF THE EROSION CONTROL MEASURES WILL BE MADE, BY THE CONTRACTOR, EVERY 7 DAYS, AND/OR AFTER ANY RAINFALL OF AT LEAST 1/2" IN A 24–HOUR PERIOD. REPORTS MUST BE KEPT ON–SITE AND SUPPLIED TO THE GOVERNING AUTHORITY IF REQUESTED.

INSPECTION SCHEDULE

A. THE SITE WILL BE INSPECTED PER OHIO EPA PERMIT No. OHC000005:

PART III.G.2.i
INSPECTIONS. THE PERMITTEE SHALL ASSIGN "QUALIFIED INSPECTION PERSONNEL" TO CONDUCT INSPECTIONS TO ENSURE THAT THE CONTROL PRACTICES ARE FUNCTIONAL AND TO EVALUATE WHETHER THE SWP3 IS ADEQUATE AND PROPERLY IMPLEMENTED IN ACCORDANCE WITH THE SCHEDULE PROPOSED IN PART III.G.1.G OF THE OHC000005 PERMIT OR WHETHER ADDITIONAL CONTROL MEASURES ARE REQUIRED. AT A MINIMUM, PROCEDURES IN A SWP3 SHALL PROVIDE THAT ALL CONTROLS ON THE SITE ARE INSPECTED:
* AFTER ANY STORM EVENT GREATER THAN ONE–HALF INCH OF RAIN PER 24–HOUR PERIOD BY THE END OF THE NEXT CALENDAR DAY, EXCLUDING WEEKENDS AND HOLIDAYS UNLESS WORK IS SCHEDULED; AND
* ONCE EVERY SEVEN CALENDAR DAYS.

THE INSPECTION FREQUENCY MAY BE REDUCED TO AT LEAST ONCE EVERY MONTH FOR DORMANT SITES IF:
* THE ENTIRE SITE IS TEMPORARILY STABILIZED OR
* RUNOFF IS UNLIKELY DUE TO WEATHER CONDITIONS FOR EXTENDED PERIODS OF TIME (E.G. SITE IS COVERED WITH SNOW, ICE, OR THE GROUND IS FROZEN).

THE BEGINNING AND ENDING DATES OF ANY REDUCED INSPECTION FREQUENCY SHALL BE DOCUMENTED IN THE SWP3. ONCE A DEFINABLE AREA HAS ACHIEVED FINAL STABILIZATION, THE AREA MAY BE MARKED ON THE SWP3 AND NO FURTHER INSPECTION REQUIREMENTS SHALL APPLY TO THAT PORTION OF THE SITE.

FOLLOWING EACH INSPECTION, A CHECKLIST MUST BE COMPLETED AND SIGNED BY THE QUALIFIED INSPECTION PERSONNEL REPRESENTATIVE. AT A MINIMUM, THE INSPECTION REPORT SHALL INCLUDE:
i. THE INSPECTION DATE;
ii. NAMES, TITLES, AND QUALIFICATIONS OF PERSONNEL MAKING THE INSPECTION;
iii. WEATHER INFORMATION FOR THE PERIOD SINCE THE LAST INSPECTION (OR SINCE COMMENCEMENT OF CONSTRUCTION ACTIVITY IF THE FIRST INSPECTION) INCLUDING A BEST ESTIMATE OF THE BEGINNING OF EACH STORM EVENT, DURATION OF EACH STORM EVENT, APPROXIMATE AMOUNT OF RAINFALL FOR EACH STORM EVENT (IN INCHES), AND WHETHER ANY DISCHARGES OCCURRED;
iv. WEATHER INFORMATION AND A DESCRIPTION OF ANY DISCHARGES OCCURRING AT THE TIME OF THE INSPECTION;
v. LOCATION(S) OF DISCHARGES OF SEDIMENT OR OTHER POLLUTANTS FROM THE SITE;
vi. LOCATION(S) OF BMPS THAT NEED TO BE MAINTAINED;
vii. LOCATION(S) OF BMPS THAT FAILED TO OPERATE AS DESIGNED OR PROVED INADEQUATE FOR A PARTICULAR LOCATION;
viii. LOCATION(S) WHERE ADDITIONAL BMPS ARE NEEDED THAT DID NOT EXIST AT THE TIME OF INSPECTION; AND
ix. CORRECTIVE ACTION REQUIRED INCLUDING ANY CHANGES TO THE SWP3 NECESSARY AND IMPLEMENTATION DATES.

DISTURBED AREAS AND AREAS USED FOR STORAGE OF MATERIALS THAT ARE EXPOSED TO PRECIPITATION SHALL BE INSPECTED FOR EVIDENCE OF OR THE POTENTIAL FOR POLLUTANTS ENTERING THE DRAINAGE SYSTEM. EROSION AND SEDIMENT CONTROL MEASURES IDENTIFIED IN THE SWP3 SHALL BE OBSERVED TO ENSURE THAT THOSE ARE OPERATING CORRECTLY. DISCHARGE LOCATIONS SHALL BE INSPECTED TO ASCERTAIN WHETHER EROSION AND SEDIMENT CONTROL MEASURES ARE EFFECTIVE IN PREVENTING SIGNIFICANT IMPACTS TO THE RECEIVING WATERS. LOCATIONS WHERE VEHICLES ENTER OR EXIT THE SITE SHALL BE INSPECTED FOR EVIDENCE OF OFF–SITE VEHICLE TRACKING.

THE PERMITTEE SHALL MAINTAIN FOR THREE YEARS FOLLOWING THE SUBMITTAL OF A NOTICE OF TERMINATION FORM, A RECORD SUMMARIZING THE RESULTS OF THE INSPECTION, NAMES(S) AND QUALIFICATIONS OF PERSONNEL MAKING THE INSPECTION, THE DATE(S) OF THE INSPECTION, MAJOR OBSERVATIONS RELATING TO THE IMPLEMENTATION OF THE SWP3 AND A CERTIFICATION AS TO WHETHER THE FACILITY IS IN COMPLIANCE WITH THE SWP3 AND THE PERMIT AND IDENTIFY ANY INCIDENTS OF NON–COMPLIANCE. THE RECORD AND CERTIFICATION SHALL BE SIGNED IN ACCORDANCE WITH PART V.G. OF THIS PERMIT.

i. WHEN PRACTICES REQUIRE REPAIR OR MAINTENANCE. IF THE INSPECTION REVEALS THAT A CONTROL PRACTICE IS IN NEED OF REPAIR OR MAINTENANCE, WITH THE EXCEPTION OF A SEDIMENT SETTLING POND, IT SHALL BE REPAIRED OR MAINTAINED WITHIN 3 DAYS OF THE INSPECTION. SEDIMENT SETTLING PONDS SHALL BE REPAIRED OR MAINTAINED WITHIN 10 DAYS OF THE INSPECTION.

ii. WHEN PRACTICES FAIL TO PROVIDE THEIR INTENDED FUNCTION. IF THE INSPECTION REVEALS THAT A CONTROL PRACTICE FAILS TO PERFORM ITS INTENDED FUNCTION AND THAT ANOTHER, MORE APPROPRIATE CONTROL PRACTICE IS REQUIRED, THE SWP3 SHALL BE AMENDED AND THE NEW CONTROL PRACTICE SHALL BE INSTALLED WITHIN 10 DAYS OF THE INSPECTION.

iii. WHEN PRACTICES DEPICTED ON THE SWP3 ARE NOT INSTALLED. IF THE INSPECTION REVEALS THAT A CONTROL PRACTICE HAS NOT BEEN IMPLEMENTED IN ACCORDANCE WITH THE SCHEDULE CONTAINED IN PART III.G.1.H OF THIS PERMIT, THE CONTROL PRACTICE SHALL BE IMPLEMENTED WITHIN 10 DAYS FROM THE DATE OF THE INSPECTION. IF THE INSPECTION REVEALS THAT THE PLANNED CONTROL PRACTICE IS NOT NEEDED, THE RECORD SHALL CONTAIN A STATEMENT OF EXPLANATION AS TO WHY THE CONTROL PRACTICE IS NOT NEEDED.

B. VEGETATIVE PLANTINGS – SPRING PLANTINGS WILL BE CHECKED DURING SUMMER OR EARLY FALL.
C. REPAIRS – ANY EROSION CONTROL MEASURES, STRUCTURAL MEASURES, OR OTHER RELATED ITEMS IN NEED OF REPAIR WILL BE MADE WITHIN 7 DAYS.
D. MOWING – DRAINAGE WAYS, DITCHES, AND OTHER AREAS THAT SUPPORT A DESIGNED FLOW OF WATER WILL BE MOWED REGULARLY TO MAINTAIN THAT FLOW.
E. FERTILIZATION – SEEDED AREAS WHERE THE SEED HAS NOT PRODUCED A GOOD COVER WILL BE INSPECTED AND FERTILIZED AS NECESSARY.

CONSTRUCTION ENTRANCE

A. STONE SIZE – 2" STONE SHALL BE USED, OR RECYCLED CONCRETE EQUIVALENT.
B. LENGTH – THE CONSTRUCTION ENTRANCE SHALL BE AS LONG AS REQUIRED TO STABILIZE HIGH TRAFFIC AREAS, BUT NOT LESS THAN 70' (EXCEPT ON SINGLE RESIDENCE LOT WHERE A 30' MINIMUM LENGTH APPLIES).
C. THICKNESS – THE STONE LAYER SHALL BE AT LEAST 6" THICK.
D. WIDTH – THE ENTRANCE SHALL BE AT LEAST 10' WIDE, BUT NOT LESS THAN THE FULL WIDTH AT POINTS WHERE INGRESS OR EGRESS OCCURS.
E. BEDDING – A GEOTEXTILE SHALL BE PLACED OVER THE ENTIRE AREA PRIOR TO PLACING STONE. IT SHALL HAVE A GRAB TENSILE STRENGTH OF AT LEAST 200 LBS. AND A MULLEN BURST STRENGTH OF AT LEAST 190 LBS.
F. CULVERT – A PIPE OR CULVERT SHALL BE CONSTRUCTED UNDER THE ENTRANCE, IF NEEDED, TO PREVENT SURFACE WATER FLOWING ACROSS THE ENTRANCE FROM BEING DIRECTED OUT ONTO PAVED SURFACES (IF DRIVE IS PLACED ACROSS A DITCH).
G. WATER BAR – A WATER BAR SHALL BE CONSTRUCTED AS PART OF THE CONSTRUCTION ENTRANCE, IF NEEDED TO PREVENT SURFACE RUNOFF FROM FLOWING THE LENGTH OF THE CONSTRUCTION ENTRANCE AND OUT ONTO PAVED SURFACES (IF DRIVE IS PLACED ON A SLOPE).
H. MAINTENANCE – TOP DRESSING OF ADDITIONAL STONE SHALL BE APPLIED AS CONDITIONS DEMAND. MUD SPILLED, DROPPED, WASHED, OR TRACKED ONTO PUBLIC ROADS, OR ANY SURFACE WHERE RUNOFF IS NOT CHECKED BY SEDIMENT CONTROLS, SHALL BE REMOVED IMMEDIATELY. REMOVAL SHALL BE ACCOMPLISHED BY SCRAPING OR SWEEPING.
I. CONSTRUCTION ENTRANCE SHALL NOT BE RELIED UPON TO REMOVE MUD FROM VEHICLES AND PREVENT OFFSITE TRACKING. VEHICLES THAT ENTER AND LEAVE THE CONSTRUCTION SITE SHALL BE RESTRICTED FROM MUDDY AREAS.
J. CONSTRUCTION ENTRANCES ARE INSTALLED TO MINIMIZE OFFSITE TRACKING OF SEDIMENTS. A STONE ACCESS DRIVE SHOULD BE INSTALLED AT EVERY POINT WHERE VEHICLES ENTER OR EXIT THE SITE. EVERY INDIVIDUAL LOT SHOULD ALSO HAVE ITS OWN DRIVE ONCE CONSTRUCTION ON THE LOT BEGINS.

NOTE: ALTERNATIVE STABILIZATION METHODS FOR CONSTRUCTION ENTRANCE/EXIT SUCH AS MANUFACTURED STEEL PLATES, GRID PLATES, ETC. OR STEEL PIPES/GRATINGS WILL ALSO BE CONSIDERED BUT WILL REQUIRE WRITTEN APPROVAL FROM THE OWNER PRIOR TO THE USE OF SUCH ALTERNATIVE METHODS AS ON–SITE CONSTRUCTION ENTRANCES/EXIT. ANY PROPOSED ALTERNATIVE METHODS SHALL SHALL BE SHOWN TO EFFECTIVELY REMOVE MUD AND DEBRIS FROM VEHICLE WHEELS PRIOR TO EXITING THE SITE.

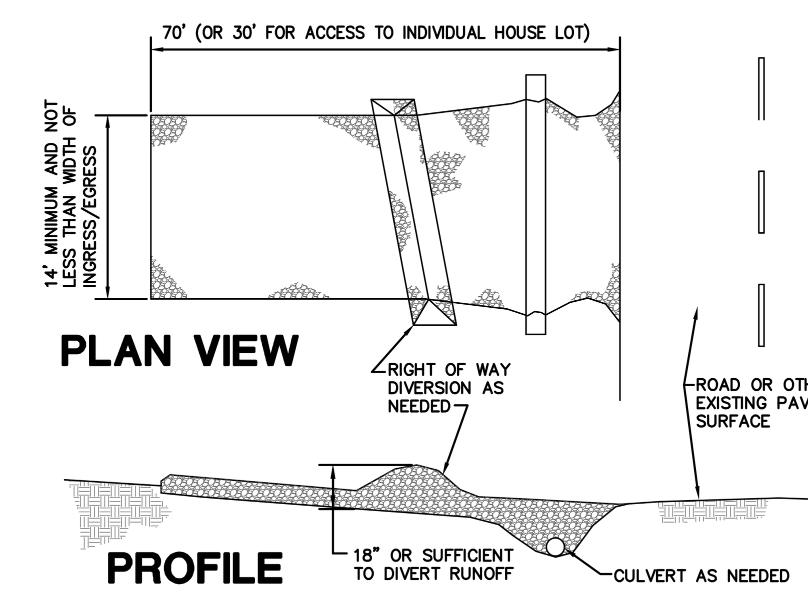

CONSTRUCTION ENTRANCE DETAIL

NON-SEDIMENT POLLUTION CONTROL

A. CONSTRUCTION PERSONNEL, INCLUDING SUBCONTRACTORS WHO MAY USE OR HANDLE HAZARDOUS OR TOXIC MATERIALS, SHALL BE MADE AWARE OF THE FOLLOWING GENERAL GUIDELINES:

DISPOSAL AND HANDLING OF HAZARDOUS AND OTHER CONSTRUCTION WASTE

DO:
* PREVENT SPILLS
* USE PRODUCTS UP
* FOLLOW LABEL DIRECTIONS FOR DISPOSAL
* REMOVE LIDS FROM EMPTY BOTTLES AND CANS WHEN DISPOSING IN TRASH
* RECYCLE WASTE WHENEVER POSSIBLE

DON'T
* DON'T POUR INTO WATERWAYS, STORM DRAINS, OR ONTO THE GROUND
* DON'T POUR DOWN THE SINK, FLOOR DRAIN, OR SEPTIC TANKS
* DON'T BURY CHEMICALS OR CONTAINERS
* DON'T BURN CHEMICALS OR CONTAINERS
* DON'T MIX CHEMICALS TOGETHER

B. CONTAINERS SHALL BE PROVIDED FOR COLLECTION OF ALL WASTE MATERIAL INCLUDING CONSTRUCTION DEBRIS, TRASH, PETROLEUM, AND ANY HAZARDOUS MATERIALS TO BE USED ON SITE. ALL WASTE MATERIAL SHALL BE DISPOSED OF AT FACILITIES APPROVED FOR THAT MATERIAL.

C. NO WASTE MATERIALS SHALL BE BURIED ON SITE. SITE PERSONNEL, INCLUDING SUBCONTRACTORS, SHALL BE NOTIFIED THAT NO CONSTRUCTION–RELATED MATERIALS ARE TO BE BURIED ON SITE.

D. MIXING, PUMPING, TRANSFERRING, OR OTHERWISE HANDLING CONSTRUCTION CHEMICALS SUCH AS FERTILIZER, LIME, ASPHALT, CONCRETE DRYING COMPOUNDS, AND ALL OTHER POTENTIALLY HAZARDOUS MATERIALS SHALL BE PERFORMED IN AN AREA AWAY FROM ANY WATERCOURSE, DITCH, OR STORM DRAIN.

E. EQUIPMENT FUELING AND MAINTENANCE, OIL CHANGING, ETC., SHALL BE PERFORMED AWAY FROM WATERCOURSES, DITCHES, OR STORM DRAINS, IN AN AREA DESIGNATED FOR THAT PURPOSE. THE DESIGNATED AREA SHALL BE EQUIPPED FOR RECYCLING OIL AND CATCHING SPILLS.

F. CONCRETE WASH WATER SHALL NOT BE ALLOWED TO FLOW TO STREAMS, DITCHES, STORM DRAINS, OR ANY OTHER WATER CONVEYANCE. A SUMP OR PIT SHALL BE CONSTRUCTED IF NEEDED TO CONTAIN CONCRETE WASH WATER.

G. IF HAZARDOUS SUBSTANCES SUCH AS OIL, DIESEL FUEL, HYDRAULIC FLUID, ANTIFREEZE, ETC. ARE SPILLED, LEAKED, OR RELEASED ONTO THE SOIL, THE SOIL SHOULD BE DUG UP AND DISPOSED OF WITH THE TRASH AT A LICENSED SANITARY LANDFILL (NOT A CONSTRUCTION/DEMOLITION DEBRIS LANDFILL). SPILLS ON PAVEMENT SHALL BE ABSORBED WITH SAWDUST OR KITTY LITTER AND DISPOSED OF WITH THE TRASH AT A LICENSED SANITARY LANDFILL. HAZARDOUS OR INDUSTRIAL WASTES SUCH AS MOST SOLVENTS, GASOLINE, OIL–BASED PAINTS, AND CEMENT CURING COMPOUNDS REQUIRE SPECIAL HANDLING. CONTACT OHIO EPA (1–800–282–9378),

H. SPILLS OF 25 GAL. OR MORE OF PETROLEUM PRODUCTS SHALL BE REPORTED TO OHIO EPA (1–800–282–9378), THE LOCAL FIRE DEPARTMENT, AND THE LOCAL EMERGENCY PLANNING COMMITTEE WITHIN 30 MIN. OF THE DISCOVERY OF THE RELEASE.

I. STREETS NEED TO BE SWEPT AS OFTEN AS NECESSARY TO KEEP THEM CLEAN AND FREE FROM SEDIMENT. SEDIMENT TO BE SWEPT BACK ONTO THE LOT – NOT DOWN THE STORM SEWER.

J. STOCKPILES OF SOIL AND OTHER MATERIALS SHALL BE STORED AWAY FROM WATERCOURSES, DITCHES, OR STORM DRAINS, AND SHALL HAVE EROSION CONTROL MATERIALS PLACED AROUND THEM.

K. ALL STREAM CROSSINGS SHALL BE CONSTRUCTED ENTIRELY OF NON–ERODIBLE MATERIAL.

PROCESS WASTEWATER/LEACHATE MANAGEMENT NOTE

ALL PROCESS WASTEWATERS (e.g. EQUIPMENT WASHING, LEACHATE ASSOCIATED WITH ON–SITE WASTE DISPOSAL, AND CONCRETE WASH–OUTS) MUST BE COLLECTED AND DISPOSED OF PROPERLY (e.g. TO A PUBLICLY–OWNED TREATMENT WORKS). THE NPDES CONSTRUCTION STORM WATER GENERAL PERMIT ONLY AUTHORIZES THE DISCHARGE OF STORM WATER AND CERTAIN UNCONTAMINATED NON–STORM WATERS. THE DISCHARGE OF NON–STORM WATERS TO WATERS OF THE STATE MAY BE IN VIOLATION OF LOCAL, STATE, AND FEDERAL LAWS OR REGULATIONS.

HANDLING OF TOXIC OR HAZARDOUS MATERIALS NOTE

NO SOLID, SANITARY, OR TOXIC WASTE IS TO BE DISPOSED OF ON THE PROJECT SITE. RECYCLING OF USED OR UNUSED HAZARDOUS MATERIALS SHALL NOT OCCUR ON SITE EITHER. AREAS DESIGNATED FOR CEMENT TRUCK WASHOUTS, AND VEHICLE FUELING SHALL NOT TAKE PLACE ON PARKING LOT BASE.

CONSTRUCTION CHEMICAL COMPOUNDS NOTE

NO MIXING OR STORAGE OF CHEMICAL COMPOUNDS SUCH AS FERTILIZERS, LIME, ASPHALT, OR CONCRETE ARE PERMITTED TO TAKE PLACE ON–SITE. ALL MIXING SHALL TAKE PLACE BEFORE ENTERING THE SITE.

CONSTRUCTION & DEMOLITION DEBRIS NOTE

ALL CONSTRUCTION AND DEMOLITION DEBRIS (C&DD) WASTE SHALL BE DISPOSED OF IN AN OHIO EPA APPROVED C&DD LANDFILL AS REQUIRED BY OHIO REVISED CODE (ORC) 3714. MATERIALS WHICH CONTAIN ASBESTOS MUST COMPLY WITH AIR POLLUTION REGULATIONS (SEE OHIO ADMINISTRATIVE CODE 3745–20).

CONTAMINATED SOILS NOTE

SOILS CONTAMINATED BY PETROLEUM OR OTHER CHEMICAL SPILLS SHALL BE HANDLED AND DISPOSED OF PROPERLY. ALL CONTAMINATED SOILS MUST BE TREATED AND/OR DISPOSED OF IN AN OHIO EPA APPROVED SOLID WASTE MANAGEMENT FACILITY OR HAZARDOUS WASTE TREATMENT, STORAGE OR DISPOSAL FACILITY (TSDFs). IF CONTAMINATION HAPPENS TO OCCUR, TARPS ARE TO BE USED TO PREVENT STORM WATER FROM COMING INTO CONTACT WITH THE MATERIAL.

CONCRETE WASHOUT NOTE

CONCRETE WASHOUT OPERATIONS SHALL TAKE PLACE WITHIN THE PROPOSED PROJECT AREA UTILIZING THE CONTRACTOR'S PORTABLE CONCRETE WASHOUT CONTAINER OR WITHIN A BERMED/CONTAINED AREA. CONTRACTOR SHALL TAKE ALL NECESSARY MEASURES TO ENSURE WASHOUT MATERIAL DOES NOT LEAVE THE WASHOUT AREA OR ENTER THE STORM SYSTEM. CONTRACTOR SHALL CLEAN UP AND PROPERLY DISPOSE OF ALL LEFTOVER WASHOUT MATERIAL.

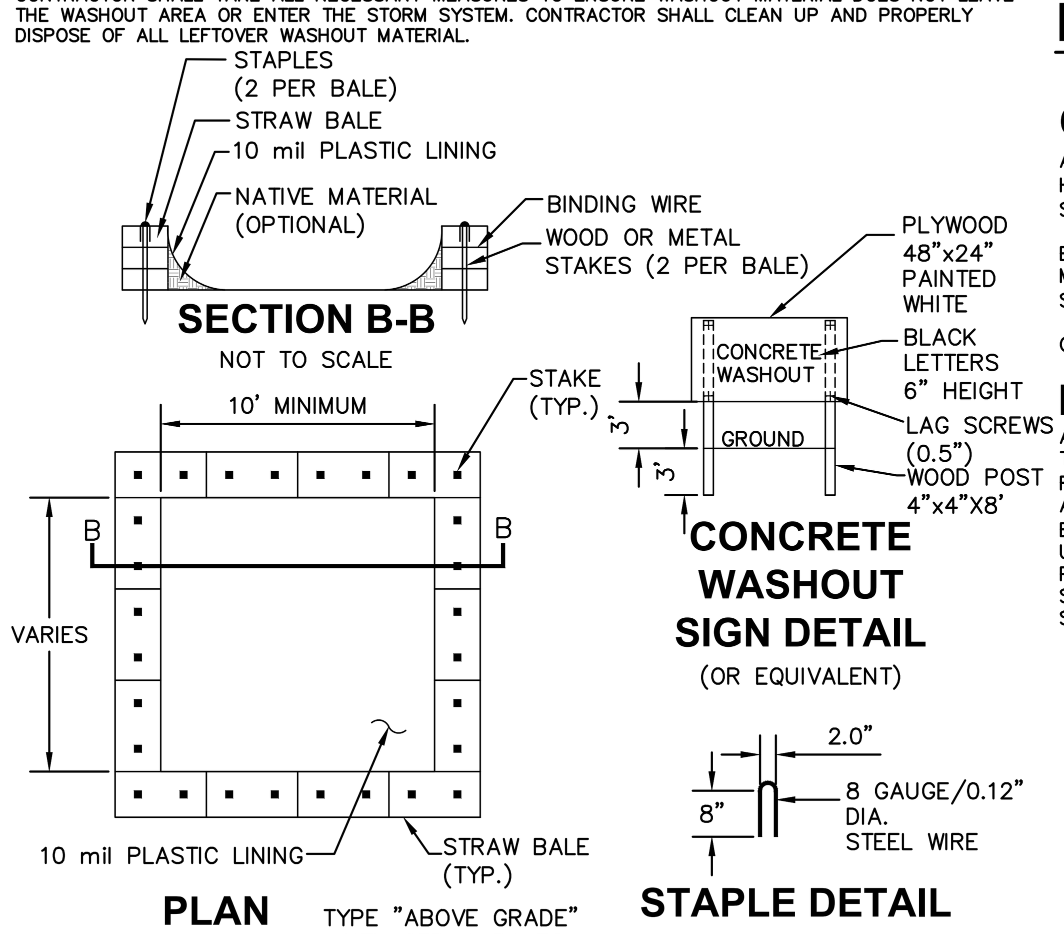

CONCRETE WASHOUT DETAIL

DUST CONTROL

DUST CONTROL SHALL BE PROVIDED AS NEEDED TO PREVENT SEDIMENT FROM BECOMING AIRBORNE. MEASURES SHALL INCLUDE WATERING VIA A WATER TRUCK OR OTHER WATERING DEVICE AS NEEDED TO REDUCE AND/OR ELIMINATE AIRBORNE DUST CREATED BY CONSTRUCTION AND CONSTRUCTION RELATED ACTIVITIES.

CONSTRUCTION OF A FILTER BARRIER (SILT FENCE)

A. SILT FENCE SHALL BE CONSTRUCTED BEFORE UPSLOPE LAND DISTURBANCE BEGINS.

B. ALL SILT FENCE SHALL BE PLACED AS CLOSE TO THE CONTOUR AS POSSIBLE SO THAT WATER WILL NOT CONCENTRATE AT LOW POINTS IN THE FENCE AND SO THAT SMALL SWALES OR DEPRESSIONS WHICH MAY CARRY SMALL CONCENTRATED FLOWS TO THE SILT FENCE ARE DISSIPATED ALONG ITS LENGTH.

C. TO PREVENT WATER PONDED BY THE SILT FENCE FROM FLOWING AROUND THE ENDS, EACH END SHALL BE CONSTRUCTED UPSLOPE SO THAT THE ENDS ARE AT A HIGHER ELEVATION.

D. WHERE POSSIBLE, SILT FENCE SHALL BE PLACED ON THE FLATTEST AREA AVAILABLE.

E. WHERE POSSIBLE, VEGETATION SHALL BE PRESERVED FOR 5' (OR AS MUCH AS POSSIBLE) UPSLOPE FROM THE SILT FENCE. IF VEGETATION IS REMOVED, IT SHALL BE REESTABLISHED WITHIN 7 DAYS FROM THE INSTALLATION OF THE SILT FENCE.

F. THE HEIGHT OF THE SILT FENCE SHALL BE A MINIMUM OF 16" ABOVE THE ORIGINAL GROUND SURFACE.

G. THE SILT FENCE SHALL BE PLACED IN A TRENCH CUT A MINIMUM OF 6" DEEP. THE TRENCH SHALL BE CUT WITH A TRENCHER, CABLE LAYING MACHINE, OR OTHER SUITABLE DEVICE WHICH WILL ENSURE AN ADEQUATELY UNIFORM TRENCH DEPTH.

H. THE SILT FENCE SHALL BE PLACED WITH THE STAKES ON THE DOWNSLOPE SIDE OF THE GEOTEXTILE AND SO THAT 8" OF CLOTH IS BELOW THE GROUND SURFACE. EXCESS MATERIAL SHALL LAY ON THE BOTTOM OF THE 6" DEEP TRENCH. THE TRENCH SHALL BE BACKFILLED AND COMPACTED.

I. SEAMS BETWEEN SECTIONS OF SILT FENCE SHALL BE OVERLAPPED WITH THE END STAKES OF EACH SECTION WRAPPED TOGETHER BEFORE DRIVING INTO THE GROUND.

J. MAINTENANCE – SILT FENCE SHALL ALLOW RUNOFF TO PASS ONLY AS DIFFUSE FLOW THROUGH THE GEOTEXTILE. ALL THE GAPS AND TEARS IN THE FENCE MUST BE ELIMINATED AND REPAIRED. IF RUNOFF OVERTOPS THE SILT FENCE, FLOWS UNDER OR AROUND THE ENDS, OR IN ANY OTHER WAY BECOMES A CONCENTRATED FLOW, ONE OF THE FOLLOWING SHALL BE PERFORMED, AS APPROPRIATE: 1) THE LAYOUT OF THE SILT FENCE SHALL BE CHANGED, 2) ACCUMULATED SEDIMENT SHALL BE REMOVED, OR 3) OTHER PRACTICES SHALL BE INSTALLED.

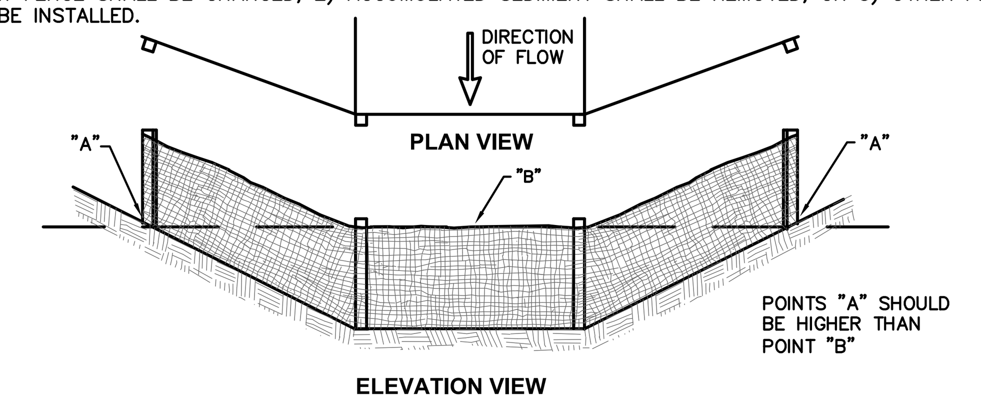

DITCH CHECK FILTER FABRIC FENCE

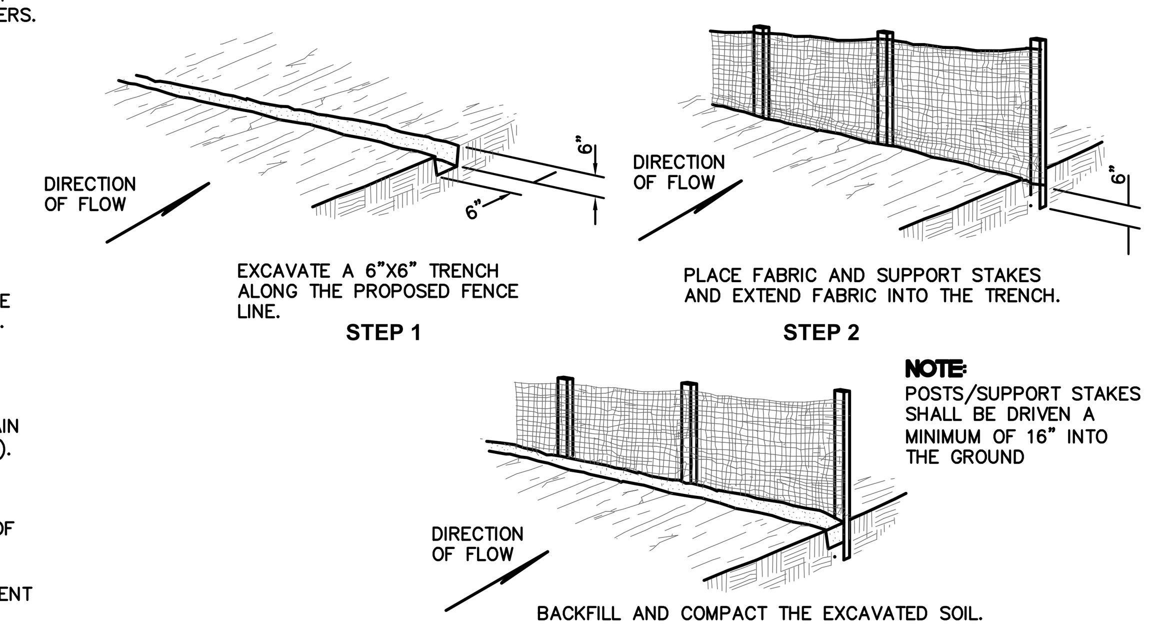

DITCH CHECK FILTER FABRIC FENCE

FILTER FABRIC FENCE DETAIL

CRITERIA FOR SILT FENCE MATERIAL

A. FENCE POSTS – THE LENGTH SHALL BE A MINIMUM OF 48" LONG. WOOD POSTS WILL BE 2"–BY–2" HARDWOOD OF SOUND QUALITY. THE MAXIMUM SPACING BETWEEN POSTS SHALL BE 5'. POSTS/SUPPORT STAKES SHALL BE DRIVEN A MINIMUM OF 16" INTO THE GROUND.

B. SILT FENCE FABRIC SHALL CONFORM TO THE AASHTO SILT FENCE SPECIFICATION 100X AND SHALL HAVE A MINIMUM 100# GRAB TENSILE. SILT FENCE SHALL ALSO CONFORM TO THE MOST RECENT ODOT STANDARD FOR SEDIMENT/SILT FENCE (TABLE 712.09–1)

C. SILT FENCE SHALL BE ATTACHED TO THE WOODEN POSTS WITH STAPLES, WIRE, ZIP TIES, OR NAILS.

PERMANENT STABILIZATION

ALL AREAS AT FINAL GRADE MUST BE PERMANENTLY STABILIZED WITHIN 7 DAYS OF REACHING FINAL GRADE. THIS IS USUALLY ACCOMPLISHED BY USING SEED AND MULCH, BUT SPECIAL MEASURES ARE SOMETIMES REQUIRED. THIS IS PARTICULARLY TRUE IN DRAINAGE DITCHES/SWALES, LOW AREAS, DETENTION POND BOTTOMS AND SIDES OR ON STEEP SLOPES. THESE MEASURES INCLUDE, BUT ARE NOT LIMITED TO, THE INSTALLATION OF EROSION CONTROL BLANKETS AND/OR MATTING, ADDITION OF TOPSOIL, OR ROCK RIP–RAP. CONTRACTOR SHALL UTILIZE THESE AND ANY OTHER SPECIAL MEASURES AS NEEDED TO PERMANENTLY STABILIZE THE SITE. PERMANENT SEEDING SHOULD BE DONE MARCH 1 TO MAY 31 AND AUGUST 1 TO SEPTEMBER 30. DORMANT SEEDING CAN BE DONE FROM NOVEMBER 20 TO MARCH 15. AT ALL OTHER TIMES OF THE YEAR, THE AREA SHOULD BE TEMPORARILY STABILIZED UNTIL A PERMANENT SEEDING CAN BE APPLIED.

AREA REQUIRING PERMANENT STABILIZATION	TIME FRAME TO APPLY EROSION CONTROLS
ANY AREAS THAT WILL LIE DORMANT FOR ONE YEAR OR MORE.	WITHIN 7 DAYS OF THE MOST RECENT DISTURBANCE.
ANY AREAS WITHIN 50' OF A SURFACE WATER OF THE STATE (STREAM, WATERWAY, WATER BODY, ETC.) AND AT FINAL GRADE	WITHIN 2 DAYS OF REACHING FINAL GRADE
ANY OTHER AREAS AT FINAL GRADE.	WITHIN 7 DAYS OF REACHING FINAL GRADE WITHIN THAT AREA.

SOILS EXPOSED NOTE

CONTRACTOR SHALL PLAN AND IMPLEMENT CONSTRUCTION AND GRADING ACTIVITIES TO MINIMIZE THE AMOUNT OF SOIL EXPOSED DURING CONSTRUCTION ACTIVITIES.

TEMPORARY SEEDING SPECIES SELECTION			
SEEDING DATES	SPECIES	L.B./1000 SQ. FT.	PER ACRE
MARCH 1 TO AUGUST 15	OATS	3	4 BUSHELS
	TALL FESCUE	1	40 LBS.
	ANNUAL RYEGRASS	1	40 LBS.
	PERENNIAL RYEGRASS	1	40 LBS.
	TALL FESCUE	1	40 LBS.
	ANNUAL RYEGRASS	1	40 LBS.
AUGUST 16 TO NOVEMBER 1	RYE	3	2 BUSHELS
	TALL FESCUE	1	40 LBS.
	ANNUAL RYEGRASS	1	40 LBS.
	WHEAT	1	2 BUSHELS
	TALL FESCUE	1	40 LBS.
	ANNUAL RYEGRASS	1	40 LBS.
	PERENNIAL RYEGRASS	1	40 LBS.
	TALL FESCUE	1	40 LBS.
	ANNUAL RYEGRASS	1	40 LBS.
NOVEMBER 1 TO SPRING SEEDING	USE MULCH ONLY, SODDING PRACTICES OR DORMANT SEEDING		
NOTE: OTHER APPROVED SEED SPECIES MAY BE SUBSTITUTED.			

SPECIFICATIONS FOR TEMPORARY SEEDING

A. TO MINIMIZE COSTS OF TEMPORARY STABILIZATION, LEAVE NATURAL COVER IN PLACE FOR AS LONG AS POSSIBLE. ONLY DISTURB AREAS YOU INTEND TO WORK WITHIN THE NEXT 14 DAYS.

B. STRUCTURAL EROSION AND SEDIMENT CONTROL PRACTICES SUCH AS DIVERSIONS AND SEDIMENT TRAPS SHALL BE INSTALLED AND STABILIZED WITH TEMPORARY SEEDING PRIOR TO GRADING THE REST OF THE CONSTRUCTION SITE.

C. THE SEEDBED SHOULD BE PULVERIZED AND LOOSE TO ENSURE THE SUCCESS OF ESTABLISHING VEGETATION. HOWEVER, TEMPORARY SEEDING SHALL NOT BE POSTPONED IF IDEAL SEEDBED PREPARATION IS NOT POSSIBLE.

D. SOIL AMENDMENTS – APPLICATIONS OF TEMPORARY VEGETATION SHALL ESTABLISH ADEQUATE STANDS OF VEGETATION WHICH MAY REQUIRE THE USE OF SOIL AMENDMENTS. SOIL TESTS SHOULD BE TAKEN ON THE SITE TO PREDICT THE NEED FOR LIME AND FERTILIZER.

E. SEEDING METHOD – SEED SHALL BE APPLIED UNIFORMLY WITH A CYCLONE SEEDER, DRILL, CULTIPACKER SEEDER, OR HYDROSEEDER. WHEN FEASIBLE, SEED THAT HAS BEEN BROADCAST SHALL BE COVERED BY RAKING OR DRAGGING AND THEN LIGHTLY PLACED USING A ROLLER OR CULTIPACKER. IF HYDROSEEDING IS USED, THE SEED AND FERTILIZER WILL BE MIXED ON SITE AND THE SEEDING SHALL BE DONE IMMEDIATELY AND WITHOUT INTERRUPTION.

MULCHING TEMPORARY SEEDING

A. APPLICATIONS OF TEMPORARY SEEDING SHALL INCLUDE MULCH WHICH SHALL BE APPLIED DURING OR IMMEDIATELY AFTER SEEDING. SEEDINGS MADE DURING OPTIMUM SEEDING DATES AND WITH FAVORABLE SOIL CONDITIONS AND ON VERY FLAT AREAS MAY NOT NEED MULCH TO ACHIEVE ADEQUATE STABILIZATION.

B. MATERIALS:
- STRAW – IF STRAW IS USED, IT SHALL BE UNROTTED SMALL GRAIN STRAW APPLIED AT THE RATE OF 2 TONS/ACRE OR 90 LBS./1,000 SQ. FT. (TWO TO THREE BALES). THE MULCH SHALL BE SPREAD UNIFORMLY BY HAND OR MECHANICALLY SO THE SOIL SURFACE IS COVERED. FOR UNIFORM DISTRIBUTION OF HAND–SPREAD MULCH, DIVIDE AREA INTO APPROXIMATELY 1,000 SQ. FT. SECTIONS AND SPREAD TWO 45 LBS. BALES OF STRAW IN EACH SECTION.
- HYDROSEEDERS – IF WOOD CELLULOSE FIBER IS USED, IT SHALL BE USED AT 2,000 LB/AC. OR 46 LBS./1,000 SQ. FT.
- OTHER – OTHER ACCEPTABLE MULCHES INCLUDE MULCH MATTINGS APPLIED ACCORDING TO MANUFACTURER'S RECOMMENDATIONS OR WOOD CHIPS APPLIED AT 6 TONS/AC.
- STRAW MULCH SHALL BE ANCHORED IMMEDIATELY TO MINIMIZE LOSS BY WIND OR WATER. ANCHORING METHODS:
  –MECHANICAL – A DISK, CRIMPER, OR SIMILAR TYPE TOOL SHALL BE SET STRAIGHT TO PUNCH OR ANCHOR THE MULCH MATERIAL INTO THE SOIL. STRAW MECHANICALLY ANCHORED SHALL NOT BE FINELY CHOPPED, BUT GENERALLY, BE LEFT LONGER THAN 6".
  –MULCH NETTINGS – NETTINGS SHALL BE USED ACCORDING TO THE MANUFACTURER'S RECOMMENDATIONS. NETTING MAY BE NECESSARY TO HOLD MULCH IN PLACE IN AREAS OF CONCENTRATION RUN OFF AND ON CRITICAL SLOPES.
  –SYNTHETIC BINDERS – SYNTHETIC BINDERS SUCH AS ACRYLIC DLR (AGRI–TAC), DCA–70, PETROSET, TERRA TACK OR EQUAL MAY BE USED AT RATES RECOMMENDED BY THE MANUFACTURER.
  –WOOD CELLULOSE FIBER – WOOD–CELLULOSE FIBER BINDER SHALL BE APPLIED AT A NET DRY WEIGHT OF 750 LBS./AC. THE WOOD–CELLULOSE FIBER SHALL BE MIXED WITH WATER AND THE MIXTURE SHALL CONTAIN A MAXIMUM OF 50 LBS./1000 GAL.

AREA REQUIRING TEMPORARY STABILIZATION	TIME FRAME TO APPLY EROSION CONTROLS
ANY DISTURBED AREAS WITHIN 50' OF A SURFACE WATER OF THE STATE (STREAM, WATERWAY, WATER BODY, ETC.) AND NOT AT FINAL GRADE.	WITHIN 2 DAYS OF THE MOST RECENT DISTURBANCE IF THE AREA WILL REMAIN IDLE FOR MORE THAN 14 DAYS
ANY DISTURBED AREAS THAT WILL BE DORMANT FOR MORE THAN 14 DAYS BUT LESS THAN 1 YEAR, AND NOT WITHIN 50' OF A SURFACE WATER OF THE STATE (STREAM, WATERWAY, WATER BODY, ETC.)	WITHIN 7 DAYS OF THE MOST RECENT DISTURBANCE WITHIN THE AREA FOR RESIDENTIAL SUBDIVISIONS, DISTURBED AREAS MUST BE STABILIZED AT LEAST 7 DAYS PRIOR TO TRANSFER OF PERMIT COVERAGE FOR THE INDIVIDUAL LOT(S).
DISTURBED AREAS THAT WILL BE IDLE OVER WINTER	PRIOR TO THE ONSET OF WINTER WEATHER
WHERE VEGETATIVE STABILIZATION TECHNIQUES MAY CAUSE STRUCTURAL INSTABILITY OR ARE OTHERWISE UNOBTAINABLE, ALTERNATIVE STABILIZATION TECHNIQUES MUST BE EMPLOYED.	

PERMANENT STABILIZATION

ODOT ITEM 659 SEEDING AND MULCHING, CLASS 1 (LAWN MIXTURE), AS PER PLAN

THIS ITEM OF WORK SHALL CONSIST OF THE WORK AS DESCRIBED IN OHIO DEPARTMENT OF TRANSPORTATION ITEM 659, SEEDING AND MULCHING, EXCEPT AS HEREIN MODIFIED.

ALL DISTURBED AREAS OR AREAS DESIGNATED FOR SEEDING SHALL BE GRADED AND SEEDED AND SHALL HAVE A MINIMUM OF 6" OF TOPSOIL OVER THE ENTIRE AREA. TESTING THE PH OF ANY EXISTING OR IMPORTED TOPSOIL PER ODOT 659.02 SHALL BE WAIVED. THE AREA SHALL BE HAND–RAKED AND DRESSED READY FOR SEEDING. NO STONE OVER 1" IN SIZE PERMITTED IN THE TOP 6".

SEEDING AND MULCHING SHALL BE APPLIED TO ALL AREAS OF EXPOSED SOIL.

IT'S THE CONTRACTOR'S SOLE RESPONSIBILITY TO PROVIDE THE REQUIRED GERMINATION RATES AND ENSURE THE GRASS IS ESTABLISHED TO THE SATISFACTION OF THE OWNER WHICH MAY REQUIRE WATERING, REGRADING/ADDING TOPSOIL AND RESEEDING. ANY AREAS THAT HAVE ERODED OR WHERE NEW GRASS DID NOT GERMINATE SHALL BE ADDRESSED BY THE CONTRACTOR UNTIL THE AREAS ARE STABILIZED, SHAPED, AND DRAINED, AS INDICATED IN THE PLANS.

ANY DISTURBED AREA, OUTSIDE OF THE PROJECT WORK LIMITS, CAUSED BY THE CONTRACTOR'S WORK, SHALL BE RESTORED TO THE SATISFACTION OF THE PROPERTY OWNER AND PROJECT OWNER'S REPRESENTATIVE, AT THE CONTRACTOR'S SOLE EXPENSE.

THIS ITEM INCLUDES: TOPSOIL, SEEDING, MULCHING, COMMERCIAL FERTILIZER, WATER, AND REPAIR SEEDING AND MULCHING.

THE ABOVE SHALL BE INCIDENTAL TO THE PROJECT.

App Architecture
creative focused design
615 Woodside Drive, Englewood, Ohio 45322
T 937.836.8898 F 937.832.3696
www.app-arch.com

STATE OF OHIO
ANDREW T. SHUMAN
71386
REGISTERED
PROFESSIONAL ENGINEER

MIAMI COUNTY ONE STOP CENTER
BOARD OF COMMISSIONERS FOR MIAMI COUNTY, OHIO
BARNHART ROAD, TROY, OHIO 45373

ISSUE

NO.	DATE	DESCRIPTION
1	04/08/2022	FOR CONSTRUCTION

DATE	04/08/22
JOB NO.	3923.00
DRAWN	JAC
CHECKED	ATS

COPYRIGHT © 2022 - App Architecture, Inc.

TITLE
SWPPP - EROSION CONTROL NOTES AND DETAILS

SHEET NO.
C6.2

INLET PROTECTION FOR STORM STRUCTURES W/ GRATE

INLET PROTECTION MAY CONSIST OF SEDIMENT FENCE AND/OR DEVICES SUCH AS FLEX STORM INLET FILTERS, SEDCAGE (WWW.SEDCATCH.COM), DANDY BAGS, SEDIGUARD FILTERS, OR OTHER DEVICES (ALTERNATE PRODUCTS WHOSE PERFORMANCE IS EQUAL TO OR EXCEEDS THOSE LISTED) WHICH ARE EFFECTIVE AT MINIMIZING THE AMOUNT OF SEDIMENT ENTERING THE STRUCTURE . INSTALL INLET PROTECTION ON ALL PROPOSED YARD DRAINS, CATCH BASINS AND MANHOLES WITH GRATED LIDS AND TO ALL EXISTING STORM STRUCTURES WITH GRATED LIDS WITHIN THE PROJECT AREA WHICH MAY RECEIVE RUNOFF FROM THE CONSTRUCTION SITE.

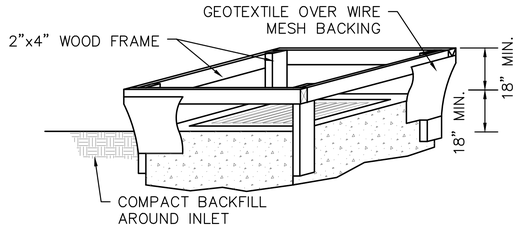

NOTES

A. INLET PROTECTION SHALL BE CONSTRUCTED EITHER BEFORE UPSLOPE LAND DISTURBANCE BEGINS OR BEFORE THE STORM DRAIN BECOMES OPERATIONAL.

B. THE EARTH AROUND THE INLET SHALL BE EXCAVATED COMPLETELY TO A DEPTH OF AT LEAST 18".

C. THE WOODEN FRAME SHALL BE CONSTRUCTED OF 2" BY 4" CONSTRUCTION GRADE LUMBER. THE 2" BY 4" POST SHALL BE DRIVEN 1' INTO THE GROUND AT FOUR CORNERS OF THE INLET AND THE TOP PORTION OF 2" BY 4" FRAME ASSEMBLED USING THE OVERLAP JOINT SHOWN. THE TOP OF THE FRAME SHALL BE AT LEAST 6" BELOW ADJACENT ROAD, IF PONDED WATER WOULD POSE A SAFETY HAZARD TO TRAFFIC.

D. WIRE MESH SHALL BE OF SUFFICIENT STRENGTH TO SUPPORT FABRIC WITH WATER FULLY IMPOUNDED AGAINST IT. IT SHALL BE STRETCHED TIGHTLY AROUND THE FRAME AND FASTENED SECURELY TO THE FRAME.

E. GEOTEXTILE SHALL HAVE AN EQUIVALENT OPENING SIZE OF 20–40 SIEVE AND BE RESISTANT TO SUNLIGHT. IT SHALL BE STRETCHED TIGHTLY AROUND THE FRAME AND FASTENED SECURELY. IT SHALL EXTEND FROM THE TOP OF THE FRAME TO 18" BELOW THE INLET NOTCH ELEVATION. THE GEOTEXTILE SHALL OVERLAY ACROSS ONE SIDE OF THE INLET SO THE ENDS OF THE CLOTH ARE NOT FASTENED TO THE SAME POST.

F. BACKFILL SHALL BE PLACED AROUND THE INLET IN COMPACTED 6" LAYERS UNTIL THE EARTH IS EVEN WITH NOTCH ELEVATION ON ENDS AND TOP ELEVATION ON SIDES.

G. A COMPACTED EARTH DIKE OR A CHECK DAM SHALL BE CONSTRUCTED IN THE DITCH LINE BELOW THE INLET IF THE INLET IS NOT IN A DEPRESSION, AND IF RUNOFF BY PASSING THE INLET WILL NOT FLOW TO A SETTING POND, THE TOP OF EARTH DIKES SHALL BE AT LEAST 6" HIGHER THAN THE TOP OF THE FRAME.

INLET PROTECTION IN SWALES, DITCH LINES OR YARD INLETS

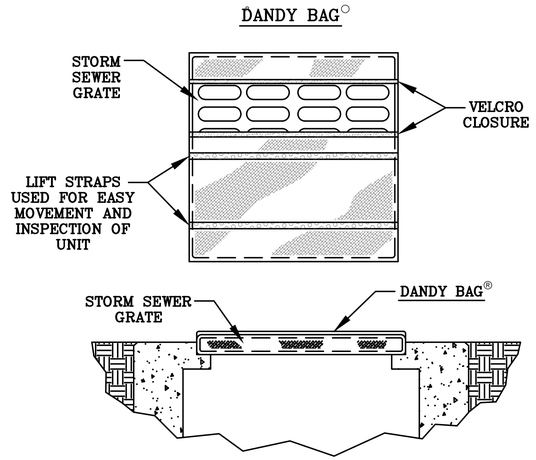

DETAIL OF INLET SEDIMENT CONTROL DEVICE

DANDY BAG®
SPECIFICATIONS

NOTE: THE DANDY BAG® WILL BE **MANUFACTURED IN THE U.S.A.** FROM A WOVEN MONOFILAMENT FABRIC THAT MEETS OR EXCEEDS THE FOLLOWING SPECIFICATIONS:

HI–FLOW DANDY BAG® (SAFETY ORANGE)

Mechanical Properties	Test Method	Units	MARV
Grab Tensile Strength	ASTM D 4632	kN (lbs)	1.62 (365) X 0.89 (200)
Grab Tensile Elongation	ASTM D 4632	%	24 X 10
Puncture Strength	ASTM D 4833	kN (lbs)	0.40 (90)
Mullen Burst Strength	ASTM D 3786	kPa (psi)	3097 (450)
Trapezoid Tear Strength	ASTM D 4533	kN (lbs)	0.51 (115) X 0.33 (75)
UV Resistence	ASTM D 4355	%	90
Apparent Opening Size	ASTM D 4751	Mm (US Std Sieve)	0.425 (40)
Flow Rate	ASTM D 4491	$1/min/m^2$ ($gal/min/ft^2$)	5907 (145)
Permittivity	ASTM D 4491	Sec^{-1}	2.1

*Note: All Dandy Bags® can be ordered with optional oil absorbent pillows

INLET PROTECTION - DANDY BAG

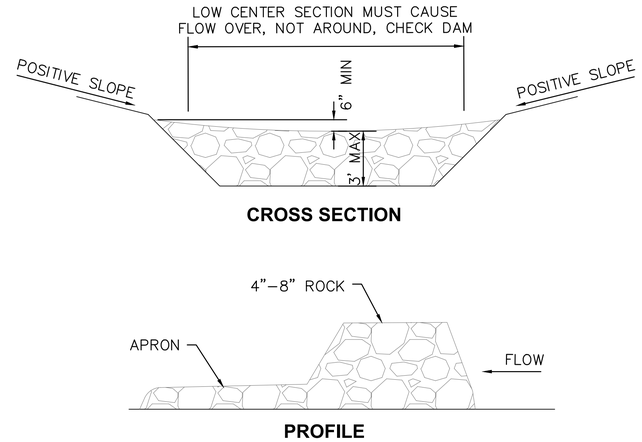

NOTES

A. THE CHECK DAM SHALL BE CONSTRUCTED OF 4–8 INCH DIAMETER STONE, PLACED SO THAT IT COMPLETELY COVERS THE WIDTH OF THE CHANNEL. ODOT TYPE D STONE IS ACCEPTABLE, BUT SHOULD BE UNDERLAIN WITH A GRAVEL FILTER CONSISTING OF ODOT No. 3 OR 4 OR SUITABLE FILTER FABRIC.

B. MAXIMUM HEIGHT OF CHECK DAM SHALL NOT EXCEED 3.0 FEET.

C. THE MIDPOINT OF THE ROCK CHECK DAM SHALL BE A MINIMUM OF 6 INCHES LOWER THAN THE SIDES IN ORDER TO DIRECT ACROSS THE CENTER AND AWAY FROM THE CHANNEL SIDES.

D. THE BASE OF THE CHECK DAM SHALL BE ENTRENCHED APPROXIMATELY 6 INCHES.

E. A STONE APRON SHALL BE CONSTRUCTED IMMEDIATELY DOWNSTREAM OF THE CHECK DAM TO PREVENT FLOWS FROM UNDERCUTTING THE STRUCTURE. THE APRON SHOULD BE 6 INCHES THICK AND ITS LENGTH TWO TIMES THE HEIGHT OF THE DAM.

F. STONE PLACEMENT SHALL BE PERFORMED EITHER BY HAND OR MECHANICALLY AS LONG AS THE CENTER OF CHECK DAM IS LOWER THAN THE SIDES AND EXTENDS ACROSS ENTIRE CHANNEL.

G. SIDE SLOPES SHALL BE A MINIMUM OF 2:1.

DITCH ROCK CHECK DAM

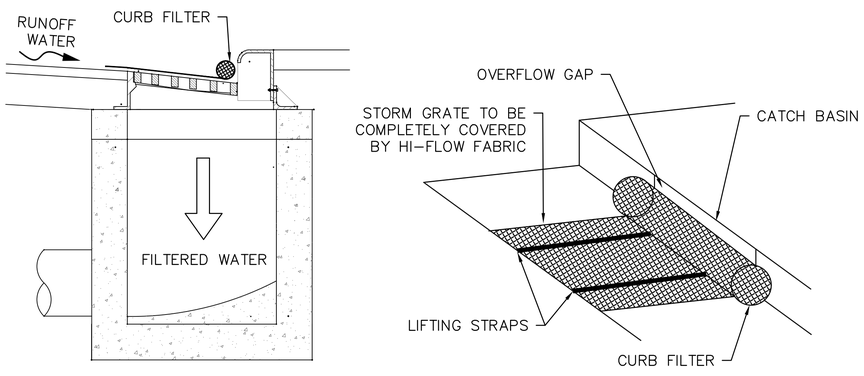

NOTES

A. DANDY CURB BAG, SEDIGUARDS, OR ALTERNATE PRODUCT WHOSE PERFORMANCE IS EQUAL TO OR EXCEEDS THOSE LISTED MAY BE USED.

B. REMOVE SEDIMENT FROM CURB INLET PROTECTION BEFORE IT HINDERS THE FILTERING CAPACITY.
- DANDY CURB BAG: LIFT GRATE AND REMOVE DANDY BAG, CLEAN ACCUMULATED SEDIMENT AND REPLACE BAG AS REQUIRED BY MANUFACTURER.
- SEDIGUARD: CLEAN SEDIGUARD ONCE IT IS DRY WITH A STIFF BROOM AFTER EVERY RAIN.
- ALTERNATE PRODUCTS: CLEAN AS REQUIRED PER MANUFACTURER'S RECCOMENDATIONS

C. INLET PROTECTION SHOULD NEVER INTERFERE WITH SAFETY OF ACTIVE TRAFFIC.

CURB INLET SEDIMENT FILTER DETAIL

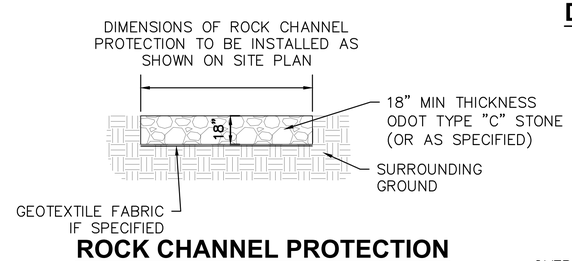

ROCK CHANNEL PROTECTION DETAIL FOR PIPE OUTLET

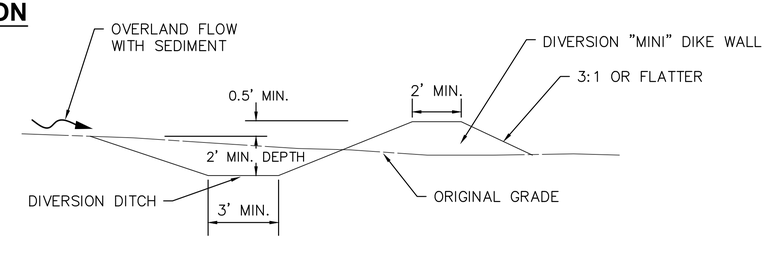

NOTES

A. BERM CAN BE CONSTRUCTED AS DITCH OR DIKE WALL

B. PLACE DITCH ON A GRADE TO DRAIN TO SEDIMENT BASIN.

CROSS SECTION OF A DIVERSION BERM

Choice One Engineering

App Architecture
creative focused design
615 Woodside Drive, Englewood, Ohio 45322
T 937.836.8898 F 937.832.3696
www.app-arch.com

STATE OF OHIO
ANDREW T. SHUMAN
71386
REGISTERED PROFESSIONAL ENGINEER

MIAMI COUNTY ONE STOP CENTER
BOARD OF COMMISSIONERS FOR MIAMI COUNTY, OHIO
BARNHART ROAD, TROY, OHIO 45373

ISSUE

NO.	DATE	DESCRIPTION
1	04/08/2022	FOR CONSTRUCTION

DATE	04/08/22
JOB NO.	3923.00
DRAWN	JAC
CHECKED	ATS

COPYRIGHT © 2022 - App Architecture, Inc.

TITLE
SWPPP - EROSION CONTROL NOTES AND DETAILS

SHEET NO.
C6.3

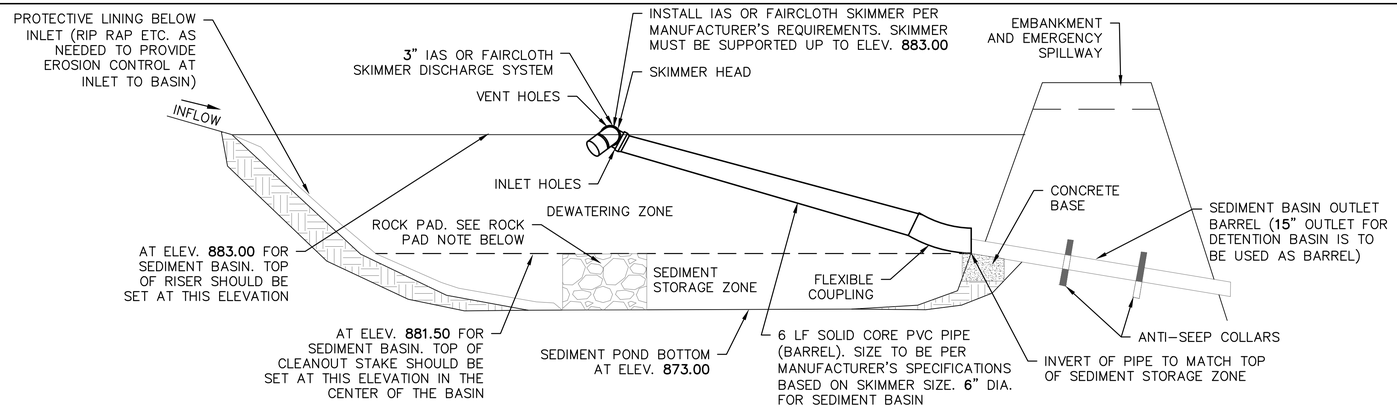

CROSS SECTION DETAIL

SEDIMENT BASIN

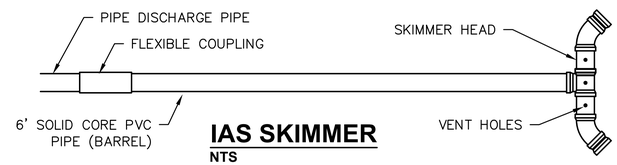

IAS SKIMMER

NTS

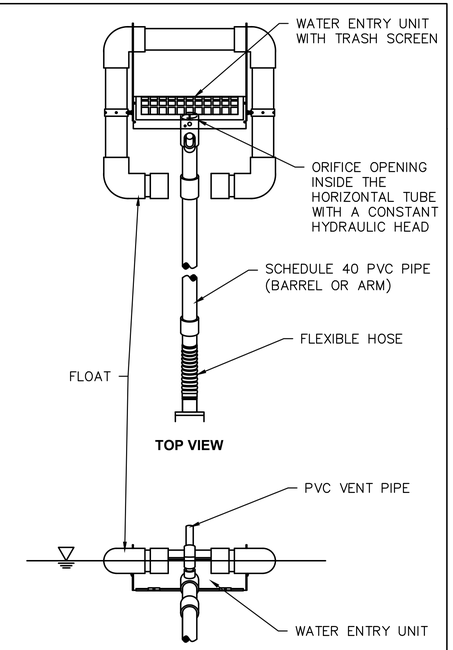

FAIRCLOTH SKIMMER

NTS

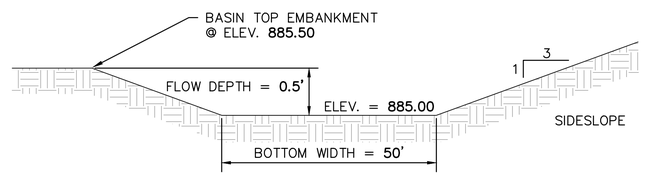

CROSS SECTION

EMERGENCY SPILLWAY

NTS

NOTES

A. SEDIMENT BASINS SHALL BE CONSTRUCTED AND OPERATIONAL BEFORE UPSLOPE LAND DISTURBANCE BEGINS.

B. SITE PREPARATION –THE AREA UNDER THE EMBANKMENT SHALL BE CLEARED, GRUBBED, AND STRIPPED OF ANY VEGETATION AND ROOT MAT. THE POOL AREA SHALL BE CLEARED AS NEEDED TO FACILITATE SEDIMENT CLEANOUT. GULLIES AND SHARP BREAKS SHALL BE SLOPED TO NO STEEPER THAN 1:1. THE SURFACE OF THE FOUNDATION AREA WILL BE THOROUGHLY SCARIFIED BEFORE PLACEMENT OF THE EMBANKMENT MATERIAL.

C. EMBANKMENT –THE FILL MATERIAL SHALL BE FREE OF ALL SOD, ROOTS, FROZEN SOIL, STONES OVER 6 IN. IN DIAMETER, AND OTHER OBJECTIONABLE MATERIAL. THE PLACING AND SPREADING OF THE FILL MATERIAL SHALL BE STARTED AT THE LOWEST POINT OF THE FOUNDATION AND THE FILL SHALL BE BROUGHT UP IN APPROXIMATELY 6 IN. HORIZONTAL LAYERS OR OF SUCH THICKNESS THAT THE REQUIRED COMPACTION CAN BE OBTAINED WITH THE EQUIPMENT USED. CONSTRUCTION EQUIPMENT SHALL BE OPERATED OVER EACH LAYER IN A WAY THAT WILL RESULT IN THE REQUIRED COMPACTION. SPECIAL EQUIPMENT SHALL BE USED WHEN THE REQUIRED COMPACTION CANNOT BE OBTAINED WITHOUT IT. THE MOISTURE CONTENT OF FILL MATERIAL SHALL BE SUCH THAT THE REQUIRED DEGREE OF COMPACTION CAN BE OBTAINED WITH THE EQUIPMENT USED. THE EMBANKMENTS OF THE SEDIMENT BASIN AND THE AREAS THAT LIE DOWNSTREAM OF THE POND MUST BE STABILIZED.

D. PIPE SPILLWAY –THE PIPE CONDUIT BARREL SHALL BE PLACED ON A FIRM FOUNDATION TO THE LINES AND GRADES SHOWN ON THE PLANS. CONNECTIONS BETWEEN THE RISER AND BARREL, THE ANTI–SEEP COLLARS AND BARREL AND ALL PIPE JOINTS SHALL BE WATERTIGHT. SELECTED BACKFILL MATERIAL SHALL BE PLACED AROUND THE CONDUIT IN LAYERS AND EACH LAYER SHALL BE COMPACTED TO AT LEAST THE SAME DENSITY AS THE ADJACENT EMBANKMENT. ALL COMPACTION WITHIN 2 FT. OF THE PIPE SPILLWAY WILL BE ACCOMPLISHED WITH HAND–OPERATED TAMPING EQUIPMENT.

E. RISER PIPE BASE –THE RISER PIPE SHALL BE SET A MINIMUM OF 6 IN. IN THE CONCRETE BASE.

F. TRASH RACKS –THE TOP OF THE RISER SHALL BE FITTED WITH TRASH RACKS FIRMLY FASTENED TO THE RISER PIPE.

G. SEED AND MULCH –THE SEDIMENT BASIN SHALL BE STABILIZED IMMEDIATELY FOLLOWING ITS CONSTRUCTION. IN NO CASE SHALL THE EMBANKMENT OR EMERGENCY SPILLWAY REMAIN BARE FOR MORE THAN 7 DAYS.

H. SEDIMENT CLEANOUT –SEDIMENT SHALL BE REMOVED AND THE SEDIMENT BASIN RESTORED TO ITS ORIGINAL DIMENSIONS WHEN SEDIMENT FILLS TO THE DESIGN DEPTH OF THE SEDIMENT STORAGE ZONE. THIS ELEVATION SHALL BE MARKED ON A CLEANOUT STAKE NEAR THE CENTER OF THE BASIN. SEDIMENT REMOVED FROM THE BASIN SHALL BE PLACED SO THAT IT WILL NOT ERODE.

I. FINAL REMOVAL – SEDIMENT BASINS SHALL BE REMOVED AFTER THE UPSTREAM DRAINAGE AREA IS STABILIZED OR AS INDICATED IN THE PLANS. DEWATERING AND REMOVAL SHALL NOT CAUSE SEDIMENT TO BE DISCHARGED. THE SEDIMENT BASIN SITE AND SEDIMENT REMOVED FROM THE BASIN SHALL BE STABILIZED.

OPERATIONS AND MAINTENANCE

SEDIMENT BASINS SHALL BE INSPECTED ON A WEEKLY BASIS AND AFTER EACH RUNOFF EVENT. NECESSARY ACTIVITIES ARE SHOWN AS FOLLOWS:

A. ESTABLISH VEGETATIVE COVER AND FERTILIZE AS NECESSARY TO MAINTAIN A VIGOROUS COVER IN AND AROUND THE SEDIMENT BASIN.

B. REMOVE UNDESIRABLE VEGETATION PERIODICALLY TO PREVENT GROWTH OF TREES AND SHRUBS ON THE EMBANKMENT AND SPILLWAY AREAS.

C. PROMPTLY REPAIR ERODED AREAS. REESTABLISH VEGETATIVE COVER IMMEDIATELY WHERE SCOUR EROSION HAS REMOVED ESTABLISHED SEEDING.

D. PROMPTLY REMOVE ANY BURROWING RODENTS THAT MAY INVADE AREAS OF THE EMBANKMENT.

E. REMOVE TRASH AND DEBRIS THAT MAY BLOCK SPILLWAYS AND ACCUMULATE IN THE POND.

F. CHECK SPILLWAY OUTLETS AND POINTS OF INFLOW TO ENSURE DRAINAGE IS NOT CAUSING EROSION AND THAT OUTLETS ARE NOT CLOGGED. REPLACE DISPLACED RIPRAP IMMEDIATELY.

ROCK PAD NOTE

IT IS VERY IMPORTANT THAT A ROCK PAD BE CONSTRUCTED TO THE HEIGHT OF THE TOP OF THE SEDIMENT STORAGE ZONE. IF THIS IS NOT DONE OR IF THE PAD IS NOT BUILT TO THE SAME HEIGHT AS THE TOP OF THE SEDIMENT STORAGE ZONE, THE SKIMMER WILL NOT FUNCTION PROPERLY .

WHEN COMPLETE THE IAS FLEXIBLE COUPLING SHOULD BE LYING FLAT ON THE ROCK PAD. THE UNIT WILL BE TOUCHING AT TWO POINTS: THE TOP OF THE BARREL/MIDDLE OF THE SKIMMER HEAD AND THE POINT AT WHICH THE BARREL IS ATTACHED TO THE IAS FLEXIBLE COUPLING. SEE MANUFACTURER'S ASSEMBLY INSTRUCTIONS.

SEDIMENT BASIN CALCULATIONS

REQUIRED SEDIMENT STORAGE VOLUME = 37 C.Y./ACRE * **8.32** ACRES = **308** C.Y.
TOP OF SEDIMENT STORAGE ZONE ELEVATION = **881.50** (**12,807** C.Y.). SET CLEANOUT STAKE AT THIS ELEVATION.
REQUIRED DEWATERING ZONE VOLUME = 67 C.Y./ACRE * **18.10** ACRES = **1,213** C.Y.
DEWATERING ZONE VOLUME (BETWEEN **883.00** AND **881.50**) = **2,957** C.Y.
TOTAL BASIN VOLUME REQUIRED TO TOP OF DEWATERING ZONE = **308** C.Y. + **1,213** C.Y. = **1,521** C.Y.
TOP OF DEWATERING ZONE ELEVATION = **883.00** (**2,957** C.Y.)
TOTAL SEDIMENT BASIN VOLUME PROVIDED TO ELEV. **883.00** = **15,764** C.Y.
RISER AND BARREL: PROPOSED **15"** DETENTION OUTLET AND **2–2B** CB ARE TO BE USED AS OUTLET FOR SEDIMENT BASIN.
EMERGENCY SPILLWAY: EMERGENCY SPILLWAY TO BE TRAPEZOIDAL WITH A BOTTOM WIDTH OF **50'**.
DEWATERING TIME : **3.21** DAYS
1,213 C.Y. * 27 = **32,751** C.F. VOLUME TO BE DEWATERED
USING A **FAIRCLOTH/IAS** WATER QUALITY SKIMMER WITH A **3"** SKIMMER SIZE, IT DISCHARGES **10,205** CF PER 24 HOURS
THEREFORE IT WILL TAKE **3.21** DAYS TO DEWATER THIS SEDIMENT BASIN.

ChoiceOne Engineering

App Architecture
creative focused design
615 Woodside Drive, Englewood, Ohio 45322
T 937.836.8898 F 937.832.3666
www.app-arch.com

STATE OF OHIO
ANDREW T. SHUMAN
71386
REGISTERED
PROFESSIONAL ENGINEER

MIAMI COUNTY ONE STOP CENTER
BOARD OF COMMISSIONERS FOR MIAMI COUNTY, OHIO
BARNHART ROAD, TROY, OHIO 45373

ISSUE

NO.	DATE	DESCRIPTION
1	04/08/2022	FOR CONSTRUCTION

DATE	04/08/22
JOB NO.	3923.00
DRAWN	JAC
CHECKED	ATS

COPYRIGHT © 2022 - App Architecture, Inc.

TITLE
SWPPP - EROSION CONTROL NOTES AND DETAILS

SHEET NO.
C6.4

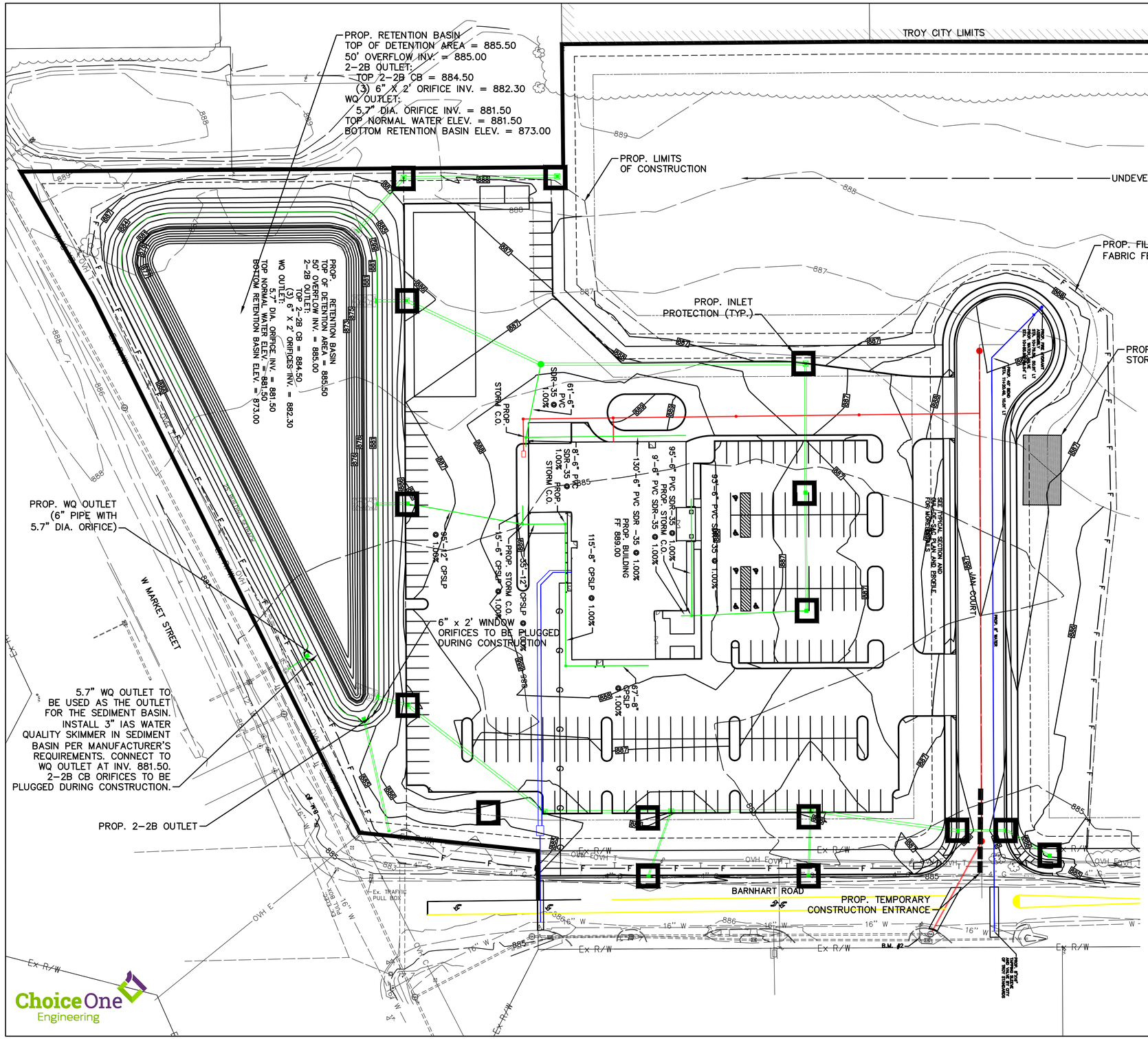

LEGEND

- EXISTING CONTOURS
- PROPOSED CONTOURS
- PROPOSED STORM SEWER
- PROPOSED CONSTRUCTION LIMITS
- PROPOSED FILTER FABRIC FENCE MEASURE
- PROPOSED INLET PROTECTION
- PROPOSED CONSTRUCTION ENTRANCE
- THIS AREA IS TO BE USED FOR VEHICLE FUELING AND MAINTENANCE. AN ABOVE GROUND STORAGE TANK OF LESS THAN 500 GALLONS WILL BE USED AS THE FUEL SOURCE. THIS AREA WILL ALSO BE USED FOR RECEIVING CONCRETE CHUTE AND OTHER CONCRETE WASH WATERS. THIS SHALL NOT OCCUR ON STREET SUBGRADE OR BASE.

SEDIMENT BASIN CALCULATIONS

SEDIMENT BASIN FOR SITE DEVELOPMENT
REQUIRED SEDIMENT BASIN VOLUME = **8.32** ACRES X **37** C.Y./AC. = **308** C.Y.
TOTAL SEDIMENT BASIN VOLUME TO ELEV. **881.50** = 12,807 C.Y.
SET TOP OF SEDIMENT BASIN RISER PIPE AT AN ELEVATION OF 867.30

WATER QUALITY AND POST CONSTRUCTION STORM WATER MANAGEMENT AND TREATMENT:

THE FIRST 0.90" OF STORMWATER RUNOFF FOR THE SITE WILL BE CONTROLLED VIA FILTRATION (AND SOME INFILTRATION) BY THE GRASSED AREAS IN AND AROUND THE PROPOSED IMPERVIOUS AREAS, GRASSED SWALES, AND GRASSED BOTTOM OF THE DETENTION BASIN. ADDITIONAL POLLUTANTS WILL ALSO SETTLE OUT OVER TIME IN THE DETENTION BASIN. THE ON-SITE DETENTION BASIN HAS BEEN DESIGNED TO TREAT THE WATER QUALITY VOLUME (WQv) USING A REDUCED SIZED ORIFICE FOR AN OUTLET AS FOLLOWS:
-RELEASE THE RUNOFF FROM A 0.90" RAIN EVENT ON THE SITE DRAINAGE AREA OVER 24 HOURS OR LONGER AND
-THE FIRST HALF OF THE TOTAL VOLUME GENERATED BY THE RUNOFF FROM A 0.90" RAIN EVENT IS RETAINED FOR GREATER THAN 16 HOURS.

POST-CONSTRUCTION STORM WATER MANAGEMENT WATER QUALITY VOLUME FOR DEVELOPMENT USING **0.90** INCHES OF RAIN:
DETENTION BASIN:
WQv=**0.73*0.90*(3.10/12)*43,560 = 33,500** CU FT
42,584 CU FT PROVIDED TO ELEV. **882.30**
THE DETENTION BASIN HAS AN OUTLET WITH A **5.7"** DIA. ORIFICE THAT RELEASES APPROX. 33% OF THE WQv AT 8 HOURS AND APPROX. 98% AT 24 HOURS

SEE SEPARATE STORMWATER CALCS. FOR ADDITIONAL DETAILS IF NEEDED

App Architecture
creative focused design
615 Woodside Drive, Englewood, Ohio 45322
T 937.836.8898 F 937.832.3666
www.app-arch.com

STATE OF OHIO
ANDREW T. SHUMAN
71386
REGISTERED
PROFESSIONAL ENGINEER

MIAMI COUNTY ONE STOP CENTER
BOARD OF COMMISSIONERS FOR MIAMI COUNTY, OHIO
BARNHART ROAD, TROY, OHIO 45373

ISSUE

NO.	DATE	DESCRIPTION
1	04/08/2022	FOR CONSTRUCTION

DATE	04/08/22
JOB NO.	3923.00
DRAWN	JAC
CHECKED	ATS

COPYRIGHT © 2022 - App Architecture, Inc.

TITLE
SWPPP - EROSION CONTROL PLAN

SHEET NO.
C6.5

Choice One Engineering

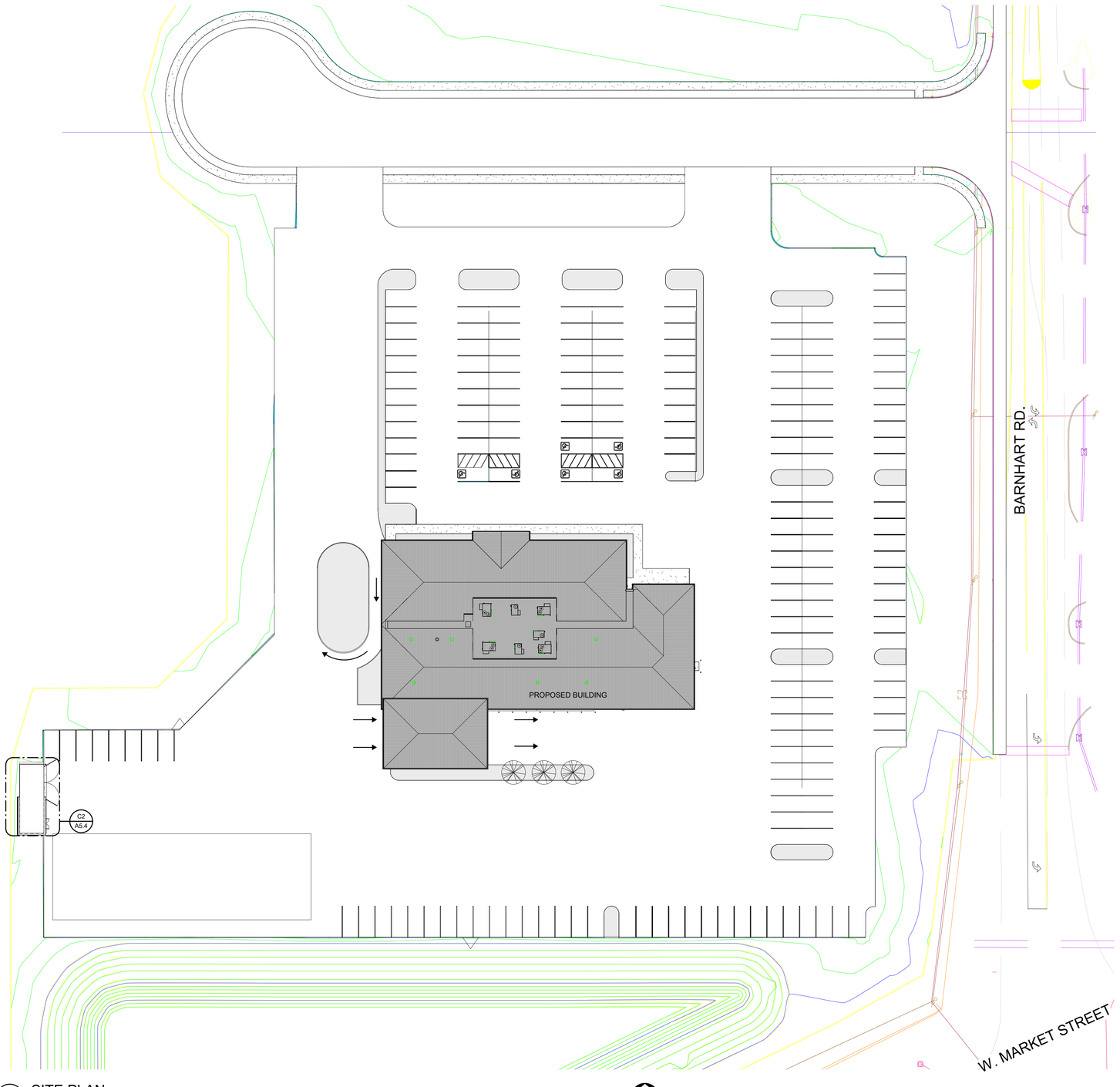

1 SITE PLAN
1/32" = 1'-0"

GENERAL NOTES

A. REFER TO CIVIL DRAWINGS FOR COMPLETE SITE INFORMATION.

B. REFER TO LANDSCAPE PLAN FOR GROUND COVERING AND PLANTING SCHEDULE.

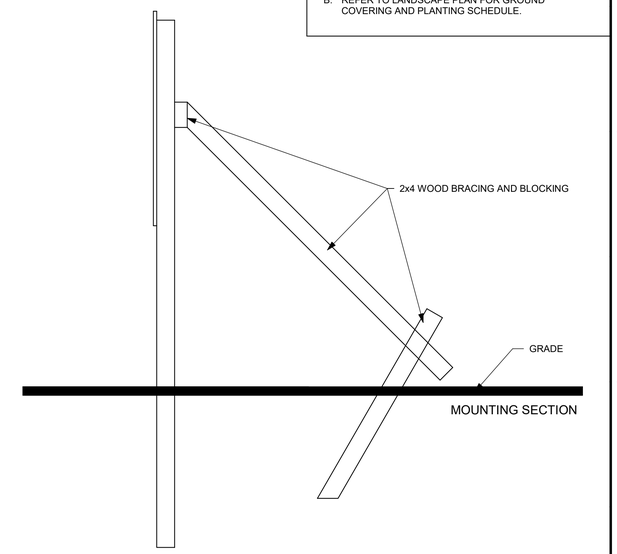

CONSTRUCTION SIGN NOTES:

A. LEFT JUSTIFY "FUTURE SITE OF:"
B. CENTER JUSTIFY "FIRE STATION No. 65", FIRE DEPARTMENT & CONGER LOGOS
C. RIGHT JUSTIFY APP ARCHITECTURE AND BEAVERCREEK TWP LOGOS UNDER FIRE STATION IMAGE. MATCH WIDTH.
D. CONGER CONSTRUCTION GROUP & APP ARCHITECTURE LOGOS TO BE SAME HEIGHT. 10" +/-.
E. FIRE DEPARTMENT LOGO SIZED TO BE 2" BELOW "FIRE STATION No: 65" & 2" ABOVE CONGER LOGO.
F. ALL LETTERS TO BE UPPER CASE VINYL
G. ALL LETTERS TO BE SOLID BLACK
H. COORDINATE LOCATION WITH OWNER
I. PAINT ALL POSTS, BRACING AND BLOCKING TO MATCH BACKGROUND COLOR
J. ALL LOGOS AND ARTWORK TO BE VINYL GRAPHICS. IMAGERY TO BE PROVIDED BY ARCHITECT.
K. SIGN TO BE REMOVED UPON CONSTRUCTION COMPLETION.

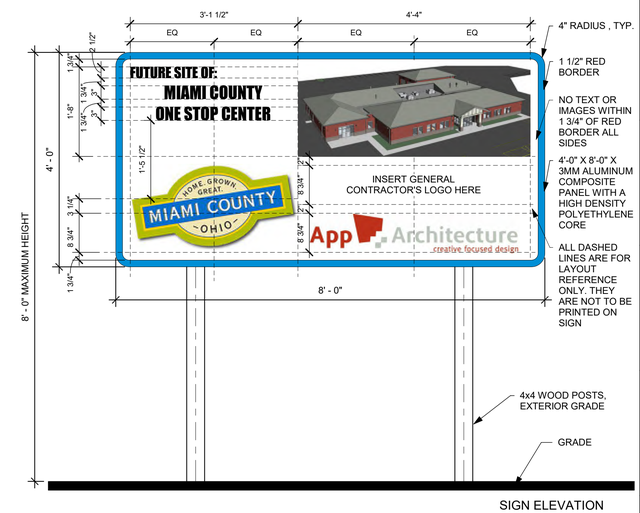

SIGN ELEVATION

2 CONSTRUCTION SIGN
3/4" = 1'-0"

App Architecture
creative focused design
615 Woodside Drive, Englewood, Ohio 45322
T 937.836.8898 F 937.832.3696
www.app-arch.com

STATE OF OHIO
TIMOTHY J. BEMENT
12305
REGISTERED ARCHITECT
Timothy J. Bement, License #12305
Expiration Date 12/31/2023

MIAMI COUNTY ONE STOP CENTER
BOARD OF COMMISSIONERS FOR MIAMI COUNTY, OHIO
BARNHART ROAD, TROY, OHIO 45373

ISSUE

NO.	DATE	DESCRIPTION
1	04/08/2022	FOR CONSTRUCTION

DATE	04/08/22
JOB NO.	3923.00
DRAWN	MLG
CHECKED	RFW/TJB

COPYRIGHT © 2022 - App Architecture, Inc.

TITLE
SITE PLAN

SHEET NO.
AC1.0

4/15/2022 8:20:01 AM

ABBREVIATIONS

SYMBOL	
@	AT
&	AND
∠	ANGLE
Ø	DIAMETER
℄	CENTER LINE
⅊	PLATE
A	
ABV	ABOVE
A/C	AIR CONDITIONING
AFF	ABOVE FINISHED FLOOR
AHU	AIR HANDLER UNIT
AL	ALUMINUM
ALT	ALTERNATE
ANOD	ANODIZED
ANCH	ANCHOR
APPROX	APPROXIMATELY
ARCH	ARCHITECT OR ARCHITECTURAL
ATTEN	ATTENUATED
AUTO	AUTOMATIC
AVG	AVERAGE
B	
BLDG	BUILDING
BLK	BLOCK
BLKG	BLOCKING
BOT	BOTTOM
BRG	BEARING
BSMT	BASEMENT
C	
CAB	CABINET
CB	CATCH BASIN
C/C	CENTER TO CENTER
CF	CUBIC FOOT
CFCI	CONTRACTOR FURNISH, CONTRACTOR INSTALL
CFOI	CONTRACTOR FURNISH, OWNER INSTALL
CG	CORNER GUARD
CJ	CONTROL JOINT
CLG	CEILING
CL	CLOSET
CLR	CLEAR
CMU	CONCRETE MASONRY UNIT
CO	CLEAN OUT
COL	COLUMN
CONC	CONCRETE
CONST	CONSTRUCTION
CONT	CONTINUOUS OR CONTINUE
CPU	CENTRAL PROCESSING UNIT (COMPUTER)
CY	CUBIC YARD
D	
DBL	DOUBLE
DEMO	DEMOLISH, DEMOLITION
DF	DRINKING FOUNTAIN
DIA	DIAMETER
DIM	DIMENSION
DISP	DISPENSER
DIV	DIVISION
DS	DOWNSPOUT
DWG	DRAWING
DTL	DETAIL
E	
EA	EACH
EC	ELECTRICAL CONTRACTOR
EIFS	EXTERIOR INSULATION AND FINISH SYSTEM
EJ	EXPANSION JOINT
ELEC	ELECTRIC OR ELECTRICAL
ELEV	ELEVATION OR ELEVATOR
EMERG	EMERGENCY
EQ	EQUAL
EQUIP	EQUIPMENT
EWC	ELECTRIC WATER COOLER
EXIST OR EX	EXISTING
EXP	EXPANSION
EXT	EXTERIOR
F	
FD	FLOOR DRAIN
FE	FIRE EXTINGUISHER
FEC	FIRE EXTINGUISHER CABINET
FF	FINISH FLOOR
FIN	FINISH OR FINISHED
FLR	FLOOR
FND	FOUNDATION
FRT	FIRE RETARDANT TREATED WOOD
FT	FOOT OR FEET OR FULLY TEMPERED
FTG	FOOTING
FUR	FURRING
FV	FIELD VERIFY
FOW	FACE OF WALL

G	
GA	GAUGE
GALV	GALVANIZED
GC	GENERAL CONTRACTOR
GD	GRADE OR GRADING
GEN	GENERAL
GL	GLASS OR GLAZING
GND	GROUND
GYP	GYPSUM
GWB	GYPSUM BOARD
GWT	GLAZED WALL TILE
H	
HB	HOSE BIBB
HDW	HARDWARE
HM	HOLLOW METAL
HORIZ	HORIZONTAL
HT	HEIGHT
HVAC	HEATING, VENTILATION & AIR CONDITIONING
HWD	HARDWARE
I	
ID	INSIDE DIAMETER
IN	INCH
INCL	INCLUDE (D) (ING)
INT	INTERIOR
INV	INVERT
J	
JB	JUNCTION BOX
JC	JANITOR CLOSET
L	
L	LONG
LAV	LAVATORY
LBS	POUNDS
LH	LEFT HAND
LL	LIVE LOAD
LLH	LONG LEG HORIZONTAL
LLV	LONG LEG VERTICAL
LTL	LINTEL
LVR	LOUVER
M	
M	MEN OR METER
MAS	MASONRY
MAT	MATERIAL
MAX	MAXIMUM
MC	MECHANICAL CONTRACTOR
MECH	MECHANICAL
MFR	MANUFACTURER
MH	MOUNTING HEIGHT, MANHOLE
MIL	THOUSANDTHS OF AN INCH
MM	MILLIMETER
MIN	MINIMUM
MISC	MISCELLANEOUS
MO	MASONRY OPENING
MTD	MOUNTED
MTL	METAL
N	
N	NORTH OR NITROGEN
NC	NURSE CALL
NIC	NOT IN CONTRACT
NO	NUMBER OR NITROUS OXIDE
NOM	NOMINAL
NRC	NOISE REDUCTION COEFFICIENT
NTS	NOT TO SCALE
O	
OD	OUTSIDE DIAMETER
OFCI	OWNER FURNISH, CONTRACTOR INSTALL
OFOI	OWNER FURNISH, OWNER INSTALL
OFVI	OWNER FURNISH, VENDOR INSTALL
OH	OVERHEAD
OHD	OVERHEAD DOOR
OPNG	OPENING
OPP	OPPOSITE
O_2	OXYGEN
P	
PAR	PARALLEL
PC	PLUMBING CONTRACTOR
PCF	POUNDS PER CUBIC FOOT
PL	PLATE OR PROPERTY LINE
PLBG	PLUMBING
PLWD	PLYWOOD
PME	PLUMBING, MECHANICAL & ELECTRICAL
PNL	PANEL
PR	PAIR
PSF	POUNDS PER SQUARE FOOT
PSI	POUNDS PER SQUARE INCH
PVC	POLYVINYL CHLORIDE

Q	
QTY	QUANTITY
R	
R	RADIUS
RA	RETURN AIR
RB	RUBBER BASE
RD	ROOF DRAIN
RECEPT	RECEPTACLE
REF	REFERENCE
REINF	REINFORCE
REQD	REQUIRED
RET	RETURN
REV	REVISION
RH	RIGHT HAND
RM	ROOM
RO	ROUGH OPENING
ROW	RIGHT OF WAY
S	
S	SOUTH
SAN	SANITARY
SB	SINK BASE
SCHED	SCHEDULE
SEAL	SEALANT
SECT	SECTION
SF	SQUARE FEET
SG	SAFETY GLASS
SH	SPRINKLER HEAD OR SHOWER HEAD
SHT	SHEET
SHTG	SHEATHING
SIM	SIMILAR
SPEC	SPECIFICATION(S)
SPK	SPEAKER
SQ	SQUARE
ST	STREET
STC	SOUND TRANSMISSION CLASSIFICATION
STD	STANDARD
STL	STEEL
STR	STRUCTURAL
SUSP	SUSPENDED
SV	SHEET VINYL
SYS	SYSTEM
T	
T & G	TONGUE & GROOVE
TB	TOWEL BAR
T&B	TOP AND BOTTOM
TEL	TELEPHONE
TOC	TOP OF CONCRETE
TOS	TOP OF STEEL
TOM	TOP OF MASONRY
TOW	TOP OF WALL
TRANS	TRANSFORMER
TV	TELEVISION
TYP	TYPICAL
U	
UC	UNDER CABINET OR COUNTER
UH	UNIT HEATER
UL	UNDERWRITERS LABORATORY
UNO	UNLESS NOTED OTHERWISE
V	
V	VACUUM
VB	VAPOR BARRIER
VCT	VINYL COMPOSITION TILE
VERT	VERTICAL
VS	VACUUM SLIDE
W	
W	WIDE OR WEST OR WOMEN
W/	WITH
W/O	WITHOUT
WC	WATER CLOSET OR WALL CABINET
WD	WOOD
WIN	WINDOW
WP	WORK POINT
WPT	WOOD PRESERVATIVE TREATMENT
WT	WEIGHT
WWF	WELDED WIRE FABRIC

REFERENCE SYMBOLS

DRAWING TITLE

A1 FIRST FLOOR PLAN
1/4" = 1' - 0"
- DRAWING TITLE
- SCALE OF DRAWING
- DRAWING REFERENCE NUMBER

INTERIOR ELEVATIONS

1 / 4 A1.1 2 / 3
- DRAWING REFERENCE NUMBER
- DRAWING SHEET NUMBER

BUILDING/DETAIL SECTION

B1 / A1.1
- DRAWING REFERENCE NUMBER
- DRAWING SHEET NUMBER

ENLARGED DETAIL

B1 / A1.1
- DRAWING REFERENCE NUMBER
- DRAWING SHEET NUMBER

EXTERIOR ELEVATIONS

1 / 4 A1.1 2 / 3
- DRAWING REFERENCE NUMBER
- DRAWING SHEET NUMBER

MATCH LINE

A1 / A1.1
- DRAWING REFERENCE NUMBER
- DRAWING SHEET NUMBER

MATERIAL SYMBOLS IN SECTION

EARTH
GRANULAR FILL
CONCRETE
CMU BLOCK
BLOCKING / SHIM
LOOSE OR BATT INSULATION
RIGID INSULATION
STEEL
PLYWOOD
BRICK
SOLID SURFACE
GYPSUM / PLASTER
WOOD, FINISHED
WOOD, DIMENSIONAL

DRAWING SYMBOLS

COLUMN CENTER LINES

A / 1

ROOM SYMBOL

ROOM NAME — ROOM NAME
101 — ROOM NUMBER

PLAN SYMBOLS

00 CONSTRUCTION NOTES
00 DEMOLITION NOTES
00 ACCESSORIES (LETTERS)
101 DOOR NUMBER SYMBOL
101 WINDOW SYMBOL
A1 WALL TYPE
00 REVISION / CHANGE
CG CORNER GUARD
EWP END WALL PROTECTOR
FEC FIRE EXTINGUISHER CABINET
TRUE NORTH
PROJECT NORTH

ELEVATION SYMBOLS

CHANGE IN ELEVATION
ELEVATION

TYPICAL WALL CONVENTIONS

EXISTING CONSTRUCTION TO BE REMOVED
EXISTING CONSTRUCTION TO REMAIN
NEW CONSTRUCTION (NEW BUILDING OR ADDITION)

REFLECTED CEILING SYMBOLS

SURFACE MOUNTED LIGHT FIXTURES
RECESSED LIGHT FIXTURES
CALL LIGHT
EXIT LIGHT
SUPPLY DIFFUSER
RETURN
S SMOKE DETECTOR
S SPEAKER
SPRINKLER HEAD
CURTAIN OR IV TRACK
9' - 6" CEILING HEIGHT

INTERIOR ELEVATION SYMBOLS

DUPLEX RECEPTACLE
TELE/DATA OUTLET
L LIGHT SWITCH
DUPLEX RECEPTACLE (EMERGENCY POWER)
N C NURSE CALL BUTTON
C B CODE BLUE BUTTON
MEDICAL GAS OUTLET
T TEMPERED GLASS
S SPANDREL GLASS

FIRE BARRIER LEGEND

SMOKE RESISTIVE
1 — 1 HR. FIRE BARRIER
1S — 1 HR. FIRE/SMOKE BARRIER
2 — 2 HR. FIRE BARRIER
2S — 2 HR. FIRE/SMOKE BARRIER
3 — 3 HR. FIRE BARRIER

ALL SYMBOLS OR ABBREVIATIONS MIGHT NOT NECESSARILY BE USED ON THIS PROJECT.
ADDITIONAL SYMBOLS OR ABBREVIATIONS MAY APPEAR ON SUBSEQUENT SHEETS.

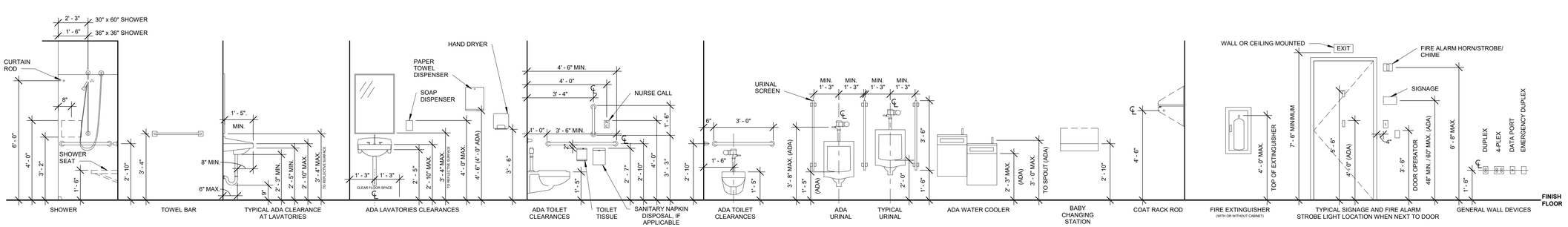

MOUNTING & CLEARANCE STANDARDS N.T.S.

(FOLLOW THESE UNLESS NOTED OTHERWISE)

App Architecture
creative focused design
615 Woodside Drive, Englewood, Ohio 45322
T 937.836.8898 F 937.832.3696
www.app-arch.com

STATE OF OHIO TIMOTHY J. BEMENT 12305 REGISTERED ARCHITECT
Timothy J. Bement, License #12305
Expiration Date 12/31/2023

MIAMI COUNTY ONE STOP CENTER
BOARD OF COMMISSIONERS FOR MIAMI COUNTY, OHIO
BARNHART ROAD, TROY, OHIO 45373

ISSUE

NO.	DATE	DESCRIPTION
1	04/08/2022	FOR CONSTRUCTION

DATE	04/08/22
JOB NO.	3923.00
DRAWN	MLG
CHECKED	RFW/TJB

COPYRIGHT © 2022 - App Architecture, Inc.

TITLE
ABBREVIATIONS AND SYMBOLS

SHEET NO.
A0.1

4/8/2022 5:03:20 PM

ROOM FINISH SCHEDULE

ROOM No.	ROOM NAME	FLOOR	BASE	WAINSCOT MAT.	WAINSCOT HT.	WALLS N	WALLS S	WALLS E	WALLS W	CEILING MAT.	CEILING HT.	REMARKS
100	ENTRY VESTIBULE	MAT-1	RB-1			P-1	P-1	P-1	P-1	GYB/P-1	9' - 7"	8
101	LOBBY	MCT-1/2	RB-1			P-1	P-1	P-1	P-1	APC-1	9' - 0"	1,6
102	MEN'S	PT-1	PTWB-1			P-1	PTW-1	P-1	P-1	GYB/P-1	8' - 0"	2,9,10
103	WOMEN'S	PT-1	PTWB-1			PTW-1	P-1	P-1	P-1	GYB/P-1	8' - 0"	2,9,10
104	CENTRAL DATA	SC	RB-1			P-1	P-1	P-1	P-1	EXPS		
105	JAN.	SC	RB-2	VWP-1	48"	P-1	VWP-1/P-1	P-1	VWP-1/P-1	EXPS	13' - 0"	3
200	WAITING	CPT-1	RB-1			P-1	P-1	P-1	P-1	APC-1	9' - 0"	7
201	WORKSTATIONS	CPT-1	RB-1			P-1	P-1	P-1	P-1	APC-1	9' - 0"	7
202	EMPLOYEE AREA	CPT-1	RB-1			P-1	P-1	P-1	P-1	APC-1	9' - 0"	7
203	OFFICE	CPT-1	RB-1			P-1	P-1	P-1	P-1	APC-1	9' - 0"	7
204	BREAK ROOM	MCT-1/2	RB-1			P-1	P-1	P-1	P-1	APC-1	9' - 0"	5,6
205	STORAGE	CPT-1 / SC	RB-1			P-1	P-1	P-1	P-1	APC-1	9' - 0"	
206	TOILET	PT-1	PTWB-1			PTW-1	P-1	P-1	P-1	APC-1	9' - 0"	2,9,10
300	PUBLIC CORRIDOR	MCT-1	RB-1			P-1	P-1	P-1	P-1	APC-1	9' - 0"	6
301	WAITING	MCT-1	RB-1			P-1	P-1	P-1	P-1	APC-1	9' - 0"	6
302	CORRIDOR	MCT-1	RB-1			P-1	P-1	P-1	P-1	APC-1	9' - 0"	6
303	ADMIN OFFICE	CPT-1	RB-1			P-1	P-1	P-1	P-1	APC-1	9' - 0"	7
304	LT. OFFICE	CPT-1	RB-1			P-1	P-1	P-1	P-1	APC-1	9' - 0"	7
305	SGT OFFICE	CPT-1	RB-1			P-1	P-1	P-1	P-1	APC-1	9' - 0"	7
306	MCES OFFICE	CPT-1	RB-1			P-1	P-1	P-1	P-1	APC-1	9' - 0"	7
307	CHANGE	MCT-1	RB-1			P-1	P-1	P-1	P-1	APC-1	9' - 0"	6
308	TLT SHOWER	PT-1	PTWB-1			PTW-1	P-1	P-1	PTW-1	APC-1 GYB/P-1	8' - 0"	2,4,9,10
309	CHANGING ROOM	MCT-1	RB-1			P-1	P-1	P-1	P-1	APC-1	9' - 0"	6
310	LCS INSPECTION	MCT-1	RB-1			P-1	P-1	P-1	P-1	APC-1	9' - 0"	8
311	COMM ROOM	SC	RB-1			P-1	P-1	P-1	P-1	EXPS	13' - 0"	
312	REPORT	CPT-1	RB-1			P-1	P-1	P-1	P-1	APC-1	9' - 0"	7
313	GUN CLOSET	MCT-1	RB-1			P-1	P-1	P-1	P-1	APC-1	9' - 0"	6
314	STAFF TLT	PT-1	PTWB-1			P-1	PTW-1	P-1	P-1	APC-1	9' - 0"	2,9,10
315	CONFERENCE ROOM	CPT-1/MCT-2	RB-1			P-1	P-1	P-1	P-1	APC-1	9' - 0"	1,6,7
316	CAR / LIGHT TRUCK DRIVE-THRU	SC	-			P-1	P-1	P-1	P-1	APC-1 GYB/P-1	18' - 7"	
317	BUS / TRUCK DRIVE-THRU	SC	-			P-1	P-1	P-1	P-1	APC-1 GYB/P-1	18' - 7"	
318	LCS STORAGE	SC	-			P-1	P-1	P-1	P-1	APC-1 GYB/P-1	10' - 0"	
400	WAITING / TESTING	CPT-1	RB-1			P-1	P-1	P-1	P-1	APC-1	9' - 0"	7
401	WORK STATIONS	CPT-1	RB-1			P-1	P-1	P-1	P-1	APC-1	9' - 0"	7
402	STORAGE	SC	RB-1			P-1	P-1	P-1	P-1	APC-1	9' - 0"	

ROOM FINISH SCHEDULE

ROOM No.	ROOM NAME	FLOOR	BASE	WAINSCOT MAT.	WAINSCOT HT.	WALLS N	WALLS S	WALLS E	WALLS W	CEILING MAT.	CEILING HT.	REMARKS
403	TOILET	PT-1	PTWB-1			P-1	P-1	PTW-1	P-1	APC-1	9' - 0"	2,9,10
404	BREAK ROOM	MCT-1/2	RB-1			P-1	P-1	P-1	P-1	APC-1	9' - 0"	5,6
500	WAITING	CPT-1	RB-1			P-1	P-1	P-1	P-1	APC-1	9' - 0"	7
501	DEALER	CPT-1	RB-1			P-1	P-1	P-1	P-1	APC-1	9' - 0"	7
502	WORK STATIONS	CPT-1/MAT-1	RB-1			P-1	P-1	P-1	P-1	APC-1	9' - 0"	1,7,8
503	RECORDS STORAGE	CPT-1	RB-1			P-1	P-1	P-1	P-1	APC-1	9' - 0"	7
504	TOILET	PT-1	PTWB-1			P-1	PTW-1	P-1	P-1	APC-1	9' - 0"	2,9,10
505	STORAGE	CPT-1 / SC	RB-1			P-1	P-1	P-1	P-1	APC-1	9' - 0"	
506	BREAK ROOM	MCT-1/2	RB-1			P-1	P-1	P-1	P-1	APC-1	9' - 0"	5,6
507	OFFICE / MEETING ROOM	CPT-1	RB-1			P-1	P-1	P-1	P-1	APC-1	9' - 0"	7
508	OFFICE	CPT-1	RB-1			P-1	P-1	P-1	P-1	APC-1	9' - 0"	7
600	VESTIBULE	MAT-1	RB-1			P-1	P-1	P-1	P-1	GYB/P-1	9' - 0"	8
601	LOBBY	CPT-1	RB-1			P-1	P-1	P-1	P-1	APC-1	9' - 0"	7
602	STORAGE	CPT-1	RB-1			P-1	P-1	P-1	P-1	APC-1	9' - 0"	7
603	CORRIDOR	CPT-1/MAT-1	RB-1			P-1	P-1	P-1	P-1	APC-1	9' - 0"	1,7,8
604	CONFERENCE ROOM	CPT-1	RB-1			P-1	P-1	P-1	P-1	APC-1	9' - 0"	7
605	RECEPTION	CPT-1	RB-1			P-1	P-1	P-1	P-1	APC-1	9' - 0"	7
606	PERMIT TECH / COPY ROOM	CPT-1	RB-1			P-1	P-1	P-1	P-1	APC-1	9' - 0"	7
607	ACCOUNT CLERK	CPT-1	RB-1			P-1	P-1	P-1	P-1	APC-1	9' - 0"	7
608	DEVELOPMENT SERVICES MANAGER	CPT-1	RB-1			P-1	P-1	P-1	P-1	APC-1	9' - 0"	7
609	DIRECTORS OFFICE	CPT-1	RB-1			P-1	P-1	P-1	P-1	APC-1	9' - 0"	7
610	BUILDING OFFICIAL	CPT-1	RB-1			P-1	P-1	P-1	P-1	APC-1	9' - 0"	7
611	INSPECTORS OFFICE	CPT-1	RB-1			P-1	P-1	P-1	P-1	APC-1	9' - 0"	7
612	PLANNER	CPT-1	RB-1			P-1	P-1	P-1	P-1	APC-1	9' - 0"	7
613	PLANNING AND ZONING MANAGER	CPT-1	RB-1			P-1	P-1	P-1	P-1	APC-1	9' - 0"	7
614	COMMON SPACE / PLAN'S STORAGE	CPT-1	RB-1			P-1	P-1	P-1	P-1	APC-1	9' - 0"	7
615	BREAK ROOM	MCT-1/2	RB-1			P-1	P-1	P-1	P-1	APC-1	9' - 0"	5,6
616	PLUMBING INSPECTORS	CPT-1	RB-1			P-1	P-1	P-1	P-1	APC-1	9' - 0"	7
617	MEN'S	PT-1	PTWB-1			P-1	P-1	PTW-1	P-1	APC-1	9' - 0"	2,9,10
618	WOMEN'S	PT-1	PTWB-1			P-1	P-1	P-1	PTW-1	APC-1	9' - 0"	2,9,10
619	CUSTODIAL STOR.	SC	RB-1			P-1	P-1	P-1	P-1	APC-1	9' - 0"	
620	OFFICE	CPT-1	RB-1			P-1	P-1	P-1	P-1	APC-1	9' - 0"	7
621	JAN.	SC	RB-2	VWP	48"	VWP-1/P-1	P-1	P-1	VWP-1/P-1	APC-1	9' - 0"	3
700	MECHANICAL AND RISER ROOM	SC	RB-1			P-1	P-1	P-1	P-1	EXPS		
701	SHED	SC	-			P-1	P-1	P-1	P-1	EXPS		

ROOM FINISH SCHEDULE REMARKS

No.	REMARK
1	REFER TO INTERIOR FINISH PLAN FOR MATERIAL CALLOUTS, LOCATIONS, AND EXTENTS.
2	ALL EXPOSED TILE EDGES AT BASE TOP AND EXTERNAL CORNERS TO BE CAPPED WITH SCHLUTER RONDEC STRIP, RONDEC-DB SATIN ANODIZED FINISHED.
3	ALL VERTICAL SEAMS IN VWP-1 TO BE BUTT SEAMED AND SEALED WITH COLOR-MATCHING SILICON CAULK. ALL TOP EDGES ARE TO BE CAPPED WITH INPRO FAUX ALUMINUM CAP STRIP.
4	TILE ABOVE PREFORMED SHOWER AREA.
5	USE A MIXED RANDOM PATTERN AS NOTED IN THIS ROOM, 40% MCT 1, 60% MCT 2.
6	ALL MCT TO BE QUARTER-TURN INSTALLED PER MFG GUIDLIENES.
7	ALL CPT-1 TO BE INSTALLED IN AN ASHLAR PATTERN, ALL PATTERN RUNNING IN THE SAME DIRECTION.
8	WALK-OFF MAT TO BE INSTALLED QUARTER-TURNED.
9	TILE TO BE INSTALLED IN 'STACKED BOND PATTERN'. FLOOR TILE TO BE INSTALLED IN SAME PATTERN, GROUT JOINTS TO BE ALIGNED.
10	PTWB-1 TO BE USED ON NON-WET WALLS. WET WALL TILE WHERE TILE MEETS FLOOR, CUT FIRST BAND OF TILE TO 6" TO ALIGN WITH TOP OF PTWB-1 BASE.

MATERIAL LEGEND

SORT MATERIAL	ITEM	MATERIAL	MANUFACTURER	MATERIAL MODEL NO.	CONTACT INFO	COLOR	FLAME / SMOKE	COMMENTS
BASE								
BASE	PTWB	PORCELAIN TILE WALL BASE	DAL-TILE	KIMONA SILK P36C9 6"x12"	VICKIE MARCH 702-517-3335	P-323 WATER CHESTNUT		
BASE	RB-1	RUBBER BASE 4"	JOHNSONITE		TRICIA ROE-KEEL 513-207-5309	167 FUDGE		
BASE	RB-2	RUBBER BASE 6"	JOHNSONITE		TRICIA ROE-KEEL 513-207-5309	167 FUDGE		
CABINETS								
CABINETS	PL-1	PLASTIC LAMINATE	WILSONART	8226	DONNA ARIAPAD 513-295-0380	DERING FOREST		
CABINETS	PL-2	PLASTIC LAMINATE	WILSONART	7850-60	DONNA ARIAPAD 513-295-0380	BEIGEWOOD		ACCENT LAMINATE BMV
CABINETS	PL-3	PLASTIC LAMINATE	WILSONART	4942-38	DONNA ARIAPAD 513-295-0380	CRISP LINEN		COUNTER TOPS AS NOTED
CABINETS	SSM-1	SOLID SURFACE	LG SOLID SURFACE	M502	MICHELLE ALLEN 513-214-9939	VAHTI		
CABINETS	SSM-2	SOLID SURFACE SINK	LG SOLID SURFACE SINK	1612	MICHELLE ALLEN 513-214-9939	ARCTIC WHITE		
CEILING								
CEILING	APC	ACOUSTIC PANEL CEILING	ARMSTRONG	686 ANGLED TEGULAR 15/16		WHITE	CLASS A	
CEILING	EXPS	EXPOSED STRUCTURE	-	-				
CEILING	GYB / P-2	GYPSUM BOARD PAINTED	SHERWIN WILLIAMS	SW7007	ANGIE JULIAN 317-714-5610	CEILING BRIGHT WHITE		
FLOOR								
FLOOR	CPT-1	CARPET TILE	MOHAWK GROUP	FIRST ONE UP II TILE -BT443	JESSICA GANIM 513-520-1730	IMPORTANCE 988	CLASS 1>450	
FLOOR	MAT-1	WALK-OFF MAT	MOHAWK GROUP	STEP UP II	JESSICA GANIM 513-520-1730	IRON ORE	CLASS 1>450	
FLOOR	MCT-1	MARMOLEUM COMPOSITE TILE	FORBO FLOORING	MCT3048	KEVIN SHORT 440-715-3327	GRAPHITE		
FLOOR	MCT-2	MARMOLEUM COMPOSITE TILE	FORBO FLOORING	MCT3235	KEVIN SHORT 440-715-3327	TOBACCO LEAF		
FLOOR	PT-1	PORCELAIN TILE	DAL-TILE	EMERGENT 12"x24" (1/8" GROUT JOINT)	VICKIE MARCH 702-517-3335	EM31 PEWTER		
FLOOR	SC	SEALED CONCRETE	-					
SPECIALTY								
SPECIALTY	CG-1	CORNER GUARD	INPRO	150 SERIES CORNER GUARD 48" TALL	LESLIE FREDRICK 513-646-21633	FEATHER	CLASS A	
SPECIALTY	EWP-1	END WALL PROTECTION	INPRO	150 SERIES ENDWALL PROTECTION 48" TALL	LESLIE FREDRICK 513-646-21633	FEATHER	CLASS A	
WALL								
WALL	P-1	PAINT	SHERWIN WILLIAMS	SW7551	ANGIE JULIAN 317-714-5610	GREEK VILLA		
WALL	P-2	PAINT	SHERWIN WILLIAMS	SW7037	ANGIE JULIAN 317-714-5610	BALANCED BEIGE		DOOR FRAME AND METAL DOOR PAINT
WALL	PTW-1	PORCELAIN TILE	DAL-TILE	KIMONA SILK 12"x24" (1/8" GROUT JOINT)	VICKIE MARCH 702-517-3335	P-323 WATER CHESTNUT		
WALL	VWP-1	VINYL WALL PROTECTION	INPRO	PALLADIUM RIGID SHEET .040	LESLIE FREDRICK 513-646-21633	FEATHER	CLASS A	

App Architecture
creative focused design
615 Woodside Drive, Englewood, Ohio 45322
T 937.836.8898 F 937.832.3696
www.app-arch.com

STATE OF OHIO
TIMOTHY J. BEMENT
12305
REGISTERED ARCHITECT
Timothy J. Bement, License #12305
Expiration Date 12/31/2023

MIAMI COUNTY ONE STOP CENTER
BOARD OF COMMISSIONERS FOR MIAMI COUNTY, OHIO
BARNHART ROAD, TROY, OHIO 45373

ISSUE

NO.	DATE	DESCRIPTION
1	04/08/2022	FOR CONSTRUCTION

DATE	04/08/22
JOB NO.	3923.00
DRAWN	MLG
CHECKED	RFW/TJB

COPYRIGHT © 2022 - App Architecture, Inc.

TITLE
FINISH SCHEDULES

SHEET NO.
A0.2

4/8/2022 5:03:21 PM

DOOR AND FRAME SCHEDULE

DOOR No.	ROOM NAME	DOOR SIZE W	DOOR SIZE H	DOOR SIZE T	DOOR MAT.	DOOR TYPE	DOOR FIN.	DOOR U/C	FRAME MAT.	FRAME TYPE	FRAME FIN.	FRAME DETAILS JAMB	FRAME DETAILS HEAD	FRAME DETAILS SILL	FIRE RTG.	HDW. SET	REMARKS
100A	ENTRY VESTIBULE	6' - 0"	7' - 0"		ALUM.	AL1	ANODIZED		ALUM				E1/A0.7	F1/A0.7		1.0	3
100B	LOBBY	6' - 0"	7' - 0"		ALUM.	AL1	ANODIZED		ALUM				E1/A0.7	F1/A0.7		6.0	3
102	MEN'S	3' - 0"	7' - 0"	1 3/4"	WD	F1	STAIN		HM	1	P	C1/A0.7	B1/A0.7		-	21.0	
103	WOMEN'S	3' - 0"	7' - 0"	1 3/4"	WD	F1	STAIN		HM	1	P	C1/A0.7	B1/A0.7		-	21.0	
104	CENTRAL DATA	3' - 0"	7' - 0"	1 3/4"	WD	F1	STAIN		HM	1	P	C1/A0.7	B1/A0.7		-	8.0	
105	JAN.	3' - 0"	7' - 0"	1 3/4"	WD	F1	STAIN		HM	1	P	C1/A0.7	B1/A0.7		-	9.0	
200	WAITING	3' - 0"	7' - 0"	1 3/4"	WD	NL2	STAIN		HM	1	P	C1/A0.7	B1/A0.7			10.0	
201	WORKSTATIONS	3' - 0"	3' - 8"	1 3/4"	PL-1	G1	-		-	-	-	-	-			24.0	1
202	EMPLOYEE AREA	3' - 0"	7' - 0"	1 3/4"	HM	NL1	P		HM	1	P	E6/A0.7	C6/A0.7			2.0	
203	OFFICE	3' - 0"	7' - 0"	1 3/4"	WD	F1	STAIN		HM	1	P	C1/A0.7	B1/A0.7		-	19.0	
204	BREAK ROOM	3' - 0"	7' - 0"	1 3/4"	WD	NL2	STAIN		HM	1	P	C1/A0.7	B1/A0.7			15.0	
205	STORAGE	3' - 0"	7' - 0"	1 3/4"	WD	F1	STAIN		HM	1	P	C1/A0.7	B1/A0.7		-	13.0	
206	TOILET	3' - 0"	7' - 0"	1 3/4"	WD	F1	STAIN		HM	1	P	C1/A0.7	B1/A0.7		-	21.0	
300	PUBLIC CORRIDOR	3' - 0"	7' - 0"	1 3/4"	WD	NL2	STAIN		HM	1	P	C1/A0.7	B1/A0.7			16.0	
301A	WAITING	3' - 0"	7' - 0"	1 3/4"	HM	NL1	P		HM	1	P	E6/A0.7	C6/A0.7			11.0	
301B	CAR / LIGHT TRUCK DRIVE-THRU	3' - 0"	7' - 0"	1 3/4"	HM	NL1	P		HM	1	P	D4/A0.7	B4/A0.7			2.0	
302A	CORRIDOR	3' - 0"	7' - 0"	1 3/4"	WD	NL2	STAIN		HM	1	P	C1/A0.7	B1/A0.7			8.0	
302B	PUBLIC CORRIDOR	3' - 0"	7' - 0"	1 3/4"	WD	NL2	STAIN		HM	1	P	C1/A0.7	B1/A0.7			7.0	
303	ADMIN OFFICE	3' - 0"	7' - 0"	1 3/4"	WD	NL2	STAIN		HM	1	P	C1/A0.7	B1/A0.7			19.0	
304A	LT. OFFICE	3' - 0"	7' - 0"	1 3/4"	WD	NL2	STAIN		HM	1	P	C1/A0.7	B1/A0.7			19.0	
304B	LT. OFFICE	3' - 0"	8' - 0"	1 1/2"	WD	B1	STAIN		HM	1	P	C1/A0.7	B1/A0.7			25.0	
305A	SGT OFFICE	3' - 0"	7' - 0"	1 3/4"	WD	NL2	STAIN		HM	1	P	C1/A0.7	B1/A0.7			19.0	
305B	SGT OFFICE	3' - 0"	8' - 0"	1 1/2"	WD	B1	STAIN		HM	1	P	C1/A0.7	B1/A0.7			25.0	
305C	SGT OFFICE	3' - 0"	8' - 0"	1 1/2"	WD	B1	STAIN		HM	1	P	C1/A0.7	B1/A0.7			25.0	
306	MCES OFFICE	3' - 0"	7' - 0"	1 3/4"	WD	NL2	STAIN		HM	1	P	C1/A0.7	B1/A0.7			19.0	
307	CHANGE	3' - 0"	7' - 0"	1 3/4"	WD	F1	STAIN		HM	1	P	C1/A0.7	B1/A0.7		-	22.0	
308	TLT SHOWER	3' - 0"	7' - 0"	1 3/4"	WD	F1	STAIN		HM	1	P	C1/A0.7	B1/A0.7		-	22.0	
309	CHANGING ROOM	3' - 0"	7' - 0"	1 3/4"	WD	F1	STAIN		HM	1	P	C1/A0.7	B1/A0.7		-	22.0	
310A	LCS INSPECTION	3' - 0"	7' - 0"	1 3/4"	WD	NL2	STAIN		HM	1	P	C1/A0.7	B1/A0.7			17.0	
310B	LCS INSPECTION	3' - 0"	7' - 0"	1 3/4"	HM	NL1	P		HM	1	P	D4/A0.7	B4/A0.7			2.0	
311	COMM ROOM	3' - 0"	7' - 0"	1 3/4"	WD	F1	STAIN		HM	1	P	C1/A0.7	B1/A0.7		-	8.0	
312	REPORT	3' - 0"	7' - 0"	1 3/4"	WD	NL2	STAIN		HM	1	P	C1/A0.7	B1/A0.7			15.0	
313	GUN CLOSET	3' - 0"	7' - 0"	1 3/4"	WD	F1	STAIN		HM	1	P	C1/A0.7	B1/A0.7		-	8.0	
314	STAFF TLT	3' - 0"	7' - 0"	1 3/4"	WD	F1	STAIN		HM	1	P	C1/A0.7	B1/A0.7		-	22.0	
315A	CONFERENCE ROOM	3' - 0"	7' - 0"	1 3/4"	WD	FG1	STAIN		HM	1	P	C1/A0.7	B1/A0.7			23.0	
315B	CONFERENCE ROOM	3' - 0"	7' - 0"	1 3/4"	WD	FG1	STAIN		HM	1	P	C1/A0.7	B1/A0.7			23.0	
317	BUS / TRUCK DRIVE-THRU	3' - 0"	7' - 0"	1 3/4"	HM	NL1	P		HM	1	P	E6/A0.7	C6/A0.7			3.0	
318A	LCS STORAGE	5' - 0"	7' - 0"	1 3/4"	HM	F1	P		HM	1	P	D4/A0.7	B4/A0.7			14.0	
318B	LCS STORAGE	5' - 0"	7' - 0"	1 3/4"	HM	F1	P		HM	1	P	D4/A0.7	B4/A0.7			14.0	
400	LOBBY	3' - 0"	7' - 0"	1 3/4"	WD	NL2	STAIN		HM	1	P	C1/A0.7	B1/A0.7			10	
401	WORK STATIONS	3' - 0"	7' - 0"	1 3/4"	WD	NL2	STAIN		HM	1	P	C1/A0.7	B1/A0.7			18.0	
402	STORAGE	3' - 0"	7' - 0"	1 3/4"	WD	F1	STAIN		HM	1	P	C1/A0.7	B1/A0.7		-	12.0	
402B	STORAGE	3' - 0"	7' - 0"	1 3/4"	HM	NL1	P		HM	1	P	E6/A0.7	C6/A0.7			2.0	
403	TOILET	3' - 0"	7' - 0"	1 3/4"	WD	F1	STAIN		HM	1	P	C1/A0.7	B1/A0.7		-	22.0	
404	BREAK ROOM	3' - 0"	7' - 0"	1 3/4"	WD	NL2	STAIN		HM	1	P	C1/A0.7	B1/A0.7			15.0	
500	WAITING	3' - 0"	7' - 0"	1 3/4"	WD	NL2	STAIN		HM	1	P	C1/A0.7	B1/A0.7			10.0	
501	DEALER	3' - 0"	7' - 0"	1 3/4"	WD	NL2	STAIN		HM	1	P	C1/A0.7	B1/A0.7			17.0	
502	WORK STATIONS	3' - 0"	7' - 0"	1 3/4"	HM	NL1	P		HM	1	P	E6/A0.7	C6/A0.7			2.0	
504	TOILET	3' - 0"	7' - 0"	1 3/4"	WD	F1	STAIN		HM	1	P	C1/A0.7	B1/A0.7		-	22.0	
505	STORAGE	3' - 0"	7' - 0"	1 3/4"	WD	F1	STAIN		HM	1	P	C1/A0.7	B1/A0.7		-	13.0	
506	BREAK ROOM	3' - 0"	7' - 0"	1 3/4"	WD	NL2	STAIN		HM	1	P	C1/A0.7	B1/A0.7			15.0	
507	OFFICE / MEETING ROOM	3' - 0"	7' - 0"	1 3/4"	WD	F1	STAIN		HM	1	P	C1/A0.7	B1/A0.7		-	19.0	
508	OFFICE	3' - 0"	7' - 0"	1 3/4"	WD	F1	STAIN		HM	1	P	C1/A0.7	B1/A0.7		-	19.0	
600	VESTIBULE	6' - 0"	7' - 0"		ALUM.	AL1	ANODIZED		ALUM				E1/A0.7	F1/A0.7		1.0	3
601	LOBBY	6' - 0"	7' - 0"		ALUM.	AL1	ANODIZED		ALUM				E1/A0.7	F1/A0.7		6.0	3
602	STORAGE	3' - 0"	7' - 0"	1 3/4"	WD	F1	STAIN		HM	1	P	C1/A0.7	B1/A0.7		-	13.0	
603A	CORRIDOR	3' - 0"	7' - 0"	1 3/4"	WD	F1	STAIN		HM	1	P	C1/A0.7	B1/A0.7		-	17.0	
603B	CORRIDOR	3' - 0"	7' - 0"	1 3/4"	HM	NL1	P		HM	1	P	E6/A0.7	C6/A0.7			2.0	
604	CONFERENCE ROOM	3' - 0"	7' - 0"	1 3/4"	WD	FG1	STAIN		HM	1	P	C1/A0.7	B1/A0.7			23.0	
608	DEVELOPMENT SERVICES MANAGER	3' - 0"	7' - 0"	1 3/4"	WD	NL2	STAIN		HM	1	P	C1/A0.7	B1/A0.7			19.0	
609	DIRECTORS OFFICE	3' - 0"	7' - 0"	1 3/4"	WD	NL2	STAIN		HM	1	P	C1/A0.7	B1/A0.7			19.0	
610	BUILDING OFFICIAL	3' - 0"	7' - 0"	1 3/4"	WD	NL2	STAIN		HM	1	P	C1/A0.7	B1/A0.7			19.0	
611	INSPECTORS OFFICE	3' - 0"	7' - 0"	1 3/4"	HM	NL1	P		HM	1	P	E6/A0.7	C6/A0.7			2.0	
611A	INSPECTORS OFFICE	3' - 0"	7' - 0"	1 3/4"	WD	NL2	STAIN		HM	1	P	C1/A0.7	B1/A0.7			18.0	
612	PLANNER	3' - 0"	7' - 0"	1 3/4"	WD	NL2	STAIN		HM	1	P	C1/A0.7	B1/A0.7			19.0	
613	PLANNING AND ZONING MANAGER	3' - 0"	7' - 0"	1 3/4"	WD	NL2	STAIN		HM	1	P	C1/A0.7	B1/A0.7			19.0	
614	COMMON SPACE / PLAN'S STORAGE	3' - 0"	7' - 0"	1 3/4"	WD	NL2	STAIN		HM	1	P	C1/A0.7	B1/A0.7			15.0	
615	BREAK ROOM	3' - 0"	7' - 0"	1 3/4"	WD	NL2	STAIN		HM	1	P	C1/A0.7	B1/A0.7			15.0	
617	MEN'S	3' - 0"	7' - 0"	1 3/4"	WD	F1	STAIN		HM	1	P	C1/A0.7	B1/A0.7		-	22.0	
618	WOMEN'S	3' - 0"	7' - 0"	1 3/4"	WD	F1	STAIN		HM	1	P	C1/A0.7	B1/A0.7		-	22.0	
619	CUSTODIAL STOR.	3' - 0"	7' - 0"	1 3/4"	WD	F1	STAIN		HM	1	P	C1/A0.7	B1/A0.7		-	13.0	
620	OFFICE	3' - 0"	7' - 0"	1 3/4"	WD	NL2	STAIN		HM	1	P	C1/A0.7	B1/A0.7			19.0	
621	JAN.	3' - 0"	7' - 0"	1 3/4"	WD	F1	STAIN		HM	1	P	C1/A0.7	B1/A0.7		-	9.0	
700	MECHANICAL AND RISER ROOM	3' - 0"	7' - 0"	1 3/4"	HM	F2	P		HM	1	P	E6/A0.7	C6/A0.7		-	2.0	
701	SHED	6' - 0"	7' - 0"	1 3/4"	HM	F2	P		HM	1	P	E6/A0.7	C6/A0.7		-	4.0	
OH1	CAR / LIGHT TRUCK DRIVE-THRU	12' - 0"	14' - 0"	2"	ALUM	OH1	PWDR COATED		ALUM			B1/A0.10	C5/A0.10	F5/A0.10		26.0	2
OH2	BUS / TRUCK DRIVE-THRU	12' - 0"	14' - 0"	2"	ALUM	OH1	PWDR COATED		ALUM			B1/A0.10	C5/A0.10	F5/A0.10		26.0	2
OH3	CAR / LIGHT TRUCK DRIVE-THRU	12' - 0"	14' - 0"	2"	ALUM	OH1	PWDR COATED		ALUM			B1/A0.10	C5/A0.10	F5/A0.10		26.0	2
OH4	BUS / TRUCK DRIVE-THRU	12' - 0"	14' - 0"	2"	ALUM	OH1	PWDR COATED		ALUM			B1/A0.10	C5/A0.10	F5/A0.10		26.0	2

DOOR REMARKS

No.	REMARK
1	GATE DOOR BY CASEWORK MANUFACTURER.
2	HEIGHT AND WIDTH DIMENSIONS ARE FOR OPENING. REFER TO DOOR ELEVATIONS FOR ACTUAL DOOR SIZES.
3	REFER TO STOREFRONT AND WINDOW SCHEDULE FOR MORE DETAILS.

SIGNAGE LEGEND

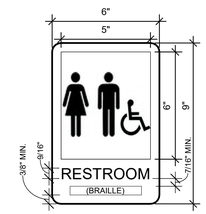

UNISEX RESTROOM - TYPE 1

3" = 1'-0"

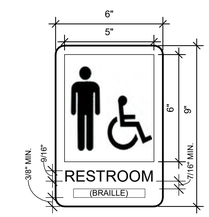

MEN'S RESTROOM - TYPE 2

3" = 1'-0"

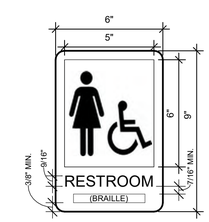

WOMEN'S RESTROOM - TYPE 3

3" = 1'-0"

SIGN NOTES

A. ALL SIGNS SHALL HAVE BRAILLE LETTERING BENEATH TEXT, TYPICAL.

B. SIGNS MOUNTED ON GLASS AT DOOR NEED TO BE MOUNTED WITH ADHESIVE AND MATCHING BACKER PLATE FOR OTHER SIDE OF GLASS.

C. TEXT AND GRAPHICS TO BE NON-GLARE COLOR IN HIGH CONTRAST WITH BACKGROUND. SELECTED BY ARCHITECT FROM MANUFACTURER'S STANDARD COLORS.

D. BACKGROUND TO BE NON-GLARE COLOR IN HIGH CONTRAST WITH TEXT AND GRAPHICS. SELECTED BY ARCHITECT FROM MANUFACTURER'S STANDARD COLORS.

E. 1/2" RADIUS CORNERS.

F. ALL TEXT ON SIGNS LOCATED NEXT TO INTERIOR DOORS WILL BE 1/32" RAISED CHARACTERS, UPPERCASE, AND VIEWABLE AT LESS THAN 6 FEET.

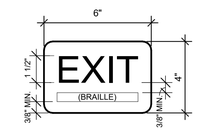

EXIT SIGN - TYPE 4

3" = 1'-0"

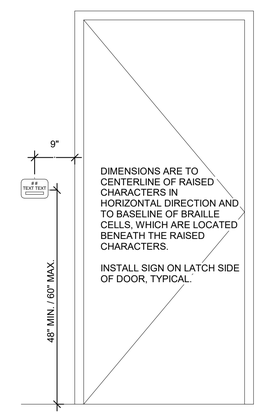

SIGNAGE LOCATION

3/4" = 1'-0"

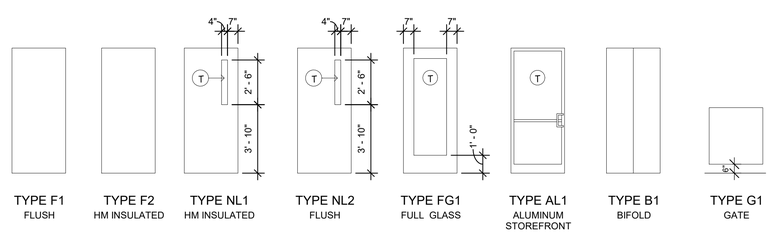

TYPE F1 FLUSH | TYPE F2 HM INSULATED | TYPE NL1 HM INSULATED | TYPE NL2 FLUSH | TYPE FG1 FULL GLASS | TYPE AL1 ALUMINUM STOREFRONT | TYPE B1 BIFOLD | TYPE G1 GATE

(T) INDICATES TEMPERED SAFETY GLAZING

DOOR ELEVATIONS

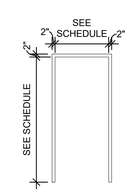

TYPE 1

SINGLE / PAIR STANDARD

FRAME ELEVATIONS

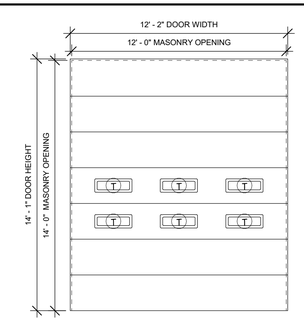

TYPE OH1

APPARATUS BAY DOOR ELEVATION

App Architecture
creative focused design
615 Woodside Drive, Englewood, Ohio 45322
T 937.836.8898 F 937.832.3696
www.app-arch.com

STATE OF OHIO TIMOTHY J. BEMENT 12305 REGISTERED ARCHITECT
Timothy J. Bement, License #12305
Expiration Date 12/31/2023

MIAMI COUNTY ONE STOP CENTER
BOARD OF COMMISSIONERS FOR MIAMI COUNTY, OHIO
BARNHART ROAD, TROY, OHIO 45373

ISSUE

NO.	DATE	DESCRIPTION
1	04/08/2022	FOR CONSTRUCTION

DATE	04/08/22
JOB NO.	3923.00
DRAWN	MLG
CHECKED	RFW/TJB

COPYRIGHT © 2022 - App Architecture, Inc.

TITLE
DOOR SCHEDULES

SHEET NO.
A0.3

4/8/2022 5:03:22 PM

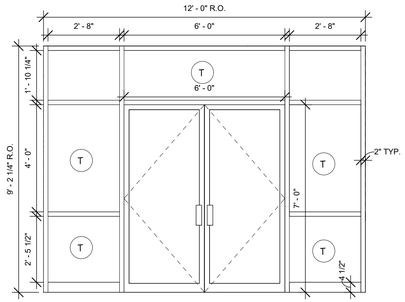

B1 SF1 ELEVATION
3/8" = 1'-0"

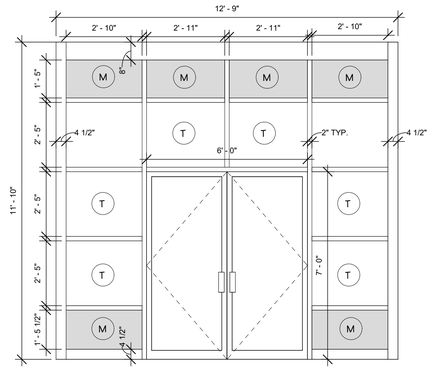

B2 SF2 ELEVATION
3/8" = 1'-0"

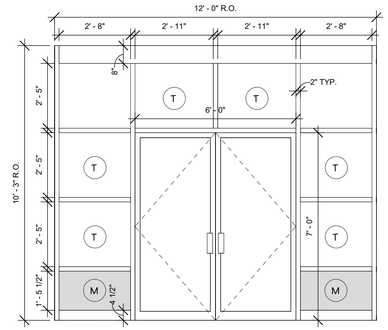

B4 SF3 ELEVATION
3/8" = 1'-0"

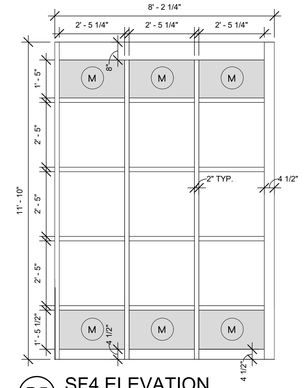

B5 SF4 ELEVATION
3/8" = 1'-0"

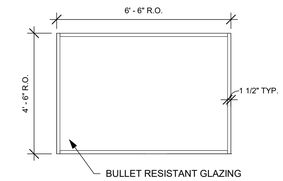

B6 SF5 ELEVATION
3/8" = 1'-0"

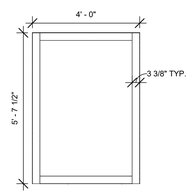

C1 W1 ELEVATION
3/8" = 1'-0"

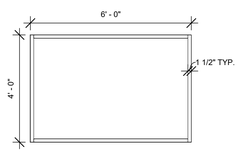

C2 W2 ELEVATION
3/8" = 1'-0"

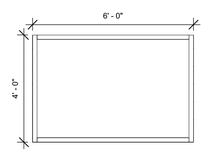

C3 W3 ELEVATION
3/8" = 1'-0"

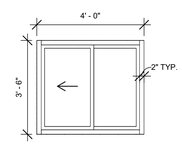

C4 W4 ELEVATION
3/8" = 1'-0"

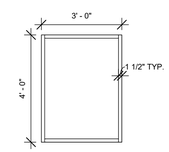

C5 W5 ELEVATION
3/8" = 1'-0"

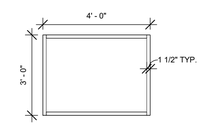

C6 W6 ELEVATION
3/8" = 1'-0"

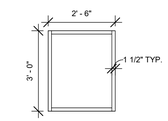

C7 W7 ELEVATION
3/8" = 1'-0"

T INDICATES TEMEPERED GLAZING

M INDICATES METAL PANEL

WINDOW SCHEDULE

TYPE	QUANTITY	ROUGH OPENING WIDTH	ROUGH OPENING HEIGHT	MATERIAL	JAMB	HEAD	SILL	HEAD HEIGHT	COMMENTS
	2								
SF1	2	12' - 0"	9' - 2 1/4"	ALUM.	F6/A0.8	B4/A0.8	F2/A0.7	9' - 2 1/4"	
SF2	1	12' - 4 1/2"	11' - 10"	ALUM.	-	B1/A0.8	F2/A0.7	11' - 10"	1
SF3	1	12' - 0"	10' - 3"	ALUM.	F4/A0.8	B6/A0.8	F2/A0.7	10' - 3"	
SF4	2	8' - 0"	11' - 10"	ALUM.	F4/A0.8	B1/A0.8	F2/A0.7	11' - 10"	1
SF5	4	6' - 6"	4' - 6"	ALUM.	F1/A0.8	C1/A0.8	D1/A0.8	7' - 10 1/2"	
W1	21	4' - 0"	5' - 7 1/2"	ALUM.	F5/A0.9	B5/A0.9	D5/A0.9	8' - 7 1/2"	
W2	4	6' - 0"	4' - 0"	ALUM.	F3/A0.9	B3/A0.9	D3/A0.9	6' - 6"	
W3	1	6' - 0"	4' - 0"	ALUM.	F3/A0.9	B3/A0.9	D3/A0.9	6' - 6"	
W4	1	4' - 0"	3' - 6"	ALUM.	F6/A0.8	B6/A0.8	D6/A0.8	6' - 8"	
W5	3	3' - 0"	4' - 0"	ALUM.	F3/A0.9	B3/A0.9	D3/A0.9	6' - 6"	
W6	1	4' - 0"	3' - 0"	ALUM.	F3/A0.9	B3/A0.9	D3/A0.9	6' - 6"	2
W7	2	2' - 6"	3' - 0"	ALUM.	F3/A0.9	B3/A0.9	D3/A0.9	5' - 6"	

WINDOW REMARKS

1	4 1/2" CORNER STOREFRONT MULLIONS AT JAMB INTERSECTING WITH OTHER STOREFRONT SEGEMENTS.
2	1 WAY VIEWING GLASS

App Architecture
creative focused design
615 Woodside Drive, Englewood, Ohio 45322
T 937.836.8898 F 937.832.3696
www.app-arch.com

STATE OF OHIO
TIMOTHY J. BEMENT
12305
REGISTERED ARCHITECT
Timothy J. Bement, License #12305
Expiration Date 12/31/2023

MIAMI COUNTY ONE STOP CENTER
BOARD OF COMMISSIONERS FOR MIAMI COUNTY, OHIO
BARNHART ROAD, TROY, OHIO 45373

ISSUE

NO.	DATE	DESCRIPTION
1	04/08/2022	FOR CONSTRUCTION

DATE	04/08/22
JOB NO.	3923.00
DRAWN	MLG
CHECKED	RFW/TJB

COPYRIGHT © 2022 - App Architecture, Inc.

TITLE
WINDOW SCHEDULES

SHEET NO.
A0.4

4/8/2022 5:03:24 PM

INTERIOR WALL TYPES SCHEDULE

TYPE	BASE WALL WIDTH	FIRE RATING / TESTING AGENCY, ASSEMBLY NO.	DETAILS & NOTES
A1	3 5/8"	- -	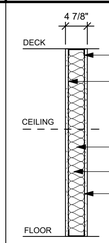 SLIP- HEAD CONNECTION AT HEAD 5/8" TYPE "X" GYPSUM BOARD 3 5/8" - 20 GA. STEEL STUDS @ 16" O.C. 3 1/2" SOUND ATTENUATION 5/8" TYPE "X" GYPSUM BOARD NOTES: 5/8" CEMENTITIOUS BACKER UNITS TO FULL HEIGHT OF WALL TILE.
A2	3 5/8"		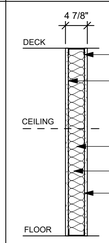 SLIP- HEAD CONNECTION AT HEAD 5/8" HIGH ABUSE RESISTANT GYPSUM BOARD 3 5/8" - 20 GA. STEEL STUDS @ 16" O.C. 3 1/2" SOUND ATTENUATION 5/8" HIGH ABUSE RESISTANT GYPSUM BOARD NOTES: 5/8" CEMENTITIOUS BACKER UNITS TO FULL HEIGHT OF WALL TILE.
A3	3 5/8"		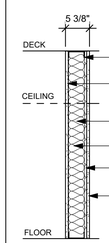 SLIP- HEAD CONNECTION AT HEAD 5/8" TYPE "X" GYPSUM BOARD 3 5/8" - 20 GA. STEEL STUDS @ 16" O.C. 3 1/2" SOUND ATTENUATION 1/2" BULLET RESISTANT FIBERGLASS SHEET 5/8" TYPE "X" GYPSUM BOARD NOTES: 5/8" CEMENTITIOUS BACKER UNITS TO FULL HEIGHT OF WALL TILE.

INTERIOR WALL TYPES SCHEDULE

TYPE	BASE WALL WIDTH	FIRE RATING / TESTING AGENCY, ASSEMBLY NO.	DETAILS & NOTES
M1	7 5/8"		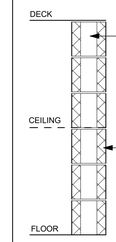 CONCRETE BLOCK EXTEND TO STRUCTURE ABOVE 8" NOMINAL EXTEND TO STRUCTURE ABOVE
B1	6"	- -	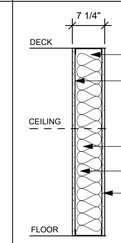 SLIP- HEAD CONNECTION AT HEAD 5/8" TYPE "X" GYPSUM BOARD 6" - 20 GA. STEEL STUDS @ 16" O.C. 5 1/2" SOUND ATTENUATION 5/8" TYPE "X" GYPSUM BOARD
E1	3 5/8"	- -	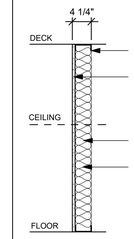 SLIP- HEAD CONNECTION AT HEAD 5/8" TYPE "X" GYPSUM BOARD 3 5/8" - 20 GA. STEEL STUDS @ 16" O.C. 3 1/2" SOUND ATTENUATION NOTES: 5/8" CEMENTITIOUS BACKER UNITS TO FULL HEIGHT OF WALL TILE.

GENERAL NOTES

A. MOISTURE/MOLD RESISTANT GYPSUM BOARD SHALL BE USED BEHIND ALL SINKS, SERVICE SINKS AND SHOWER AREAS. EXTEND MINIMUM 24" BEYOND PLUMBING FIXTURES.

B. PROVIDE & INSTALL DEFLECTION TRACK AT ALL INTERIOR WALLS THAT EXTEND TO DECK.

C. STEEL STUD PARTITIONS SHALL BE BRACED TO STRUCTURE ABOVE.

D. REFER TO FLOOR PLANS FOR LOCATIONS OF INTERIOR PARTITION TYPES.

E. REFER TO SHEET A0.7 FOR TYPICAL INTERIOR PARTITIONS DETAILS.

F. ALL PARTITIONS TO SCHEDULED TO RECEIVE TILE SHALL HAVE CEMENTITIOUS BACKER UNIT TO FULL HEIGHT OF WALL TILE.

G. AT ALL SOUND CONTROL TYPE PARTITIONS, APPLY ACOUSTICAL SEALANT AROUND ELECTRICAL RECEPTACLES, PIPES AND & DUCT PENETRATIONS.

H. AT ALL ACOUSTICAL PARTITIONS / SOUND CONTROL TYPE PARTITIONS APPLY ACOUSTICAL SEALANT AT PERIMETER OF PARTITION AND AROUND ELECTRICAL RECEPTACLES, PIPES AND & DUCT PENETRATIONS.

App Architecture
creative focused design
615 Woodside Drive, Englewood, Ohio 45322
T 937.836.8898 F 937.832.3696
www.app-arch.com

STATE OF OHIO
TIMOTHY J. BEMENT
12305
REGISTERED ARCHITECT
Timothy J. Bement, License #12305
Expiration Date 12/31/2023

MIAMI COUNTY ONE STOP CENTER
BOARD OF COMMISSIONERS FOR MIAMI COUNTY, OHIO
BARNHART ROAD, TROY, OHIO 45373

ISSUE

NO.	DATE	DESCRIPTION
1	04/08/2022	FOR CONSTRUCTION

DATE	04/08/22
JOB NO.	3923.00
DRAWN	MLG
CHECKED	RFW/TJB

COPYRIGHT © 2022 - App Architecture, Inc.

TITLE
WALL TYPES

SHEET NO.
A0.5

4/8/2022 5:03:25 PM

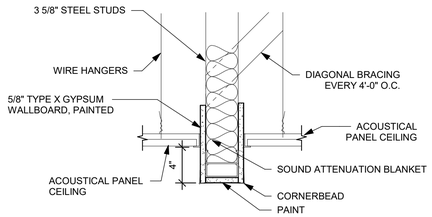

B1 BULKHEAD DETAIL
1 1/2" = 1'-0"

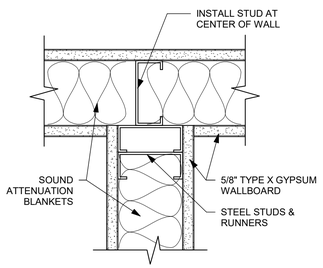

C1 WALL PARTITION DETAIL
3" = 1'-0"

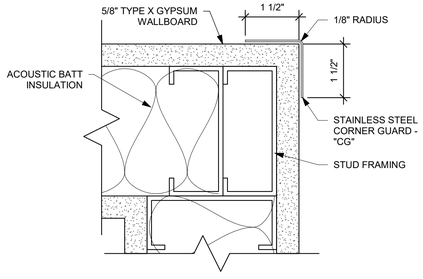

E1 CG-1 CORNER GUARD
6" = 1'-0"

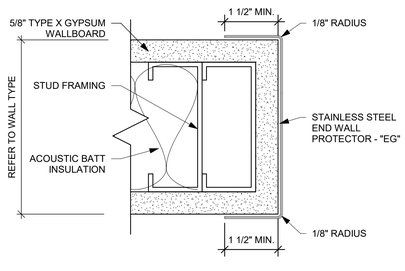

F1 EG - END WALL PROTECTOR
6" = 1'-0"

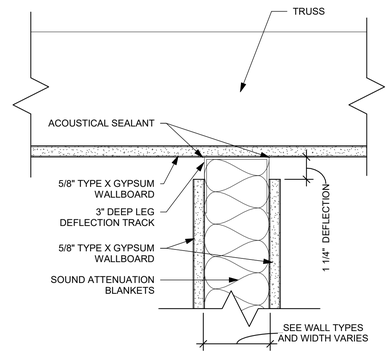

B3 TYPICAL DEFLECTION TRACK DETAIL (NON RATED)
3" = 1'-0"

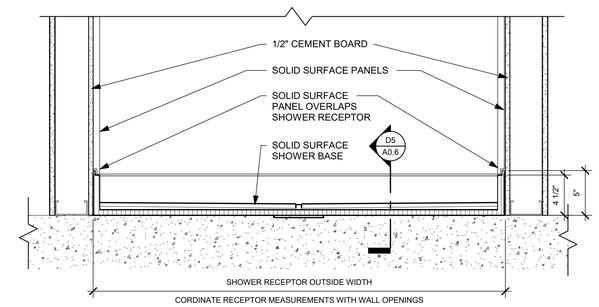

B5 TYP. SHOWER RECEPTOR DETAIL
1 1/2" = 1'-0"

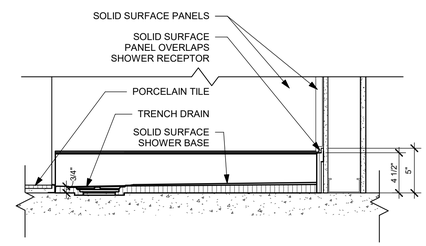

D5 TYP. SHOWER RECEPTOR SECTION
1 1/2" = 1'-0"

App Architecture
creative focused design
615 Woodside Drive, Englewood, Ohio 45322
T 937.836.8898 F 937.832.3696
www.app-arch.com

STATE OF OHIO
TIMOTHY J. BEMENT
12305
REGISTERED ARCHITECT
Timothy J. Bement, License #12305
Expiration Date 12/31/2023

MIAMI COUNTY ONE STOP CENTER
BOARD OF COMMISSIONERS FOR MIAMI COUNTY, OHIO
BARNHART ROAD, TROY, OHIO 45373

ISSUE

NO.	DATE	DESCRIPTION
1	04/08/2022	FOR CONSTRUCTION

DATE	04/08/22
JOB NO.	3923.00
DRAWN	MLG
CHECKED	RFW/TJB

COPYRIGHT © 2022 - App Architecture, Inc.

TITLE
INTERIOR DETAILS

SHEET NO.
A0.6

4/8/2022 5:03:25 PM

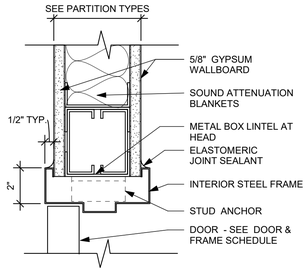

B1 HEAD DETAIL
3" = 1'-0"

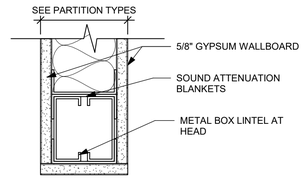

B2 TYP. HEAD DETAIL - WALL OPENING
3" = 1'-0"

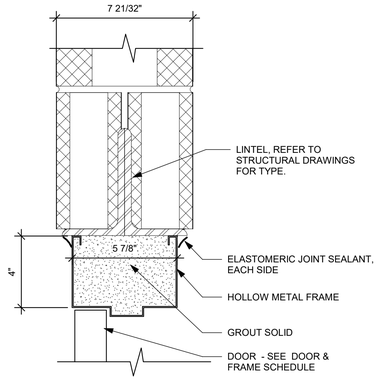

B4 HEAD DETAIL - MASONRY
3" = 1'-0"

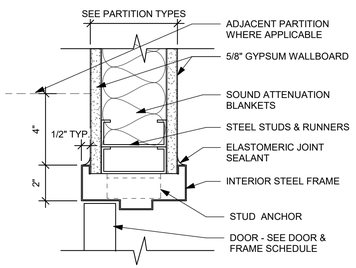

C1 JAMB DETAIL
3" = 1'-0"

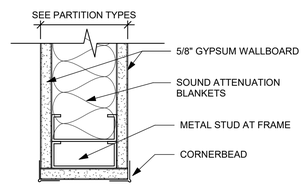

C2 TYP. JAMB DETAIL - WALL OPENING
3" = 1'-0"

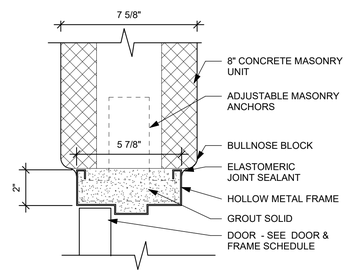

D4 JAMB DETAIL - MASONRY
3" = 1'-0"

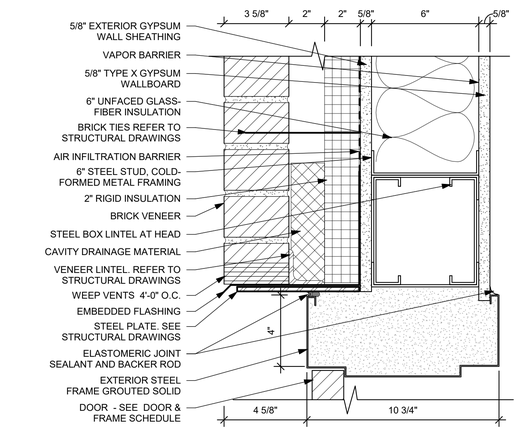

C6 HEAD DETAIL - METAL STUD
3" = 1'-0"

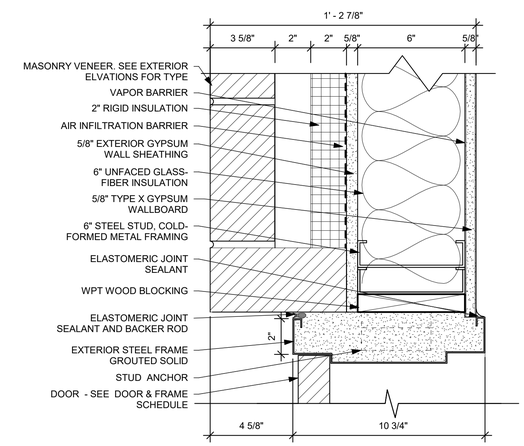

E6 JAMB DETAIL - METAL STUD
3" = 1'-0"

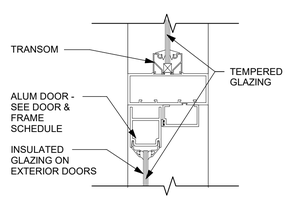

E1 HEAD DETAIL - STOREFRONT
3" = 1'-0"

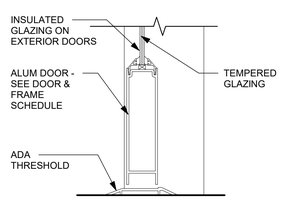

F1 SILL DETAIL - STOREFRONT
3" = 1'-0"

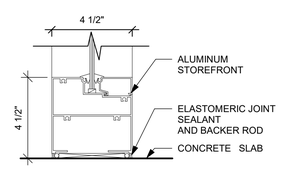

F2 SILL DETAIL - STOREFRONT
3" = 1'-0"

App Architecture
creative focused design
615 Woodside Drive, Englewood, Ohio 45322
T 937.836.8898 F 937.832.3696
www.app-arch.com

STATE OF OHIO
TIMOTHY J. BEMENT
12305
REGISTERED ARCHITECT
Timothy J. Bement, License #12305
Expiration Date 12/31/2023

MIAMI COUNTY ONE STOP CENTER
BOARD OF COMMISSIONERS FOR MIAMI COUNTY, OHIO
BARNHART ROAD, TROY, OHIO 45373

ISSUE

NO.	DATE	DESCRIPTION
1	04/08/2022	FOR CONSTRUCTION

DATE	04/08/22
JOB NO.	3923.00
DRAWN	MLG
CHECKED	RFW/TJB

COPYRIGHT © 2022 - App Architecture, Inc.

TITLE
DOOR AND WINDOW DETAILS

SHEET NO.
A0.7

4/8/2022 5:03:26 PM

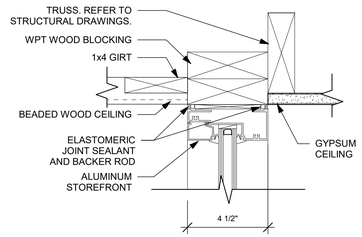

B1 HEAD DETAIL - METAL STOREFRONT
3" = 1'-0"

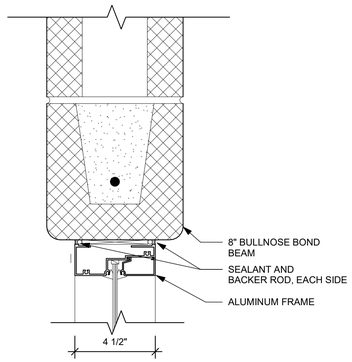

B3 HEAD DETAIL - MASONRY
3" = 1'-0"

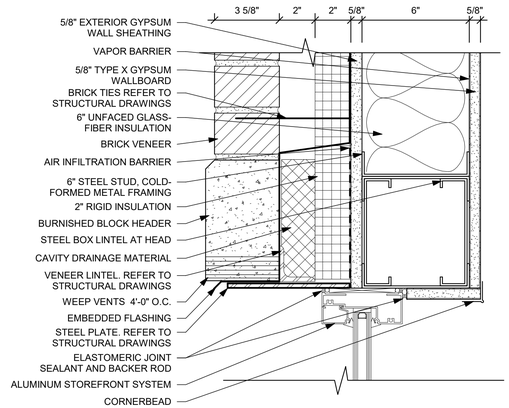

B4 HEAD DETAIL - EXTERIOR WALL
3" = 1'-0"

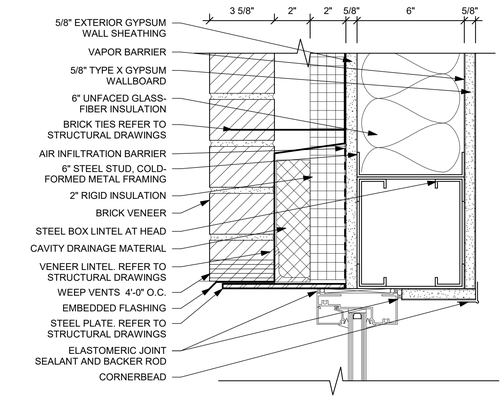

B6 HEAD DETAIL - EXTERIOR WALL
3" = 1'-0"

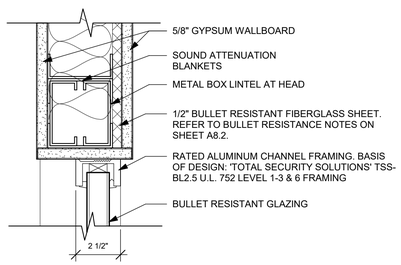

C1 BULLET RESISTANCE HEAD DETAIL
3" = 1'-0"

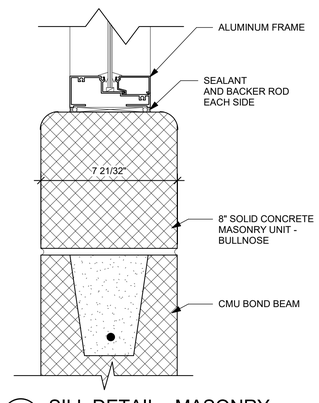

D3 SILL DETAIL - MASONRY
3" = 1'-0"

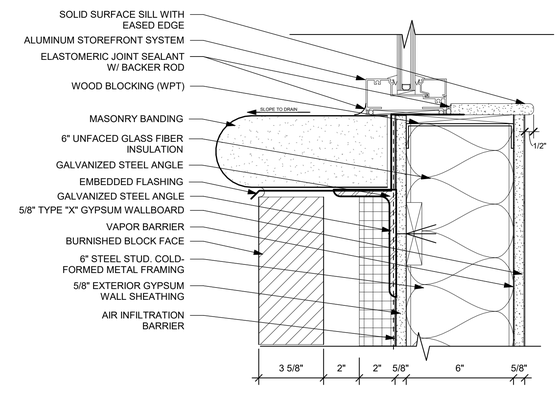

D6 SILL DETAIL - EXTERIOR WALL
3" = 1'-0"

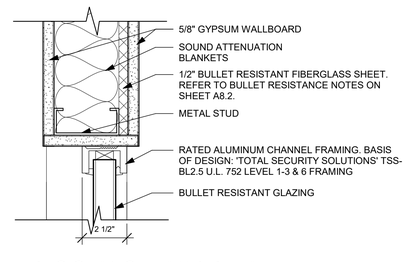

F1 BULLET RESISTANCE JAMB DETAIL
3" = 1'-0"

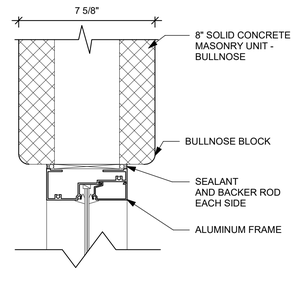

F3 JAMB DETAIL - MASONRY
3" = 1'-0"

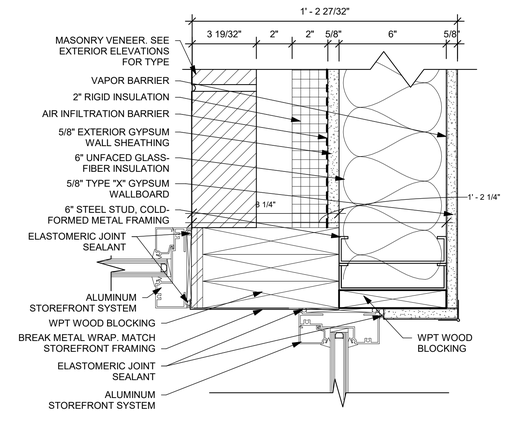

F4 JAMB DETAIL - EXTERIOR WALL
3" = 1'-0"

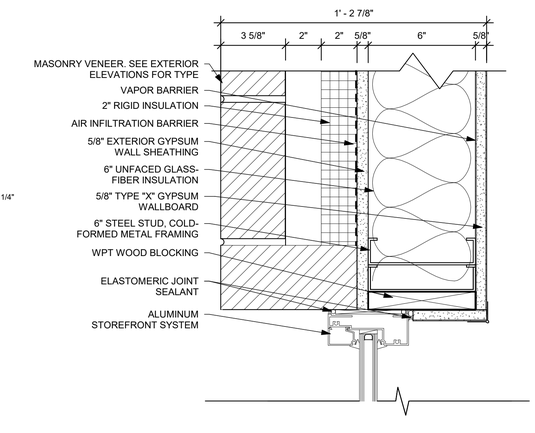

F6 JAMB DETAIL - EXTERIOR WALL
3" = 1'-0"

App Architecture
creative focused design
615 Woodside Drive, Englewood, Ohio 45322
T 937.836.8898 F 937.832.3696
www.app-arch.com

STATE OF OHIO
TIMOTHY J. BEMENT
12305
REGISTERED ARCHITECT
Timothy J. Bement, License #12305
Expiration Date 12/31/2023

MIAMI COUNTY ONE STOP CENTER
BOARD OF COMMISSIONERS FOR MIAMI COUNTY, OHIO
BARNHART ROAD, TROY, OHIO 45373

ISSUE

NO.	DATE	DESCRIPTION
1	04/08/2022	FOR CONSTRUCTION

DATE	04/08/22
JOB NO.	3923.00
DRAWN	MLG
CHECKED	RFW/TJB

COPYRIGHT © 2022 - App Architecture, Inc.

TITLE
WINDOW DETAILS

SHEET NO.
A0.8

4/8/2022 5:03:28 PM

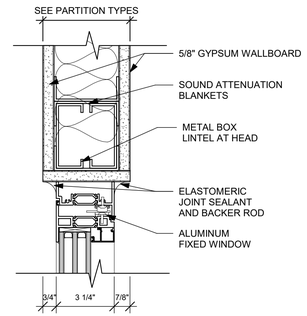

B3 HEAD DETAIL - METAL STUD
3" = 1'-0"

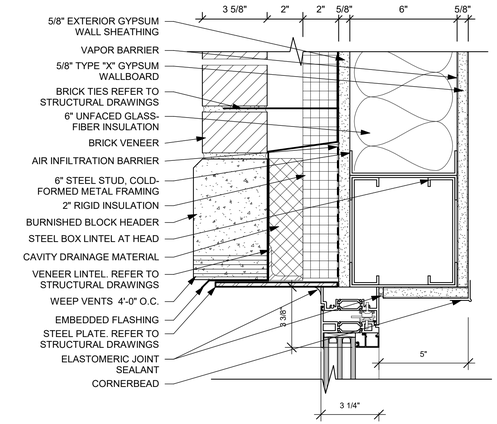

B5 HEAD DETAIL - EXTERIOR WALL
3" = 1'-0"

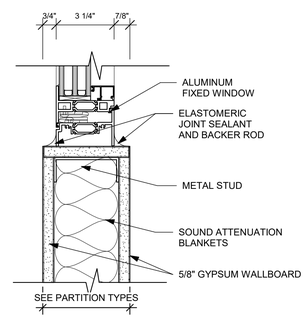

D3 SILL DETAIL - METAL STUD
3" = 1'-0"

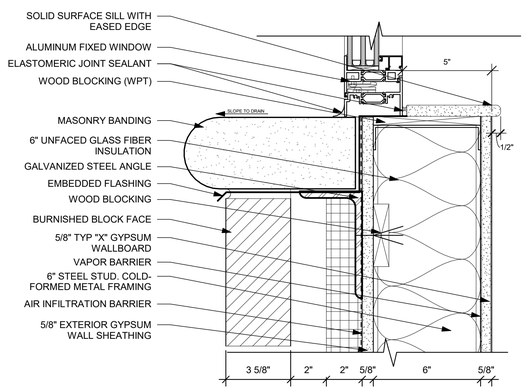

D5 SILL DETAIL - EXTERIOR WALL
3" = 1'-0"

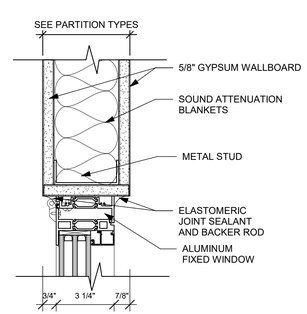

F3 JAMB DETAIL - METAL STUD
3" = 1'-0"

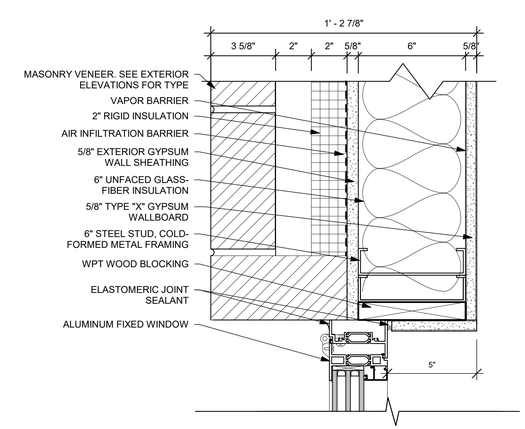

F5 JAMB DETAIL - EXTERIOR WALL
3" = 1'-0"

App Architecture
creative focused design
615 Woodside Drive, Englewood, Ohio 45322
T 937.836.8898 F 937.832.3696
www.app-arch.com

STATE OF OHIO
TIMOTHY J. BEMENT
12305
REGISTERED ARCHITECT
Timothy J. Bement, License #12305
Expiration Date 12/31/2023

MIAMI COUNTY ONE STOP CENTER
BOARD OF COMMISSIONERS FOR MIAMI COUNTY, OHIO
BARNHART ROAD, TROY, OHIO 45373

ISSUE

NO.	DATE	DESCRIPTION
1	04/08/2022	FOR CONSTRUCTION

DATE	04/08/22
JOB NO.	3923.00
DRAWN	MLG
CHECKED	RFW/TJB

COPYRIGHT © 2022 - App Architecture, Inc.

TITLE
WINDOW DETAILS

SHEET NO.
A0.9

4/8/2022 5:03:29 PM

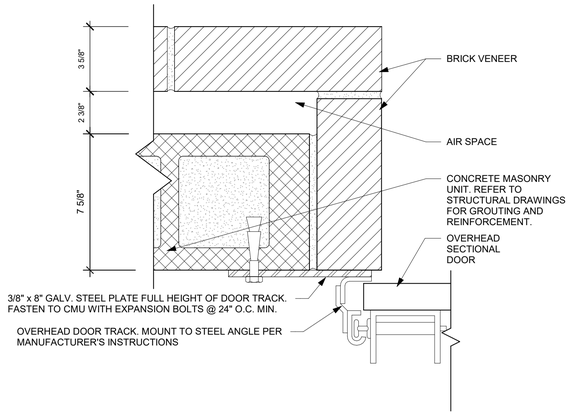

B1 JAMB DETAIL - OVERHEAD DOOR
3" = 1'-0"

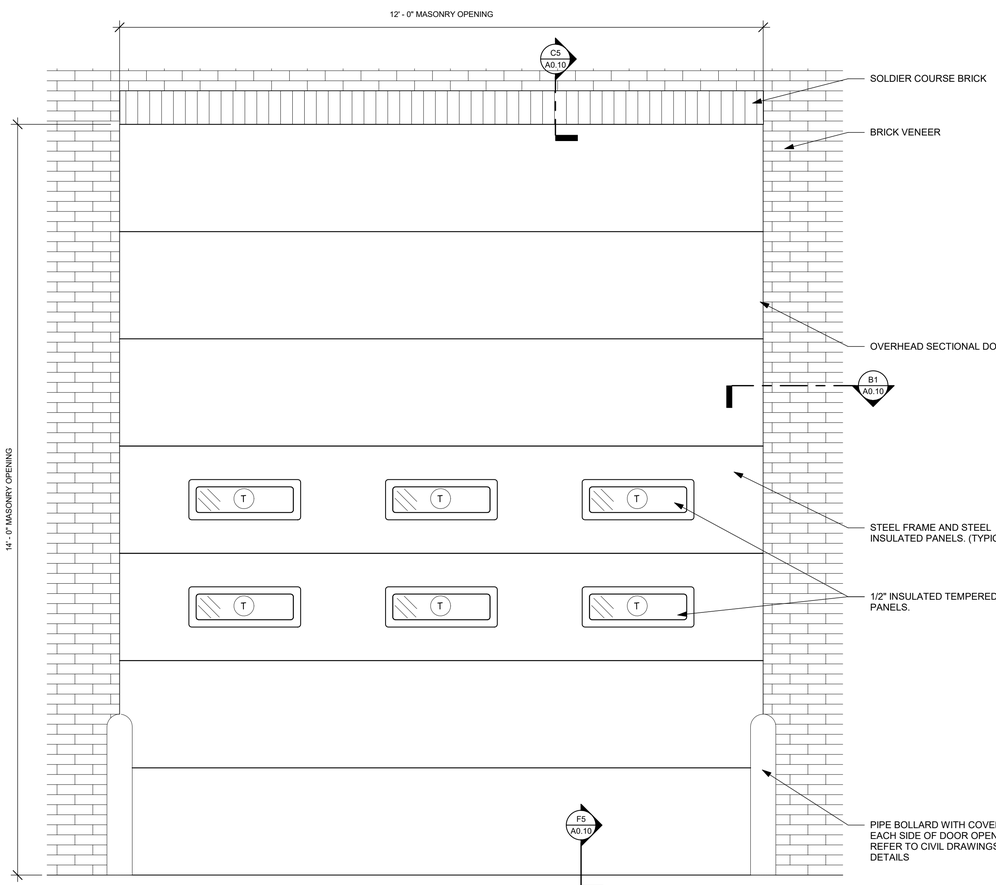

F1 OVERHEAD DOOR DETAIL - EXTERIOR
3/4" = 1'-0"

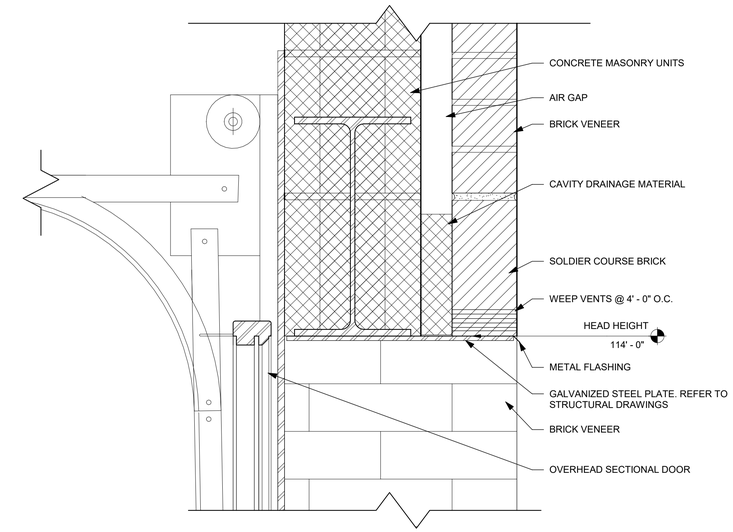

C5 HEAD DETAIL - OVERHEAD DOOR
3" = 1'-0"

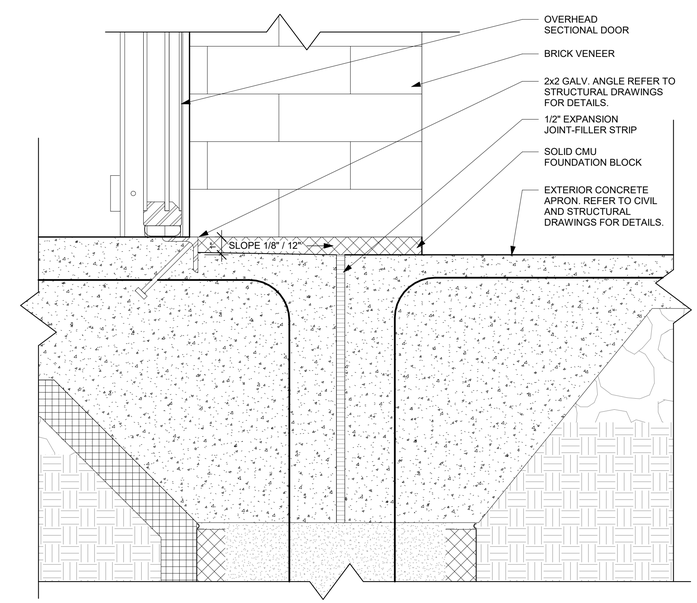

F5 SILL DETAIL - OVERHEAD DOOR
3" = 1'-0"

App Architecture
creative focused design
615 Woodside Drive, Englewood, Ohio 45322
T 937.836.8898 F 937.832.3696
www.app-arch.com

STATE OF OHIO
TIMOTHY J. BEMENT
12305
REGISTERED ARCHITECT
Timothy J. Bement, License #12305
Expiration Date 12/31/2023

MIAMI COUNTY ONE STOP CENTER
BOARD OF COMMISSIONERS FOR MIAMI COUNTY, OHIO
BARNHART ROAD, TROY, OHIO 45373

ISSUE

NO.	DATE	DESCRIPTION
1	04/08/2022	FOR CONSTRUCTION

DATE	04/08/22
JOB NO.	3923.00
DRAWN	MLG
CHECKED	RFW/TJB

COPYRIGHT © 2022 - App Architecture, Inc.

TITLE
OVERHEAD DOOR DETAILS

SHEET NO.
A0.10

4/8/2022 5:03:30 PM

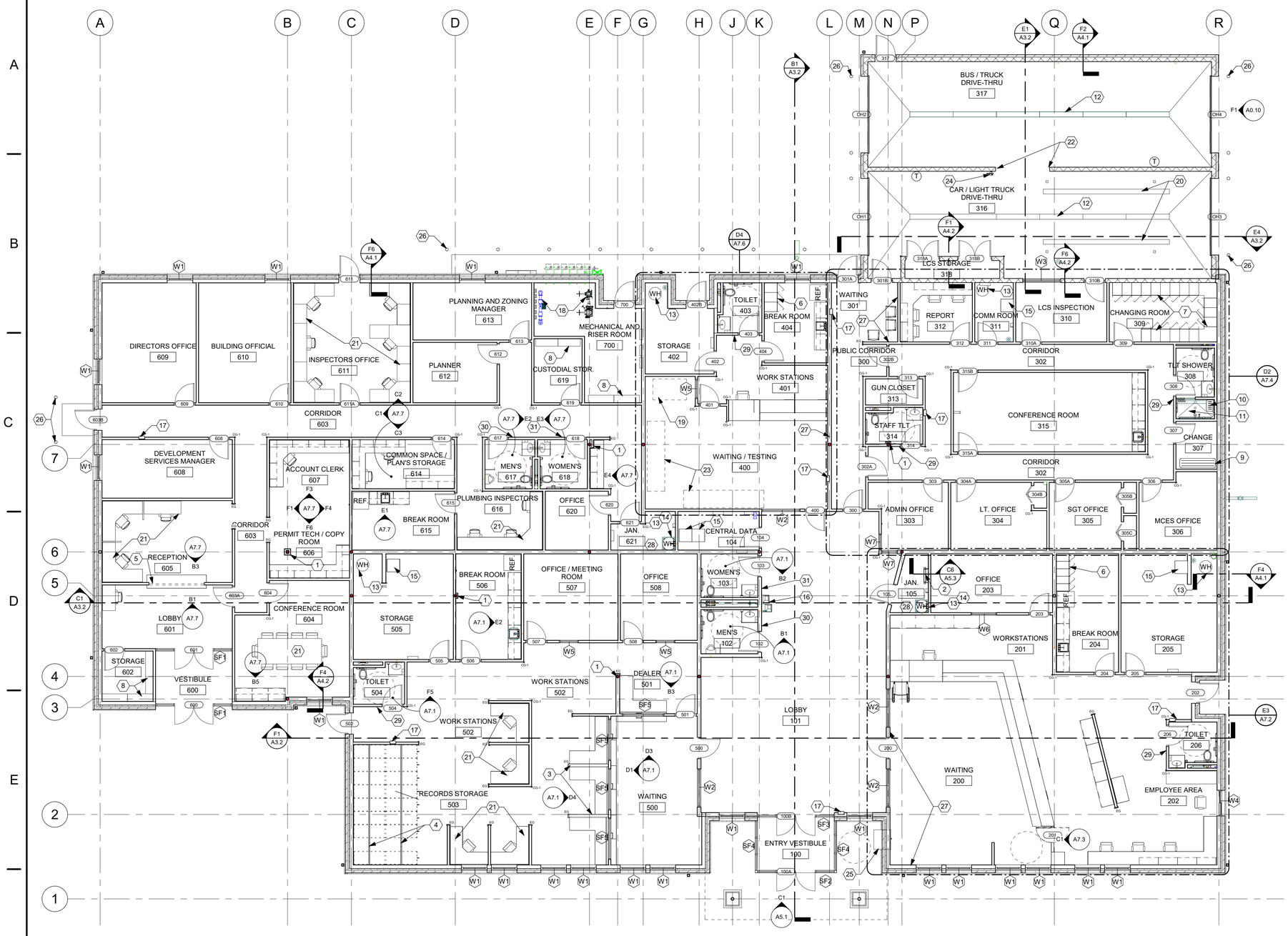

1 FIRST FLOOR REFERENCE PLAN
1/8" = 1'-0"

CONSTRUCTION NOTES

(00) INDICATES CONSTRUCTION NOTE.

1. FRAME AND FINISH WALL AROUND COLUMN.
2. ROOF ACCESS LADDER.
3. 5' PARTITON WALL WITH WOOD CAP.
4. FLOOR RAILS FOR FILE STORAGE UNIT PROVIDED, AND LOCATION COORDINATED BY THE MOBILE STORAGE UNIT VENDOR, INSTALLED BY CONTRACTOR.
5. OPENING THROUGH WALL. FRAME WITH 4" WOOD TRIM. PROVIDE PLASTIC LAMINATE (PL-1) COUNTER.
6. EMPLOYEE LOCKERS (LKR-1).
7. EMPLOYEE FULL HEIGHT LOCKERS (LKR-2).
8. ADJUSTABLE SHELVING. REFER TO F2/A8.1 FOR DETAILS.
9. BELSON MODEL 942SM-P6 STEEL FLAT BENCH WITH PERFORATED PATTERN STEEL OR APPROVED EQUAL.
10. FOLD DOWN SHOWER SEAT.
11. SHOWER WITH TRENCH DRAIN. REFER TO PLUMBING DRAWINGS.
12. TRENCH DRAINS WITH OIL INTERCEPTOR. REFER TO PLUMBING DRAWINGS FOR DETAILS.
13. WATER HEATER. REFER TO PLUMBING DRAWINGS.
14. MOP SINK.
15. DATA RACK. REFER TO ELECTRICAL DRAWINGS.
16. DRINKING FOUNTAIN. REFER TO PLUMBING DRAWINGS.
17. SEMI RECESSED FIRE EXTINGUSHER CABINET. REFER TO SPECIFICATIONS FOR TYPE. REFER TO MOUNTING AND CLEARANCE STANDARDS ON SHEET A0.1.
18. MAIN RISER. REFER TO PLUMBING DRAWINGS.
19. AREA ASSIGNED FOR OWNER'S TRAINING SIMULATOR.
20. OWNER PROVIDED CAR LIFT.
21. FURNITURE BY OWNER. SHOWN FOR REFERENCE ONLY.
22. CMU WITH BULLNOSE EDGE.
23. AREA FOR OWNER'S DRIVER LICENSE TESTING STATION.
24. WALL HUNG FIRE EXTINGUSHER. REFER TO SPECIFICATIONS FOR TYPE. REFER TO MOUNTING AND CLEARANCE STANDARDS ON SHEET A0.1.
25. EXTERIOR KIOSK WITH MAINTENANCE ACCESS FROM INTERIOR. SUPPLIED BY OWNER.
26. PIPE BOLLARDS. REFER TO F6/A5.1 FOR DETAILS AND CIVIL DRAWINGS FOR LOCATIONS.
27. INPRO 500 WALL GUARD OR EQUAL. MOUNT AT 33" A.F.F. COLOR TO BE SELECTED FROM MANUFACTURER'S STANDARD COLORS.
28. ADD SHELF AND MOP HOLDER. REFER TO SPEC.
29. SIGN TYPE 1. REFER TO SIGNAGE LEGEND ON A0.3.
30. SIGN TYPE 2. REFER TO SIGNAGE LEGEND ON A0.3.
31. SIGN TYPE 3. REFER TO SIGNAGE LEGEND ON A0.3.

GENERAL NOTES

A. FOR SIDEWALKS AND EXTERIOR PADS REFER TO CIVIL SITE PLAN AND LANDSCAPE PLAN.

B. "CG" INDICATES CORNER GUARD. REFER TO INTERIOR DETAILS FOR MORE INFORMATION.

C. "EG" INDICATES END WALL GUARD. REFER TO INTERIOR DETAILS FOR MORE INFORMATION.

D. HINGE SIDE OF DOORS ARE 6" FROM ADJACENT WALL U.N.O.

E. FURNITURE SHOWN FOR REFERENCE ONLY. PROVIDED BY OWNER.

App Architecture
creative focused design
615 Woodside Drive, Englewood, Ohio 45322
T 937.836.8898 F 937.832.3696
www.app-arch.com

STATE OF OHIO
TIMOTHY J. BEMENT
12305
REGISTERED ARCHITECT
Timothy J. Bement, License #12305
Expiration Date 12/31/2023

MIAMI COUNTY ONE STOP CENTER
BOARD OF COMMISSIONERS FOR MIAMI COUNTY, OHIO
BARNHART ROAD, TROY, OHIO 45373

ISSUE

NO.	DATE	DESCRIPTION
1	04/08/2022	FOR CONSTRUCTION

DATE	04/08/22
JOB NO.	3923.00
DRAWN	MLG
CHECKED	RFW/TJB

COPYRIGHT © 2022 - App Architecture, Inc.

TITLE
REFERENCE PLAN

SHEET NO.
A1.1

4/8/2022 5:03:39 PM

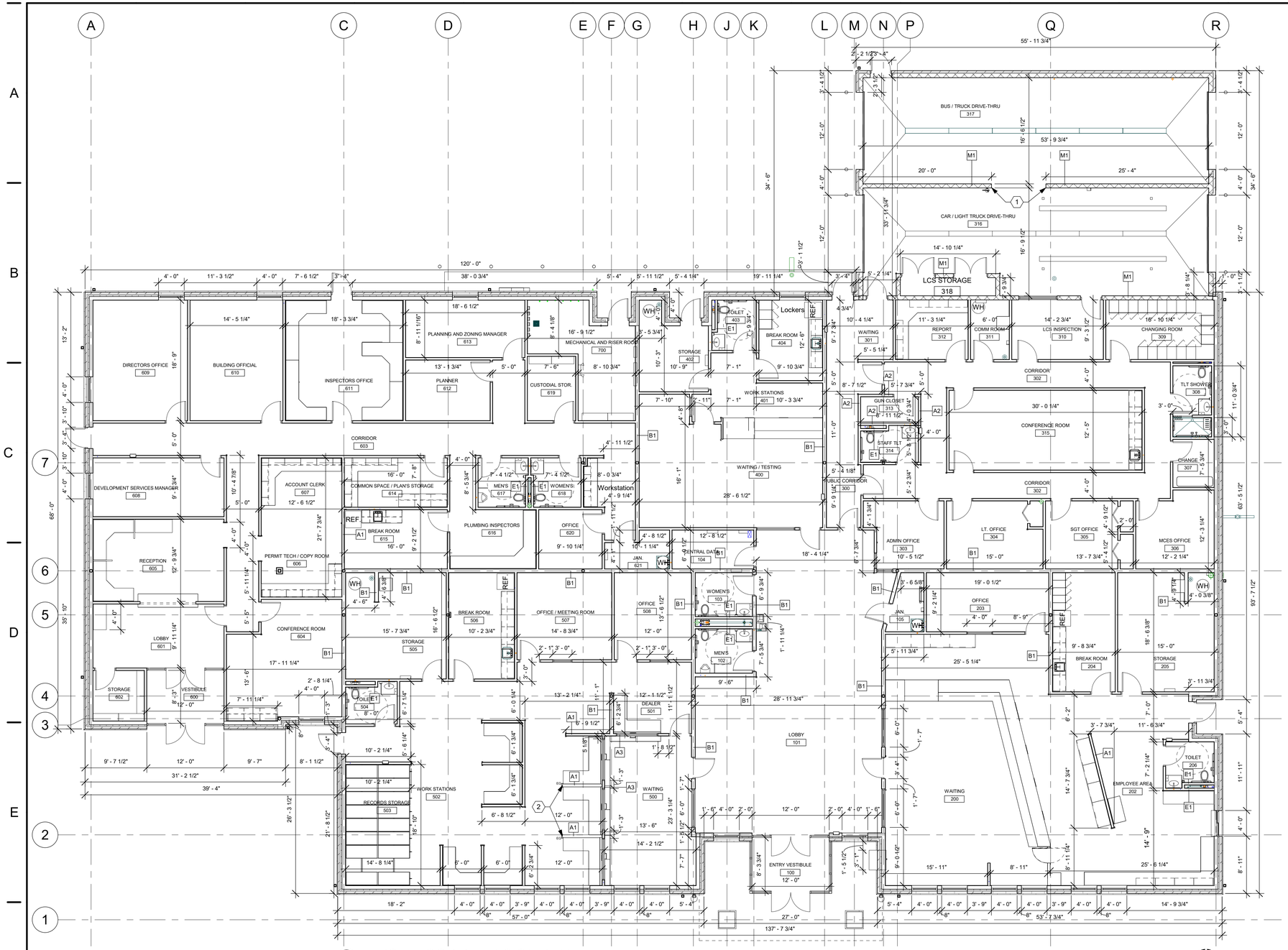

1 FIRST FLOOR DIMENSION PLAN
1/8" = 1'-0"

CONSTRUCTION NOTES

(00) INDICATES CONSTRUCTION NOTE.

1. ALIGN
2. FIVE FOOT HIGH PARTITION.

GENERAL NOTES

A. ALL INTERIOR PARTITIONS ARE TYPE A1 U.N.O.

B. ALL PARTITIONS TO BE CONSTRUCTED TO STRUCTURE ABOVE U.N.O.

C. PROVIDE FIRE RETARDANT WOOD BLOCKING BEHIND ALL WALL HUNG ACCESSORIES, CABINETS, FURNISHINGS, HANDRAILS U.N.O.

D. REFER TO ENLARGED PLANS FOR ADDITONAL DIMENSIONS.

E. REFER TO SHET A0.5 FOR WALL TYPE SCHEDULE.

F. ALL DIMENSIONS ARE FROM FINISH FACE TO FINISH FACE OF CONSTRUCTION U.N.O.

G. ALL PLUMBING FIXTURES WITH DOUBLE ROW OF STUDS HAVE SOUND ATTENUATION BATTS IN BOTH ROWS OF STUDS.

App Architecture
creative focused design
615 Woodside Drive, Englewood, Ohio 45322
T 937.836.8898 F 937.832.3696
www.app-arch.com

STATE OF OHIO
TIMOTHY J. BEMENT
12305
REGISTERED ARCHITECT
Timothy J. Bement, License #12305
Expiration Date 12/31/2023

MIAMI COUNTY ONE STOP CENTER
BOARD OF COMMISSIONERS FOR MIAMI COUNTY, OHIO
BARNHART ROAD, TROY, OHIO 45373

ISSUE

NO.	DATE	DESCRIPTION
1	04/08/2022	FOR CONSTRUCTION

DATE	04/08/22
JOB NO.	3923.00
DRAWN	MLG
CHECKED	RFW/TJB

COPYRIGHT © 2022 - App Architecture, Inc.

TITLE
DIMENSION PLAN

SHEET NO.
A1.2

4/8/2022 5:03:42 PM

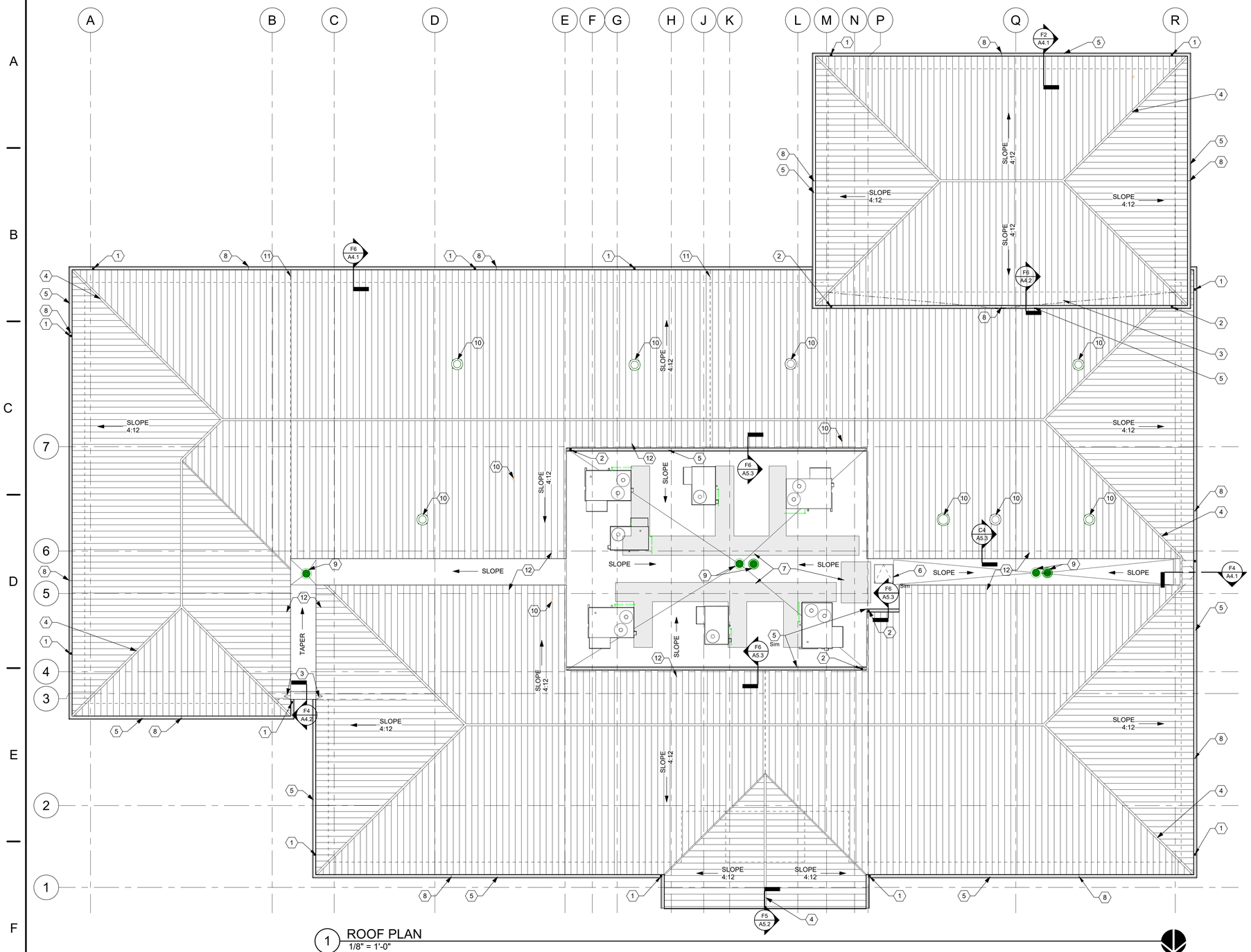

1 ROOF PLAN
1/8" = 1'-0"

CONSTRUCTION NOTES

INDICATES CONSTRUCTION NOTE.

1. DOWNSPOUT LOCATION WITH 24" DOWNSPOUT ADAPTOR AT GRADE. REFER TO C6/A5.1 FOR DETAILS.
2. DOWNSPOUT LOCATION. DRAIN ON TO ROOF BELOW.
3. SADDLE FLASHING, CRICKET - BASIS OF DESIGN: SMACNA FIGURE 4-17B. PROVIDE STEP FLASHING AT RAISED WALL.
4. CONTINUOUS RIDGE VENT. SEE B5/A5.2 FOR DETAILS.
5. 6" PREFINISHED ALUMINUM GUTTER.
6. ROOF HATCH. 36" x 30" WITH STEEL LADDER-UP SAFETY POST. BASIS OF DESIGN. BILCO TYPE S OR EQUAL.
7. CONTINUOUS WALKWAY PADS BY EPDM ROOFING MANUFACTURER.
8. GUTTER EXPANSION JOINT - INSTALL PER LATEST EDITION OF SMACNA STANDARDS. GUTTER EXPANSION JOINTS SPACING NOT TO EXCEED 40 FT.
9. ROOF DRAINS. REFER TO PLUMBING DRAWINGS.
10. ROOF PENETRATION. REFER TO PLUMBING AND MECHANICAL DRAWINGS.
11. DRAFTSTOPPING LOCATIONS. AREA BETWEEN NOT TO EXCEED 3,000 S.F.
12. SNOW GUARD ATTACHED TO STANDING SEAMS PER SPECIFIC STANDING SEAM MANUFACTURER'S REQUIREMENTS. TYPICAL AT ALL SLOPED ROOF RIDGES OVER FLAT ROOF.

GENERAL NOTES

A. ROOF IS METAL STANDING SEAM PANELS OVER ICE AND WATER SHIELD UNDERLAYMENT AND APA RATED SHEATHING. REFER TO STRUCTURAL DRAWINGS FOR SHEATHING DETAILS.

B. COORDINATE ROOF PENETRATIONS WITH PLUMBING, MECHANICAL, AND ELECTRICAL DRAWINGS.

C. ALL PENETRATIONS THROUGH ROOF (I.E. VENTS, FLUES, ETC.) SHALL BE PAINTED TO MATCH ROOF.

D. ROOF VENTILATION TO BE MAINTAINED @ A MINIMUM OF 1:150 RATIO. (1/150) X 16,830 = 112 SF OF VENTILATION MINIMUM. PROVIDE 1/2 AT RIDGE PEAKS AND 1/2 THROUGH VENTED SOFFITS.

ROOF PLAN LEGEND

- - - - - - INDICATES EXTERIOR EDGE OF WALL BELOW

—·—·— INDICATES EXTENTS OF ROOF SADDLE BELOW

App Architecture
creative focused design
615 Woodside Drive, Englewood, Ohio 45322
T 937.836.8898 F 937.832.3696
www.app-arch.com

STATE OF OHIO
TIMOTHY J. BEMENT
12305
REGISTERED ARCHITECT
Timothy J. Bement, License #12305
Expiration Date 12/31/2023

MIAMI COUNTY ONE STOP CENTER
BOARD OF COMMISSIONERS FOR MIAMI COUNTY, OHIO
BARNHART ROAD, TROY, OHIO 45373

ISSUE

NO.	DATE	DESCRIPTION
1	04/08/2022	FOR CONSTRUCTION

DATE	04/08/22
JOB NO.	3923.00
DRAWN	MLG
CHECKED	RFW/TJB

COPYRIGHT © 2022 - App Architecture, Inc.

TITLE
ROOF PLAN

SHEET NO.
A1.3

4/8/2022 5:03:53 PM

1 REFLECTED CEILING PLAN
1/8" = 1'-0"

CONSTRUCTION NOTES

⟨00⟩ INDICATES CONSTRUCTION NOTE.

1. OPEN TO STRUCTURE ABOVE.
2. 5/8" SHEETROCK EXTERIOR CEILING BOARD @ 8' - 0" A.F.F.
3. BULKHEAD AT 7' - 6" A.F.F.
4. BULKHEAD AT 8' - 6" A.F.F.
5. LADDER WITH ROOF HATCH ABOVE. 36" x 30" WITH LADDER-UP SAFETY POST. BASIS OF DESIGN. BILCO TYPE S OR EQUAL.
6. BEADED WOOD CEILING AT 11' - 10" A.F.F.
7. VESTIBULE OVERHANG. REFER TO SHEET A5.1 FOR DETAILS.

GENERAL NOTES

A. REFER TO ROOM FINISH SCHEDULE, MATERIALS LEGEND, AND SPECIFICATIONS FOR CEILING TYPES AND FINISHES.

B. MEASURE CEILING LAYOUT GRIDS TO BALANCE BORDER WIDTHS AT OPPOSITE EDGES. BORDER TILES TO BE 3" MINIMUM U.N.O. INSTALL EDGE MOLDING AT PERIMETER U.N.O.

C. EXPOSED STRUCTURE SHALL BE PAINTED PER SPECIFICATIONS.

D. ALL DEVICES INSTALLED IN THE ACOUSTICAL PANEL CEILINGS ARE TO BE CENTERED IN THE TILE.

E. REFER TO PME DRAWINGS FOR DEVICE DESCRIPTIONS.

F. CONTRACTOR TO BRING ANY CONFLICTS TO THE ARCHITECT'S ATTENTION PRIOR TO INSTALLATION.

App Architecture
creative focused design
615 Woodside Drive, Englewood, Ohio 45322
T 937.836.8898 F 937.832.3696
www.app-arch.com

STATE OF OHIO
TIMOTHY J. BEMENT
12305
REGISTERED ARCHITECT
Timothy J. Bement, License #12305
Expiration Date 12/31/2023

MIAMI COUNTY ONE STOP CENTER
BOARD OF COMMISSIONERS FOR MIAMI COUNTY, OHIO
BARNHART ROAD, TROY, OHIO 45373

ISSUE

NO.	DATE	DESCRIPTION
1	04/08/2022	FOR CONSTRUCTION

DATE	04/08/22
JOB NO.	3923.00
DRAWN	MLG
CHECKED	RFW/TJB

COPYRIGHT © 2022 - App Architecture, Inc.

TITLE
REFLECTED CEILING PLAN

SHEET NO.
A2.1

4/8/2022 5:03:57 PM

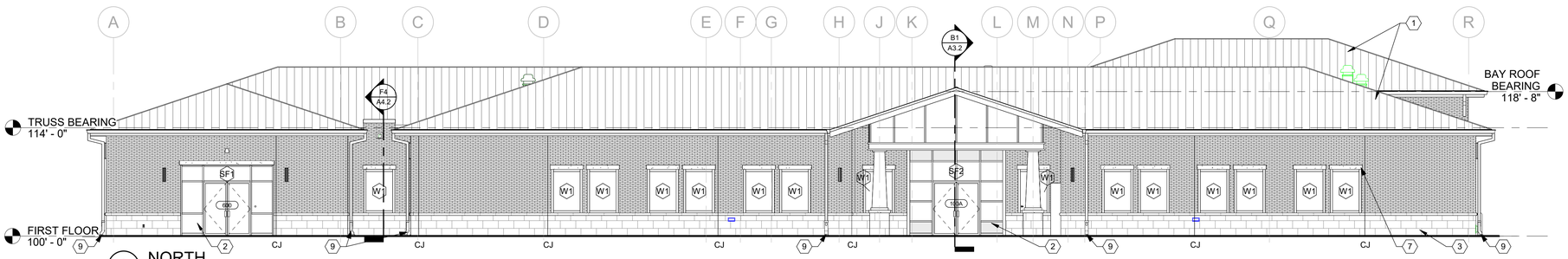

A NORTH
1/8" = 1'-0"

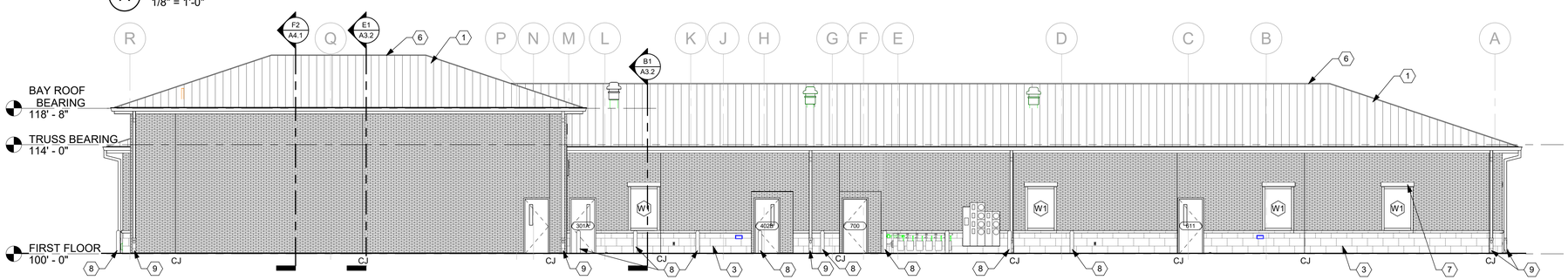

B SOUTH
1/8" = 1'-0"

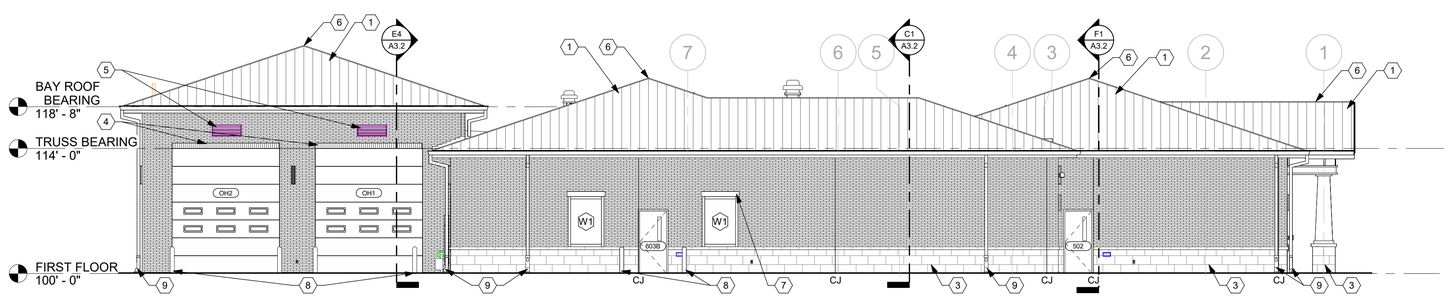

C EAST
1/8" = 1'-0"

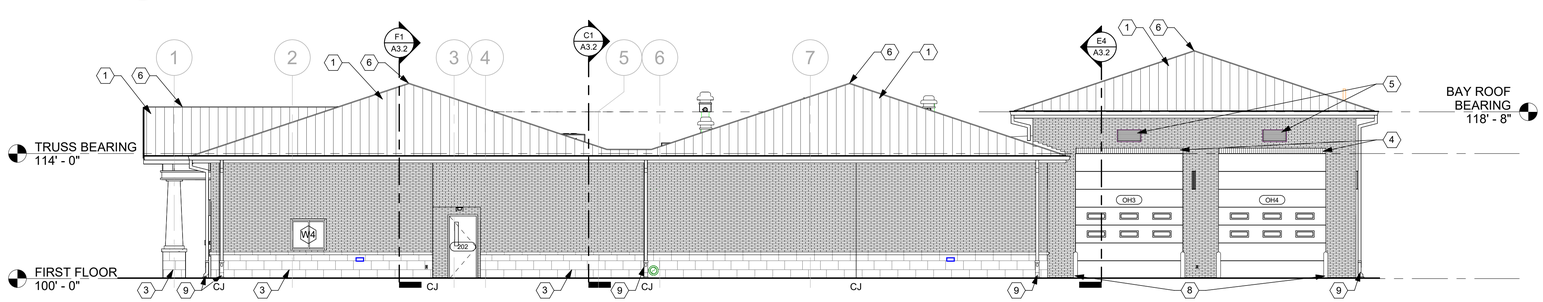

D WEST
1/8" = 1'-0"

CONSTRUCTION NOTES

(00) INDICATES CONSTRUCTION NOTE.

1. METAL STANDING SEAM ROOF.
2. INSULATED STOREFRONT VESTIBULE.
3. BURNISHED MASONRY WAINSCOAT.
4. MASONRY SOILDER COURSE.
5. MECHANICAL LOUVERS. REFER TO MECHANICAL DRAWINGS.
6. CONTINUOUS RIDGE VENT.
7. BURNISHED BLOCK HEADER. OVERHANGS 2" EACH SIDE OF WINDOW. TYPICAL ALL W1 WINDOWS.
8. PIPE BOLLARDS. REFER TO F6/A5.1 FOR DETAILS AND CIVIL DRAWINGS FOR LOCATIONS.
9. 4" x 4" PREFINISHED ALUMINUM DOWNSPOUT WITH 24" DOWNSPOUT ADAPTOR. REFER TO C6/A5.1 FOR DETAILS.

GENERAL NOTES

A. "CJ" = MASONRY CONTROL JOINT.

B. FOR SIDEWALKS AND EXTERIOR PADS REFER TO CIVIL SITE PLAN.

App Architecture
creative focused design
615 Woodside Drive, Englewood, Ohio 45322
T 937.836.8898 F 937.832.3696
www.app-arch.com

STATE OF OHIO
TIMOTHY J. BEMENT
12305
REGISTERED ARCHITECT
Timothy J. Bement, License #12305
Expiration Date 12/31/2023

MIAMI COUNTY ONE STOP CENTER
BOARD OF COMMISSIONERS FOR MIAMI COUNTY, OHIO
BARNHART ROAD, TROY, OHIO 45373

ISSUE

NO.	DATE	DESCRIPTION
1	04/08/2022	FOR CONSTRUCTION

DATE	04/08/22
JOB NO.	3923.00
DRAWN	MLG
CHECKED	RFW/TJB

COPYRIGHT © 2022 - App Architecture, Inc.

TITLE
EXTERIOR ELEVATIONS

SHEET NO.
A3.1

4/8/2022 5:04:04 PM

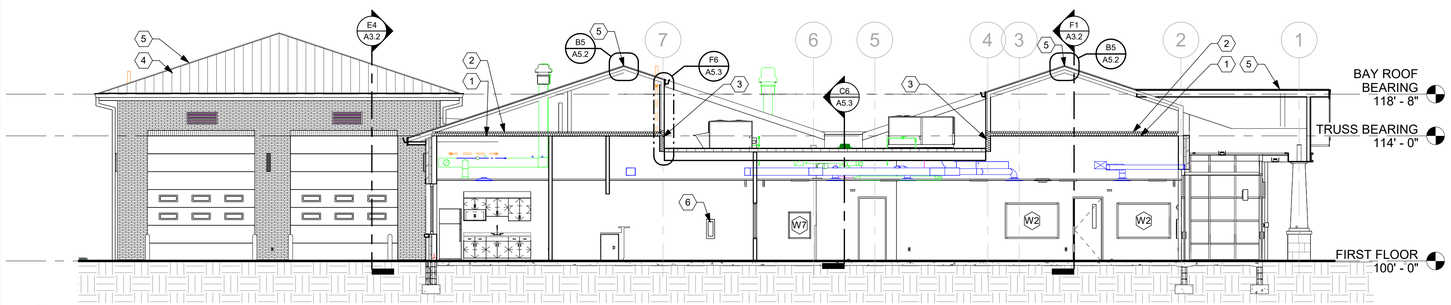

B1 BUILDING SECTION
1/8" = 1'-0"

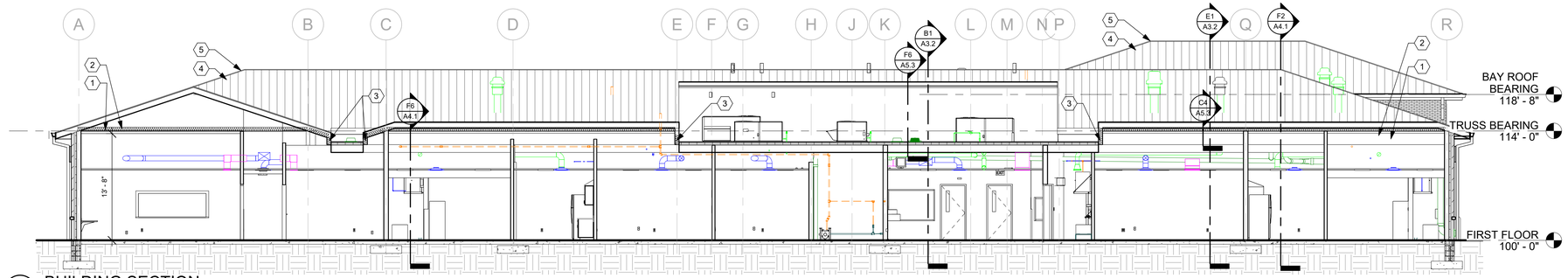

C1 BUILDING SECTION
1/8" = 1'-0"

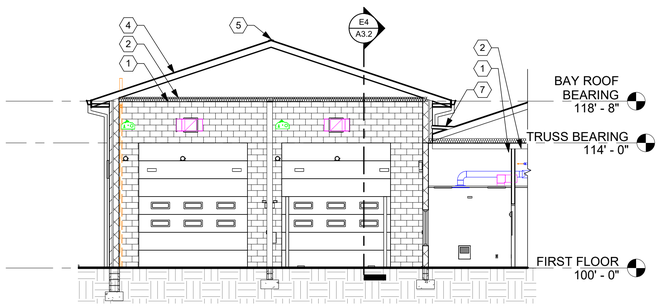

E1 BUILDING SECTION
1/8" = 1'-0"

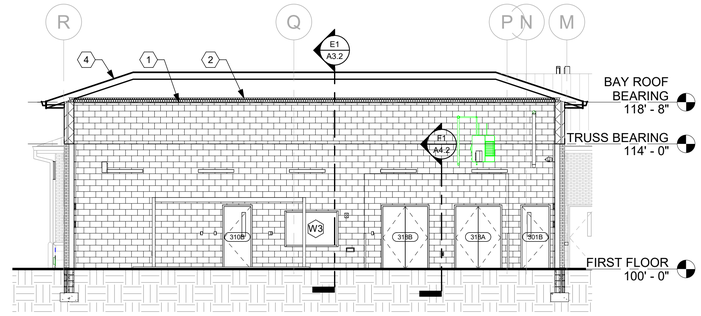

E4 BUILDING SECTION
1/8" = 1'-0"

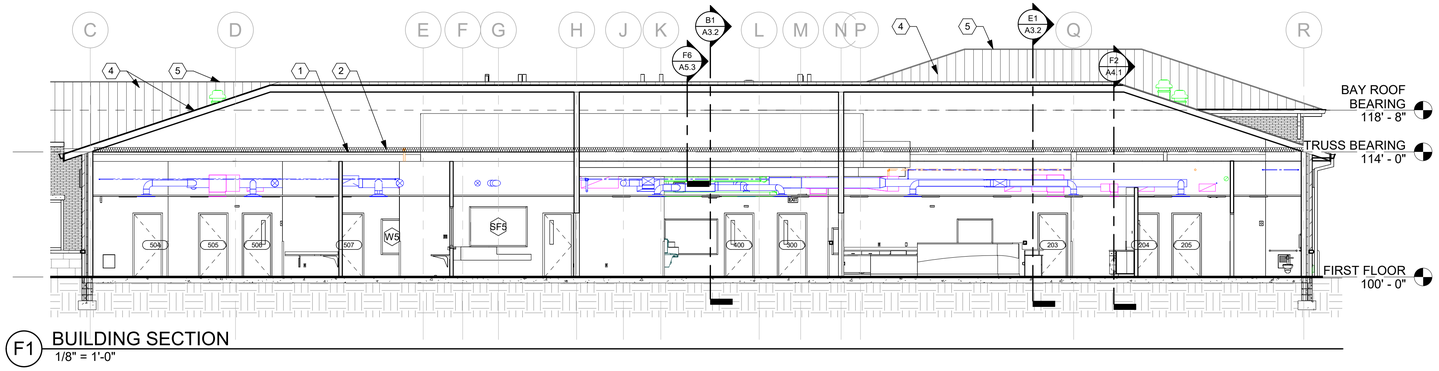

F1 BUILDING SECTION
1/8" = 1'-0"

CONSTRUCTION NOTES

(00) INDICATES CONSTRUCTION NOTE.

1. 5/8" TYPE "X" GYPSUM BOARD ATTACHED TO BOTTOM OF TRUSSES.
2. LOOSE FILL GLASS FIBER INSULTAION WITH DRAFTSTOPPING ALONG BOTTOM CHORD OF TRUSSES.
3. GLASS FIBER BATT INSULATION ALONG VERTICAL FACES OF TRUSSES ABOVE CONDITIONED SPACE.
4. METAL STANDING SEAM PANELS.
5. CONTINUOUS RIDGE VENT.
6. SEMI RECESSED FIRE EXTINGUSHER CABINET. SEE SPECIFICATIONS FOR TYPE. REFER TO MOUNTING AND CLEARANCE STANDARDS ON SHEET A0.1.
7. 1/4" : 12" SLOPE SADDLE FLASHING, CRICKET - BASIS OF DESIGN: SMACNA FIGURE 4-17B. PROVIDE STEP FLASHING AT RAISED WALL.

GENERAL NOTES

A. TRUSSES SHOWN FOR REFERENCE ONLY. REFER TO STRUCTURAL DRAWINGS FOR FRAMING DETAILS.

B. FOR SIDEWALKS AND EXTERIOR PADS REFER TO CIVIL SITE PLAN.

App Architecture
creative focused design
615 Woodside Drive, Englewood, Ohio 45322
T 937.836.8898 F 937.832.3696
www.app-arch.com

STATE OF OHIO
TIMOTHY J. BEMENT
12305
REGISTERED ARCHITECT
Timothy J. Bement, License #12305
Expiration Date 12/31/2023

MIAMI COUNTY ONE STOP CENTER
BOARD OF COMMISSIONERS FOR MIAMI COUNTY, OHIO
BARNHART ROAD, TROY, OHIO 45373

ISSUE

NO.	DATE	DESCRIPTION
1	04/08/2022	FOR CONSTRUCTION

DATE	04/08/22
JOB NO.	3923.00
DRAWN	MLG
CHECKED	RFW/TJB

COPYRIGHT © 2022 - App Architecture, Inc.

TITLE
BUILDING SECTIONS

SHEET NO.
A3.2

4/8/2022 5:04:10 PM

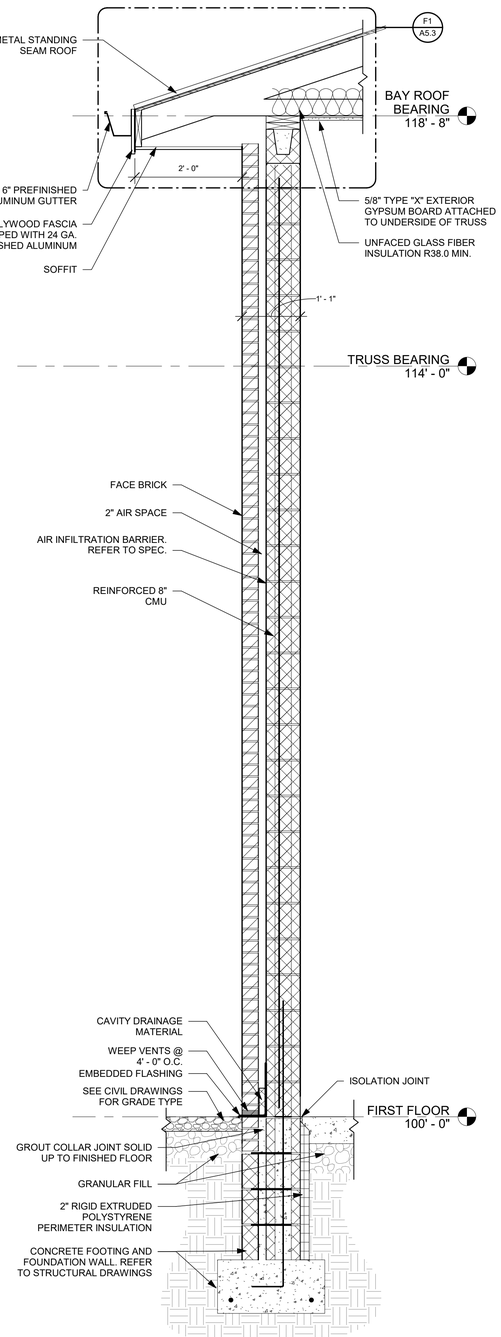

F2 CMU WALL SECTION
3/4" = 1'-0"

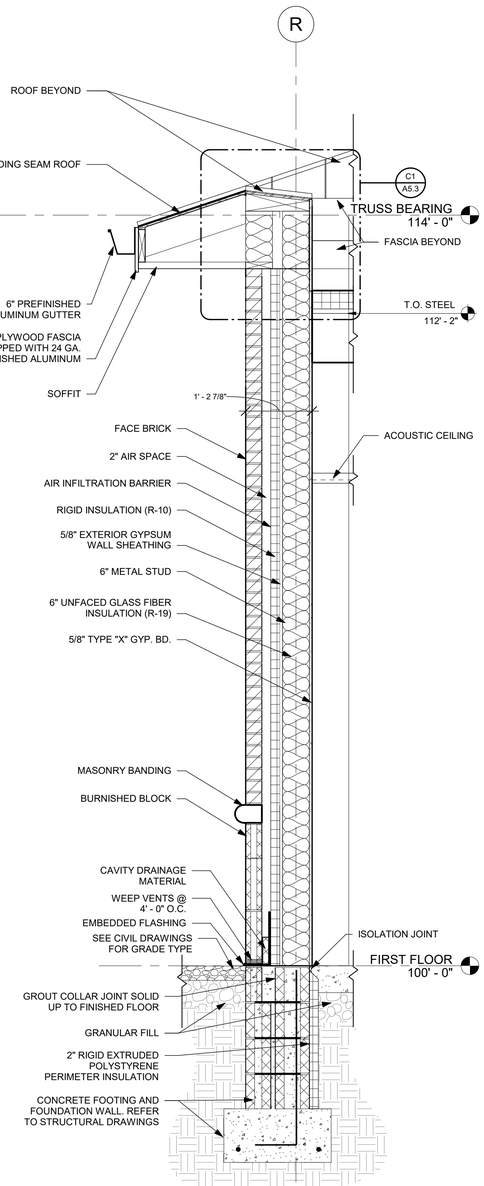

F4 FLAT ROOF PARAPET SECTION
3/4" = 1'-0"

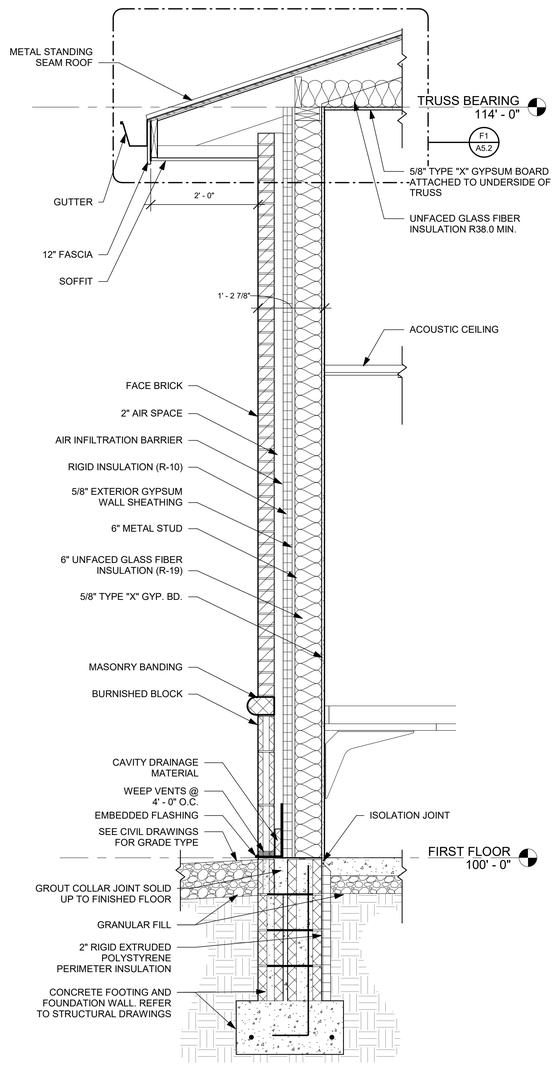

F6 STANDARD WALL SECTION
3/4" = 1'-0"

App Architecture
creative focused design
615 Woodside Drive, Englewood, Ohio 45322
T 937.836.8898 F 937.832.3696
www.app-arch.com

STATE OF OHIO TIMOTHY J. BEMENT 12305 REGISTERED ARCHITECT
Timothy J. Bement, License #12305
Expiration Date 12/31/2023

MIAMI COUNTY ONE STOP CENTER
BOARD OF COMMISSIONERS FOR MIAMI COUNTY, OHIO
BARNHART ROAD, TROY, OHIO 45373

ISSUE

NO.	DATE	DESCRIPTION
1	04/08/2022	FOR CONSTRUCTION

DATE	04/08/22
JOB NO.	3923.00
DRAWN	MLG
CHECKED	RFW/TJB

COPYRIGHT © 2022 - App Architecture, Inc.

TITLE
WALL SECTIONS

SHEET NO.
A4.1

4/8/2022 5:04:12 PM

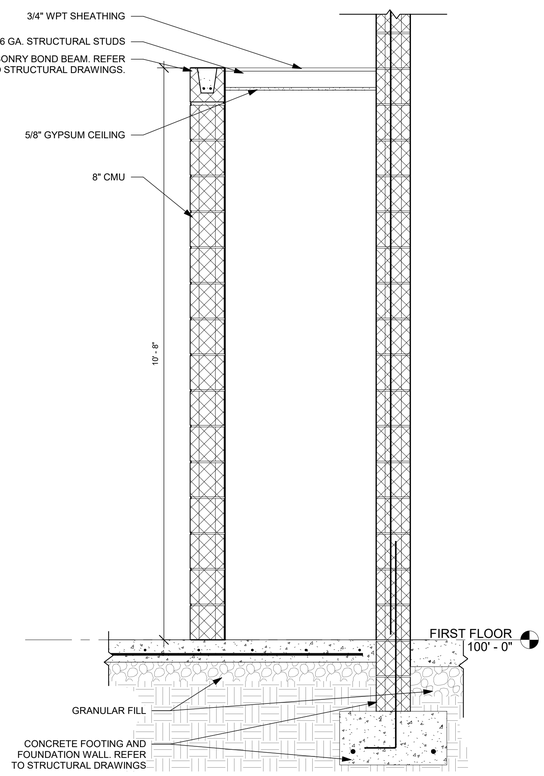

F1 LCS STORAGE ROOM SECTION
3/4" = 1'-0"

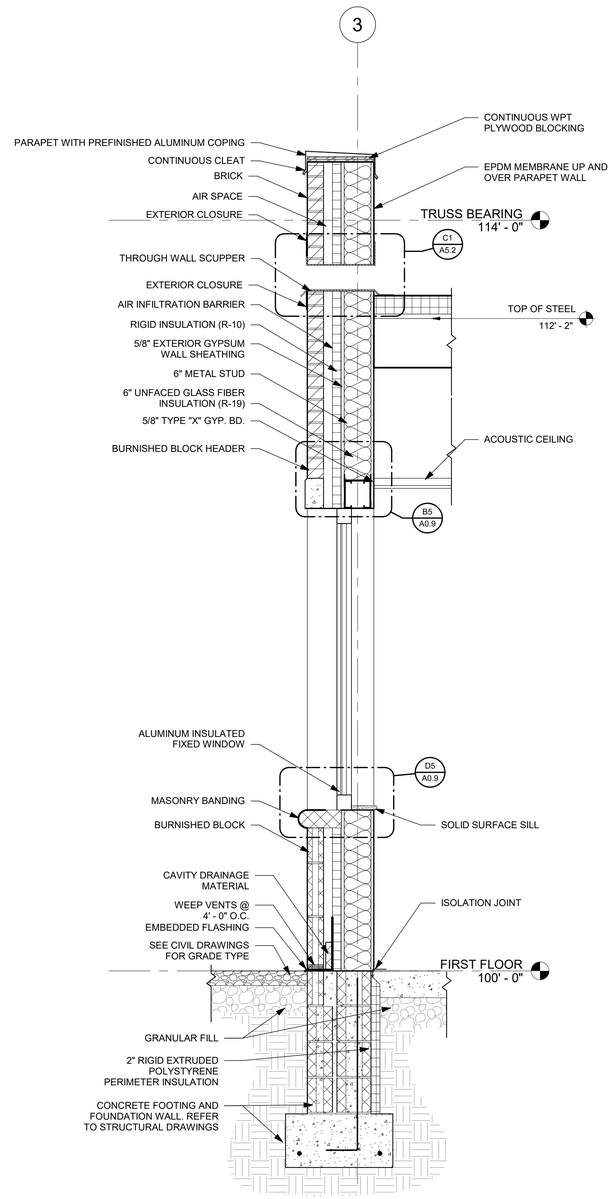

F4 FLAT ROOF PARAPET WALL SECTION
3/4" = 1'-0"

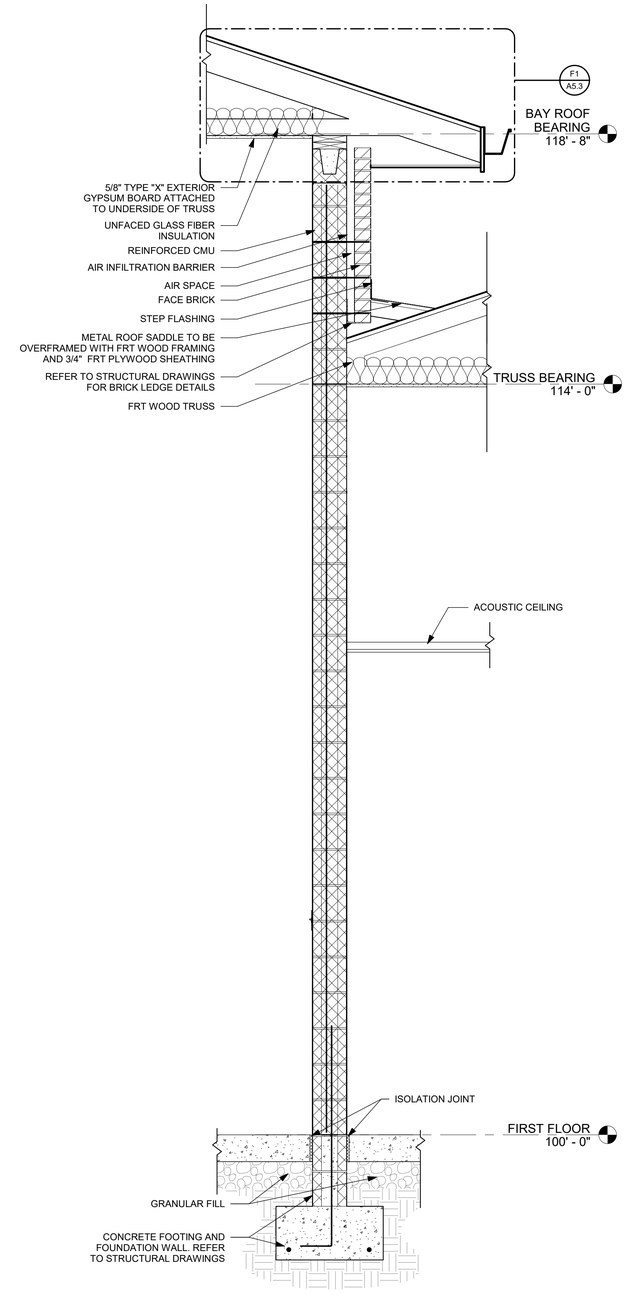

F6 CMU WALL SECTION
3/4" = 1'-0"

App Architecture
creative focused design
615 Woodside Drive, Englewood, Ohio 45322
T 937.836.8898 F 937.832.3696
www.app-arch.com

STATE OF OHIO
TIMOTHY J. BEMENT
12305
REGISTERED ARCHITECT
Timothy J. Bement, License #12305
Expiration Date 12/31/2023

MIAMI COUNTY ONE STOP CENTER
BOARD OF COMMISSIONERS FOR MIAMI COUNTY, OHIO
BARNHART ROAD, TROY, OHIO 45373

ISSUE

NO.	DATE	DESCRIPTION
1	04/08/2022	FOR CONSTRUCTION

DATE	04/08/22
JOB NO.	3923.00
DRAWN	MLG
CHECKED	RFW/TJB

COPYRIGHT © 2022 - App Architecture, Inc.

TITLE
WALL SECTIONS

SHEET NO.
A4.2

4/8/2022 5:04:13 PM

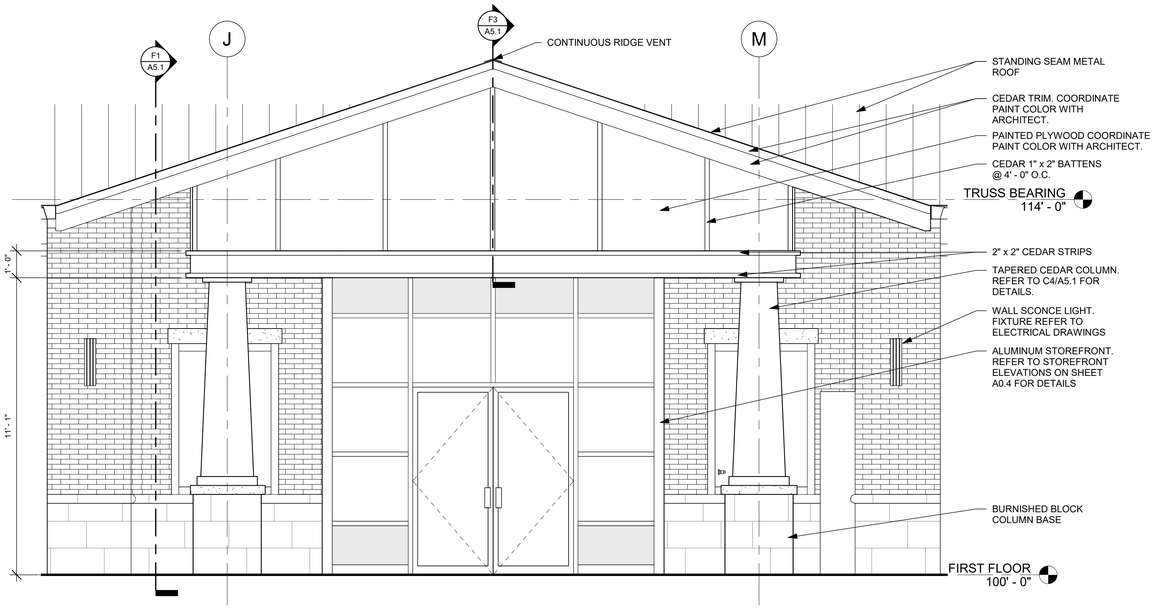

C1 ENTRY VESTIBULE NORTH ELEVATION
3/8" = 1'-0"

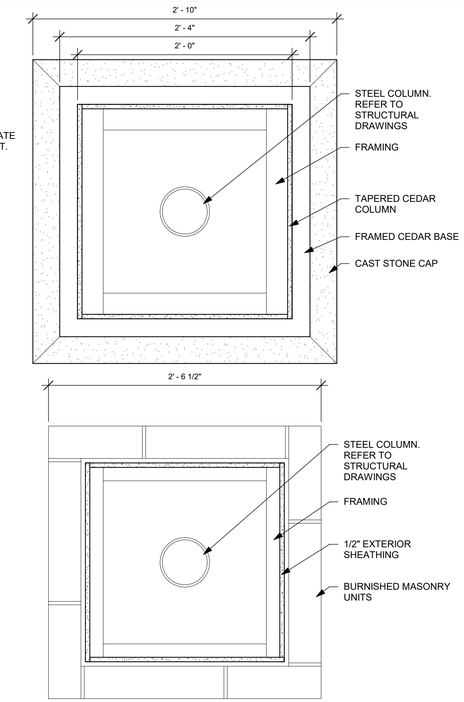

C4 COLUMN PLAN
1 1/2" = 1'-0"

BASIS OF DESIGN: PIEDMONT MANUFACTURING, PIEDMONT PIPE DOWNSPUT - MODEL SO. OFFSETS AND SIZING TO BE COORDINATED WITH DOWNSPOUTS AND STORM PIPING.

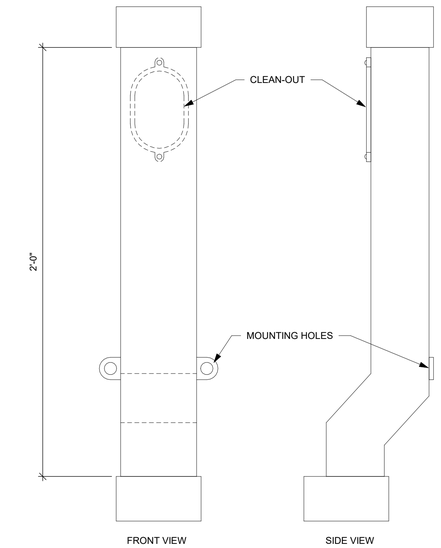

C6 DOWNSPOUT ADAPTOR
3" = 1'-0"

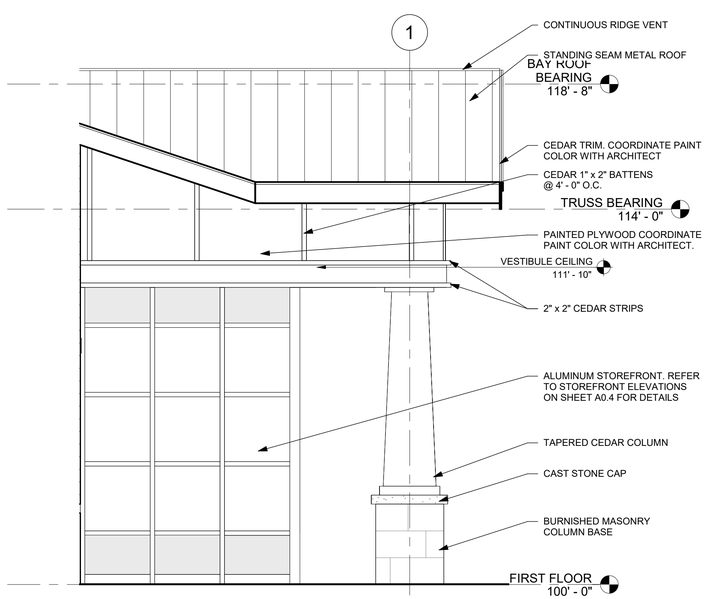

F1 ENTRY VESTIBULE EAST ELEVATION
3/8" = 1'-0"

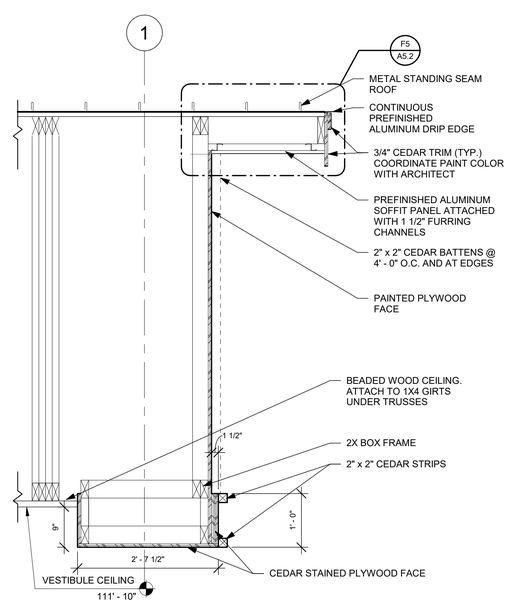

F3 ENTRY OVERHANG SECTION
3/4" = 1'-0"

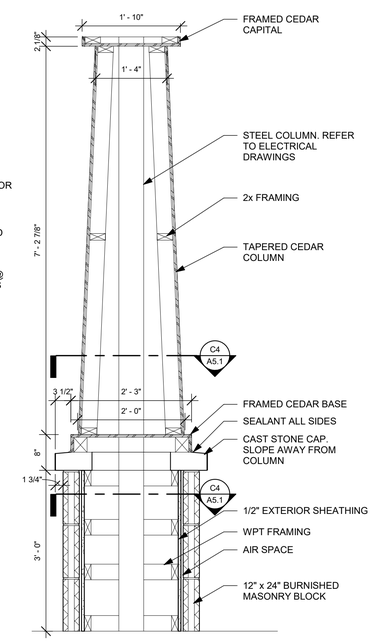

F5 ENTRY COLUMN SECTION
3/4" = 1'-0"

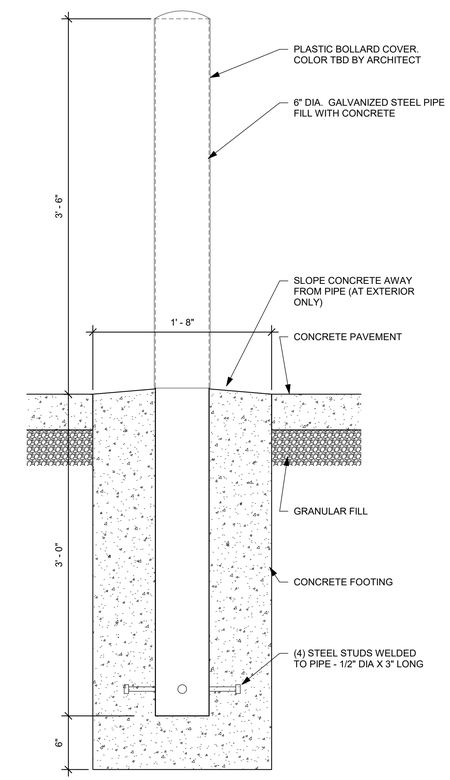

F6 PIPE BOLLARD DETAIL
1 1/2" = 1'-0"

App Architecture
creative focused design
615 Woodside Drive, Englewood, Ohio 45322
T 937.836.8898 F 937.832.3696
www.app-arch.com

STATE OF OHIO TIMOTHY J. BEMENT 12305 REGISTERED ARCHITECT
Timothy J. Bement, License #12305
Expiration Date 12/31/2023

MIAMI COUNTY ONE STOP CENTER
BOARD OF COMMISSIONERS FOR MIAMI COUNTY, OHIO
BARNHART ROAD, TROY, OHIO 45373

ISSUE

NO.	DATE	DESCRIPTION
1	04/08/2022	FOR CONSTRUCTION

DATE	04/08/22
JOB NO.	3923.00
DRAWN	MLG
CHECKED	RFW/TJB

COPYRIGHT © 2022 - App Architecture, Inc.

TITLE
EXTERIOR DETAILS

SHEET NO.
A5.1

4/8/2022 5:04:14 PM

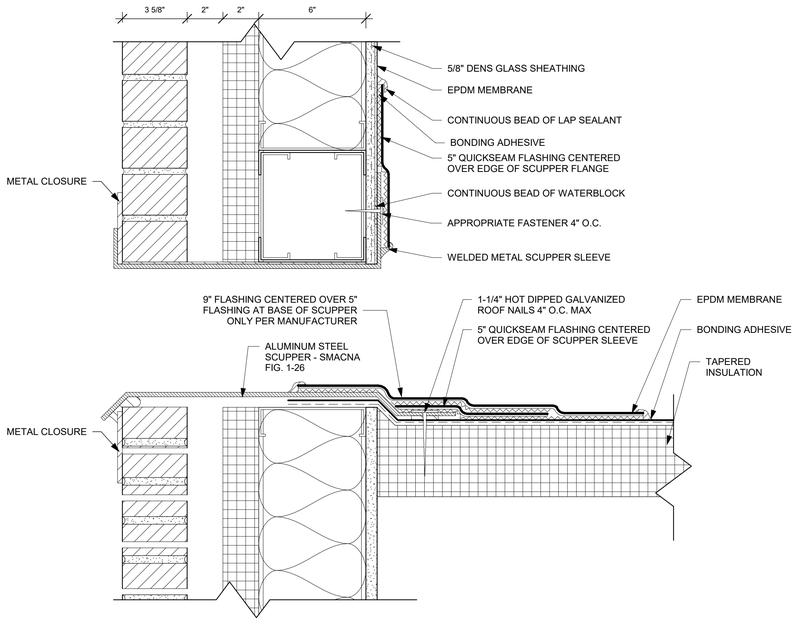

C1 THROUGH WALL SCUPPER DETAIL
3" = 1'-0"

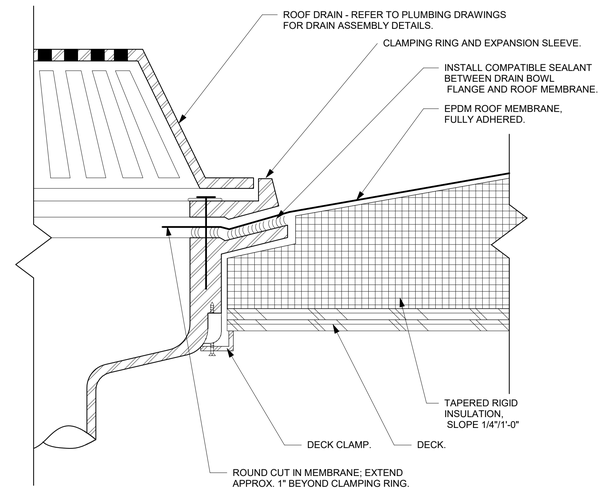

C3 ROOF DRAIN DETAIL
3" = 1'-0"

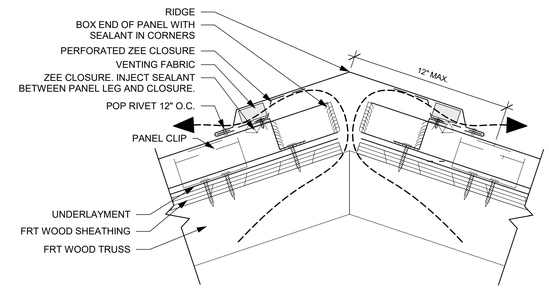

B5 VENTED RIDGE DETAIL
3" = 1'-0"

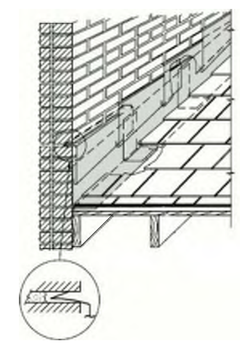

D5 STEP FLASHING - SMACNA - FIG 4-8A
1/2" = 1'-0"

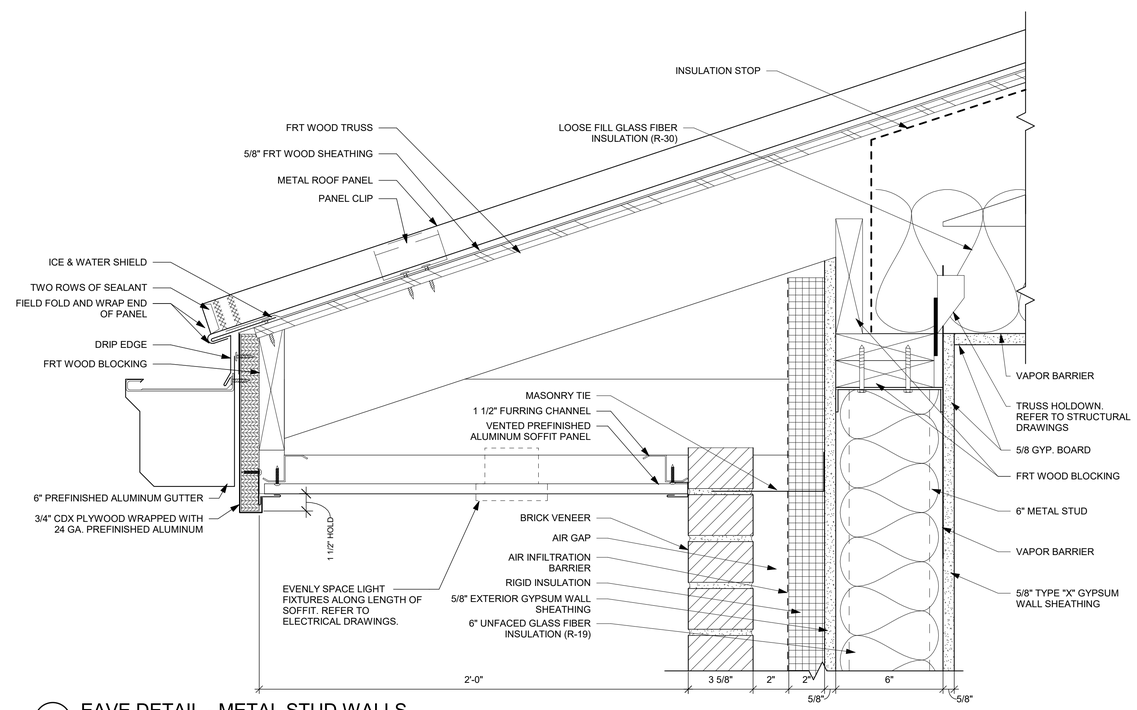

F1 EAVE DETAIL - METAL STUD WALLS
3" = 1'-0"

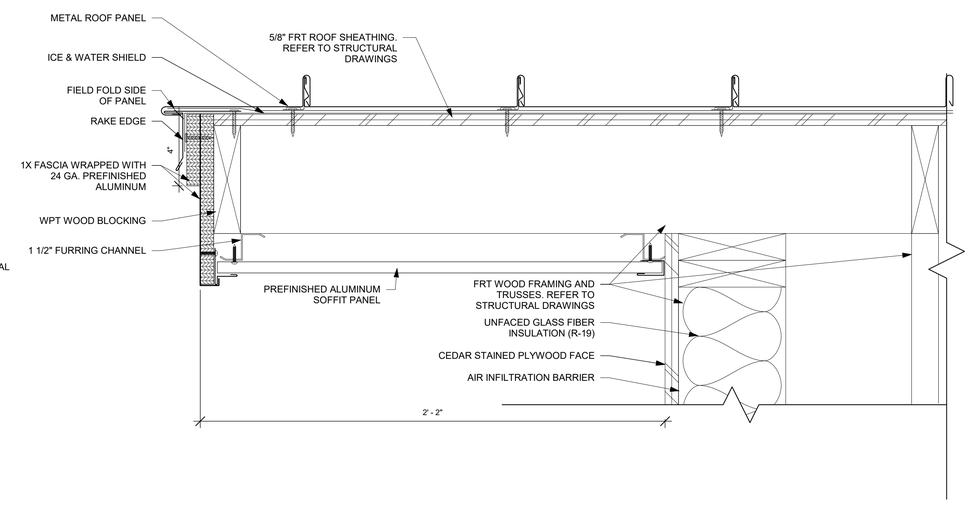

F5 RAKE DETAIL
3" = 1'-0"

App Architecture
creative focused design
615 Woodside Drive, Englewood, Ohio 45322
T 937.836.8898 F 937.832.3696
www.app-arch.com

STATE OF OHIO
TIMOTHY J. BEMENT
12305
REGISTERED ARCHITECT
Timothy J. Bement, License #12305
Expiration Date 12/31/2023

MIAMI COUNTY ONE STOP CENTER
BOARD OF COMMISSIONERS FOR MIAMI COUNTY, OHIO
BARNHART ROAD, TROY, OHIO 45373

ISSUE

NO.	DATE	DESCRIPTION
1	04/08/2022	FOR CONSTRUCTION

DATE	04/08/22
JOB NO.	3923.00
DRAWN	MLG
CHECKED	RFW/TJB

COPYRIGHT © 2022 - App Architecture, Inc.

TITLE
ROOF DETAILS

SHEET NO.
A5.2

4/8/2022 5:04:15 PM

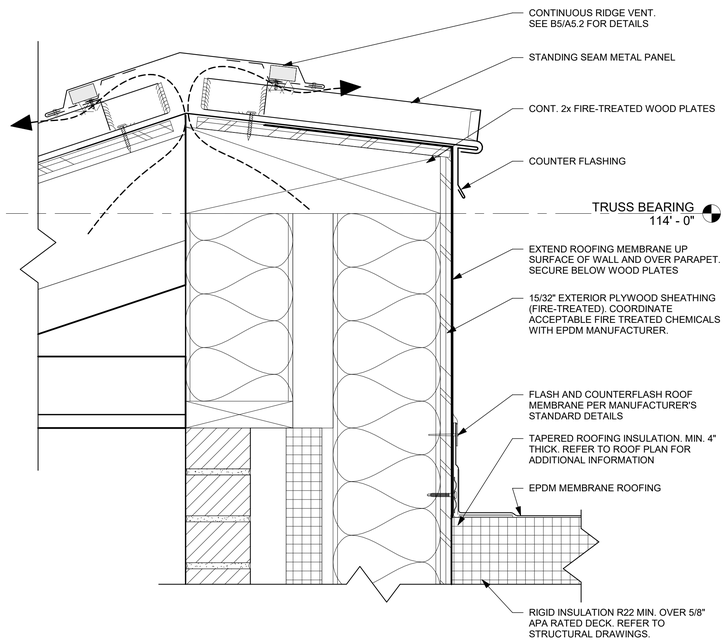

C1 PARAPET DETAIL
3" = 1'-0"

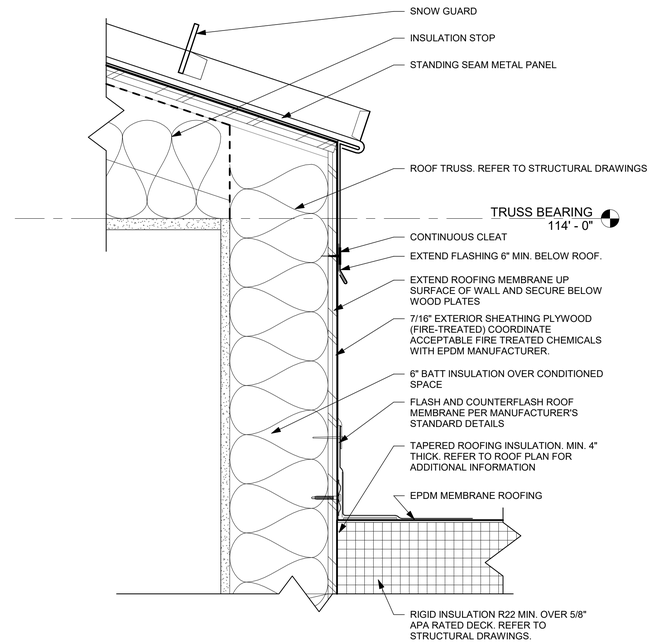

C4 LOW WALL OVER FLAT ROOF DETAIL
3" = 1'-0"

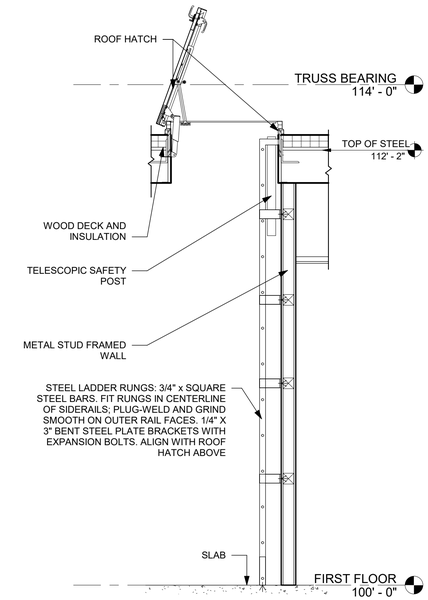

C6 ACCESS LADDER DETAIL
1/2" = 1'-0"

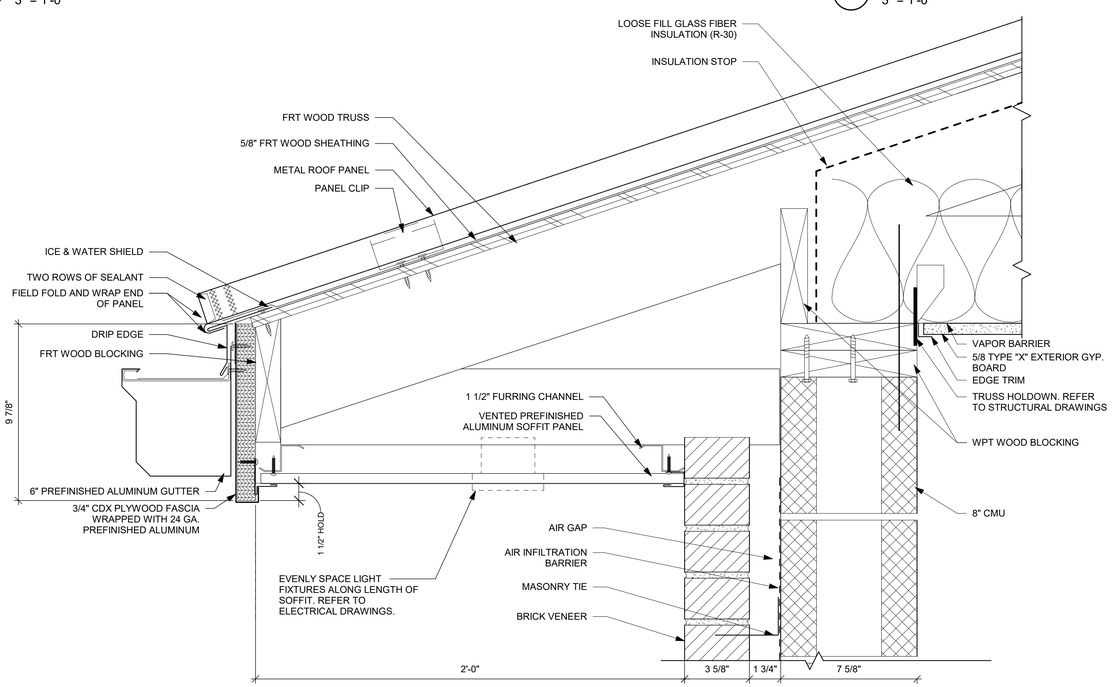

F1 EAVE DETAIL - CMU WALLS
3" = 1'-0"

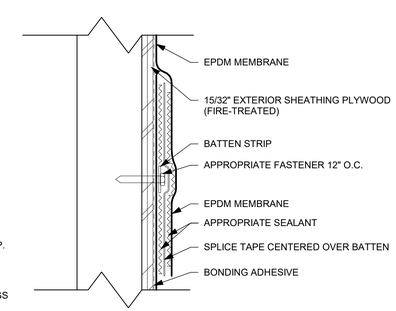

E5 INTERMEDIATE WALL FLASHING
3" = 1'-0"

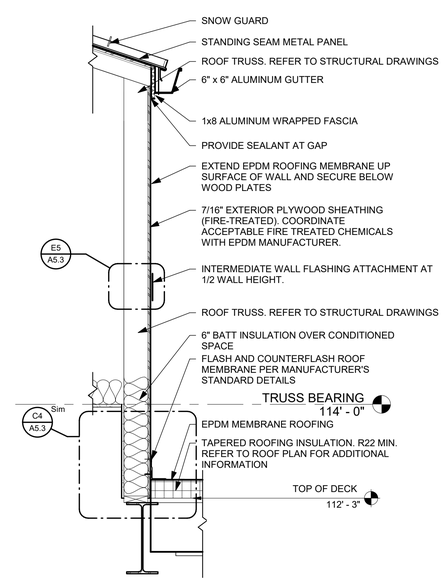

F6 WALL OVER FLAT ROOF
3/4" = 1'-0"

App Architecture
creative focused design
615 Woodside Drive, Englewood, Ohio 45322
T 937.836.8898 F 937.832.3696
www.app-arch.com

STATE OF OHIO
TIMOTHY J. BEMENT
12305
REGISTERED ARCHITECT
Timothy J. Bement, License #12305
Expiration Date 12/31/2023

MIAMI COUNTY ONE STOP CENTER
BOARD OF COMMISSIONERS FOR MIAMI COUNTY, OHIO
BARNHART ROAD, TROY, OHIO 45373

ISSUE

NO.	DATE	DESCRIPTION
1	04/08/2022	FOR CONSTRUCTION

DATE	04/08/22
JOB NO.	3923.00
DRAWN	MLG
CHECKED	RFW/TJB

COPYRIGHT © 2022 - App Architecture, Inc.

TITLE
ROOF DETAILS

SHEET NO.
A5.3

4/8/2022 5:04:17 PM

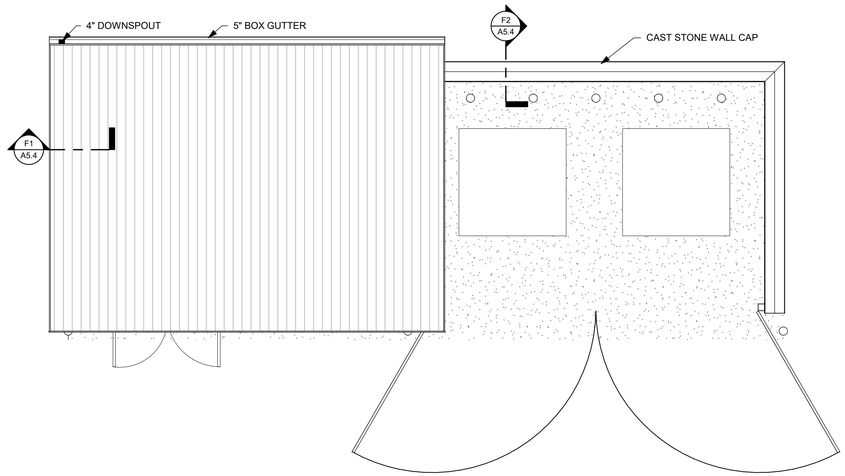

C2 DUMPSTER / SHED ROOF PLAN
1/4" = 1'-0"

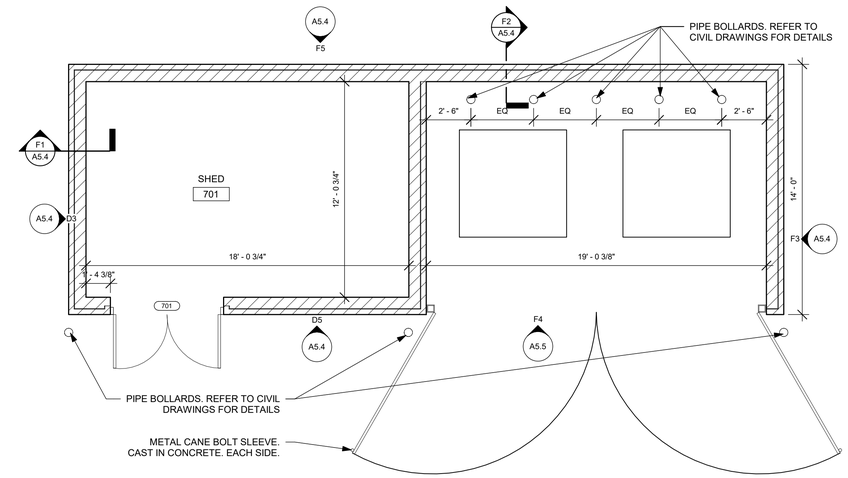

C5 DUMPSTER / SHED PLAN
1/4" = 1'-0"

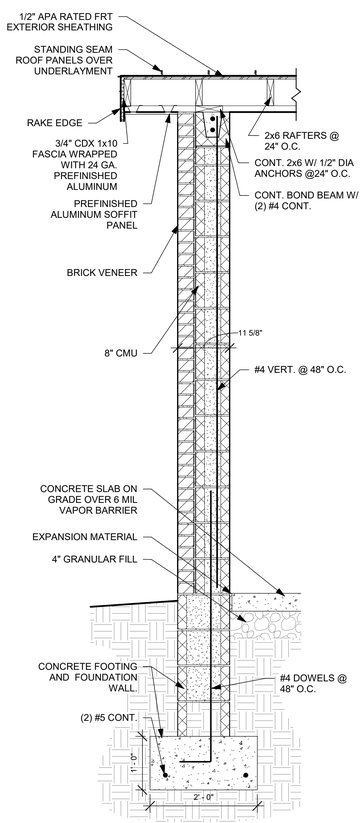

F1 SHED WALL SECTION
3/4" = 1'-0"

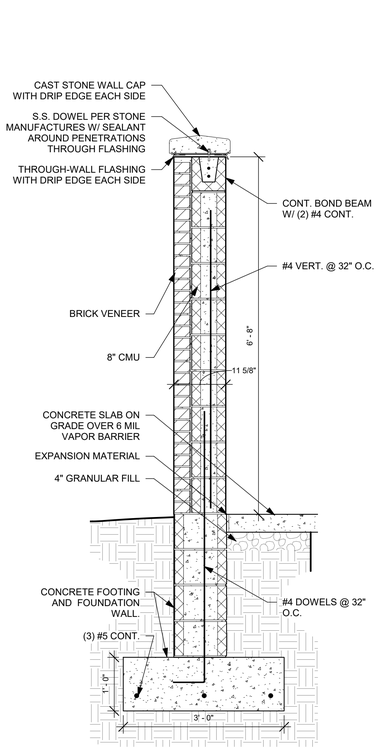

F2 DUMPSTER SCREEN WALL SECTION
3/4" = 1'-0"

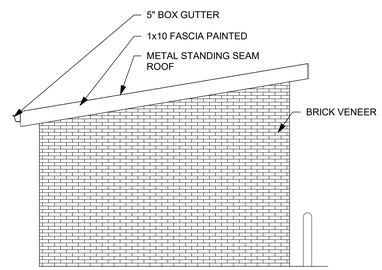

D3 SHED ELEVATION
1/4" = 1'-0"

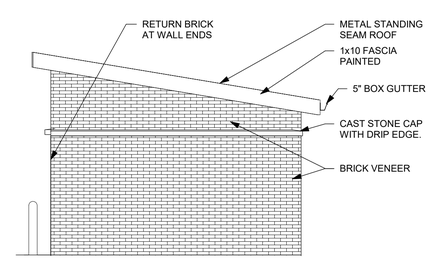

F3 DUMPSER SCREEN ELEVATION
1/4" = 1'-0"

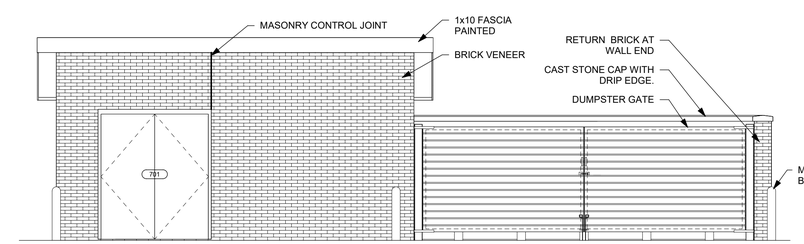

D5 FRONT ELEVATION
1/4" = 1'-0"

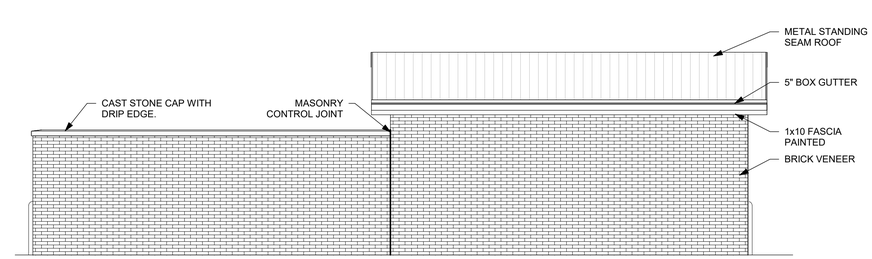

F5 REAR ELEVATION
1/4" = 1'-0"

App Architecture
creative focused design
615 Woodside Drive, Englewood, Ohio 45322
T 937.836.8898 F 937.832.3696
www.app-arch.com

STATE OF OHIO
TIMOTHY J. BEMENT
12305
REGISTERED ARCHITECT
Timothy J. Bement, License #12305
Expiration Date 12/31/2023

MIAMI COUNTY ONE STOP CENTER
BOARD OF COMMISSIONERS FOR MIAMI COUNTY, OHIO
BARNHART ROAD, TROY, OHIO 45373

ISSUE

NO.	DATE	DESCRIPTION
1	04/08/2022	FOR CONSTRUCTION

DATE	04/08/22
JOB NO.	3923.00
DRAWN	MLG
CHECKED	RFW/TJB

COPYRIGHT © 2022 - App Architecture, Inc.

TITLE
DUMPSTER AND SHED DETAILS

SHEET NO.
A5.4

4/8/2022 5:04:19 PM

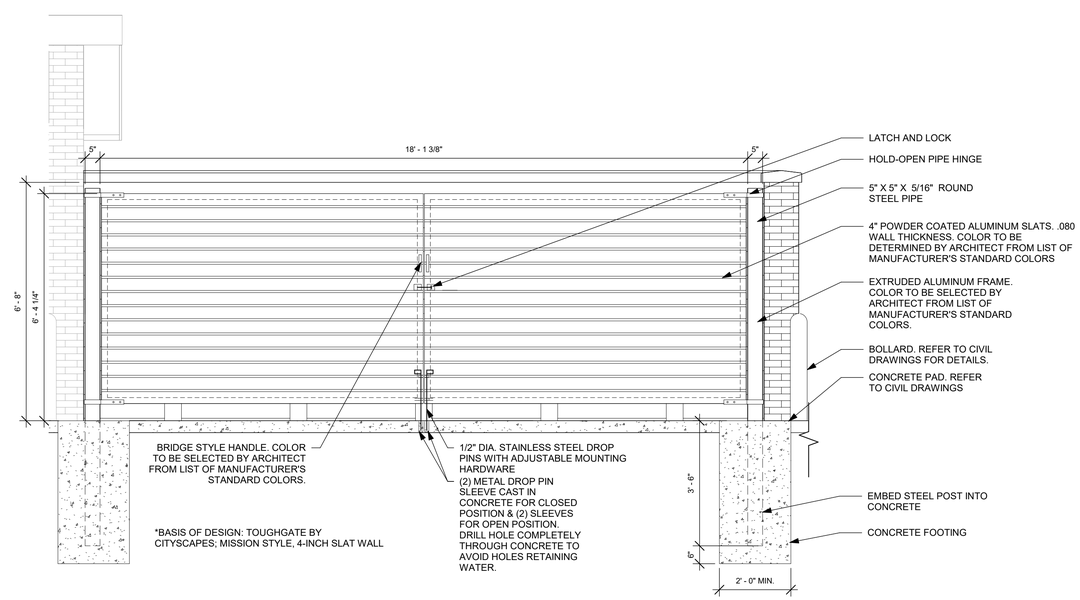

F4 DUMPSTER GATE DETAIL
1/2" = 1'-0"

App Architecture
creative focused design
615 Woodside Drive, Englewood, Ohio 45322
T 937.836.8898 F 937.832.3696
www.app-arch.com

STATE OF OHIO
TIMOTHY J. BEMENT
12305
REGISTERED ARCHITECT
Timothy J. Bement, License #12305
Expiration Date 12/31/2023

MIAMI COUNTY ONE STOP CENTER
BOARD OF COMMISSIONERS FOR MIAMI COUNTY, OHIO
BARNHART ROAD, TROY, OHIO 45373

ISSUE

NO.	DATE	DESCRIPTION
1	04/08/2022	FOR CONSTRUCTION

DATE	04/08/22
JOB NO.	3923.00
DRAWN	MLG
CHECKED	RFW/TJB

COPYRIGHT © 2022 - App Architecture, Inc.

TITLE
DUMPSTER GATE DETAILS

SHEET NO.
A5.5

4/8/2022 5:04:19 PM

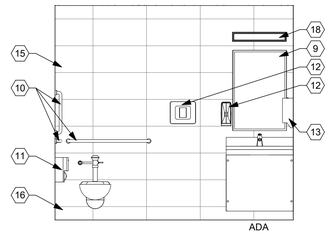

B1 102 SOUTH (LOBBY)
3/8" = 1'-0"

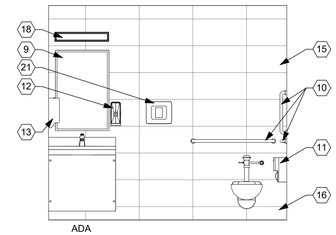

B2 103 NORTH (LOBBY)
3/8" = 1'-0"

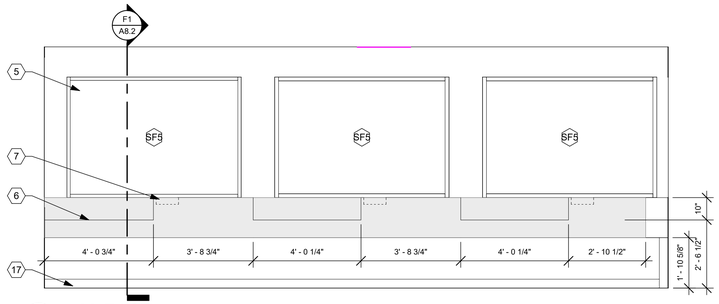

D1 500 EAST
3/8" = 1'-0"

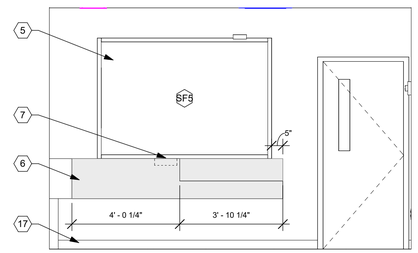

D3 500 SOUTH
3/8" = 1'-0"

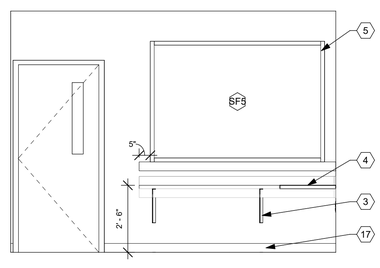

B3 501 NORTH
3/8" = 1'-0"

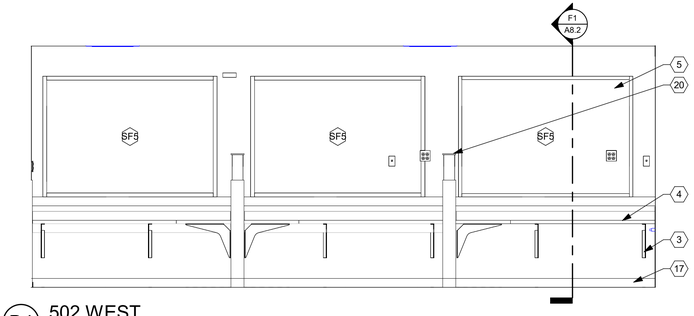

D4 502 WEST
3/8" = 1'-0"

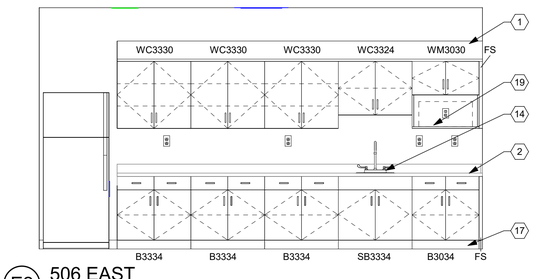

E2 506 EAST
3/8" = 1'-0"

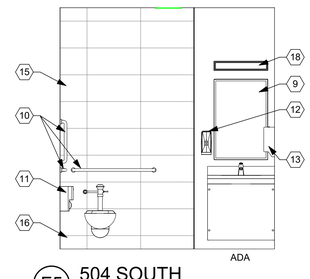

F5 504 SOUTH
3/8" = 1'-0"

CONSTRUCTION NOTES

⟨00⟩ INDICATES CONSTRUCTION NOTE.

1. PLASTIC LAMINATE (PL-1) SLOPED TOP. REFER TO A8.1 FOR DETAILS.
2. SOLID SURFACE (SSM-1) COUNTERTOP WITH 4" BACKSPLASH. REFER TO FINISH SCHEDULE.
3. METAL WORKTOP SUPPORT BRACKETS SPACED 4' - 0" O.C. MAX.
4. TYPICAL WORK SURFACE. REFER TO F1/A8.1 FOR DETAILS.
5. 1 1/4" BULLET RESISTANT WINDOW. REFER TO WINDOW SCHEDULE FOR DETAILS.
6. SOLID SURFACE (SSM-1) RECEPTION COUNTER WITH ACCESSIBLE COUNTER. REFER TO F1/A8.2 FOR DETAILS.
7. RECESSED PASS THROUGH TRAY. REFER TO F5/A8.2 FOR DETAILS.
8. REFRIGERATOR. OFCI.
9. 24" x 36" MIRROR.
10. ADA TOILET GRAB BARS. REFER TO SHEET A0.1 FOR SIZES AND MOUNTING AND CLEARANCE HEIGHTS.
11. TOILET TISSUE DISPENSER. OFCI.
12. SOAP DISPENSER. OFCI.
13. PAPER TOWEL DISPENSER. OFCI.
14. UNDERMOUNT STAINLESS STEEL SINK. REFER TO PLUMBING DRAWINGS.
15. PORCELAIN WALL TILE (PWT-1). REFER TO FINISH SCHEDULE A0.2.
16. PORCELAIN WALL TILE BASE (PWTB). REFER TO FINISH SCHEDULE A0.2.
17. 4" RUBBER BASE (RB-1) REFER TO FINISH SCHEDULE.
18. WALL MOUNT LIGHT FIXTURE. REFER TO ELECTRICAL DRAWINGS.
19. MICROWAVE SHELF. COORDINATE OUTLET LOCATION WITH ELECTRICAL DRAWINGS.
20. PARTITION WALL WITH 3/4" WOOD CAP.
21. HAND DRYER. XLERATOR: XL1-BW-ECO OR APPROVED EQUAL.

GENERAL NOTES

A. REFER TO ROOM FINISH SCHEDULE, MATERIAL LEGEND AND FINISHES PLANS FOR FINISH AND MATERIAL DETAILS.

B. ELECTRICAL INFORMATION SHOWN FOR REFERENCE ONLY. REFER TO ELECTRICAL PLANS FOR DETAILS.

C. PROVIDE WPT BLOCKING BEHIND ALL WALL HUNG ACCESSORIES, CABINETS, FURNISHINGS, HANDRAILS U.N.O.

D. REFER TO ELEVATIONS OF SHEET A0.1 FOR TOILET ROOM ACCESSORY MOUNTING HEIGHTS AND CLEARANCES.

E. "CG" INDICATES CORNER GUARD. REFER TO INTERIOR DETAILS FOR MORE INFORMATION.

F. ALL COUNTERTOPS AND WORK SURFACES TO HAVE BACK AND SIDE SPLASHES WHEREVER THE SURFACE ABUTS A WALL.

G. MATCHING SCRIBE STRIPS TO BE PROVIDED TO FILL ALL GAPS AND IRREGULARITIES WHERE THE EDGE OF CABINETS AND LOCKERS MEET WALLS. FILLER STRIPS ALSO TO BE PROVIDED AT CABINETRY AND LOCKERS CORNERS TO FILL ANY GAPS LEFT TO ALLOW DOORS AND DRAWERS TO FUNCTION PROPERLY.

H. DIMENSIONS ARE FROM FACE OF GYP. BD. TO FACE OF GYP. BD. U.N.O.

I. PROVIDE FINISHED END ON ALL EXPOSED SURFACES OF CASEWORK.

App Architecture
creative focused design
615 Woodside Drive, Englewood, Ohio 45322
T 937.836.8898 F 937.832.3696
www.app-arch.com

STATE OF OHIO
TIMOTHY J. BEMENT
12305
REGISTERED ARCHITECT
Timothy J. Bement, License #12305
Expiration Date 12/31/2023

MIAMI COUNTY ONE STOP CENTER
BOARD OF COMMISSIONERS FOR MIAMI COUNTY, OHIO
BARNHART ROAD, TROY, OHIO 45373

ISSUE

NO.	DATE	DESCRIPTION
1	04/08/2022	FOR CONSTRUCTION

DATE	04/08/22
JOB NO.	3923.00
DRAWN	MLG
CHECKED	RFW/TJB

COPYRIGHT © 2022 - App Architecture, Inc.

TITLE
INTERIOR ELEVATIONS - AUTO TITLE

SHEET NO.
A7.1

4/8/2022 5:04:23 PM

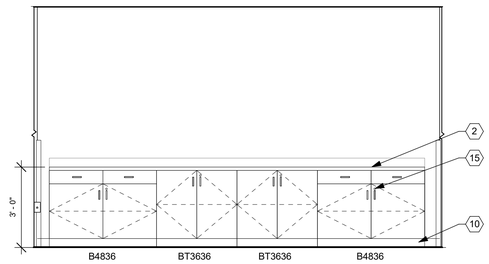

B1 201 WEST
3/8" = 1'-0"

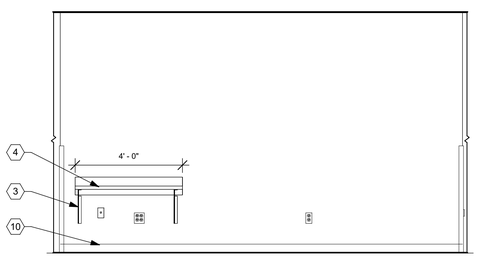

E1 202 EAST
3/8" = 1'-0"

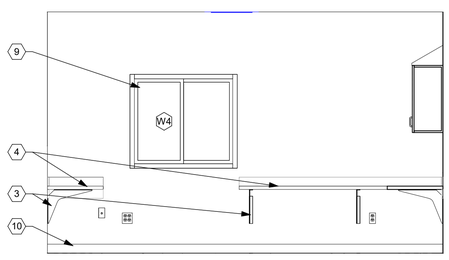

F1 202 WEST
3/8" = 1'-0"

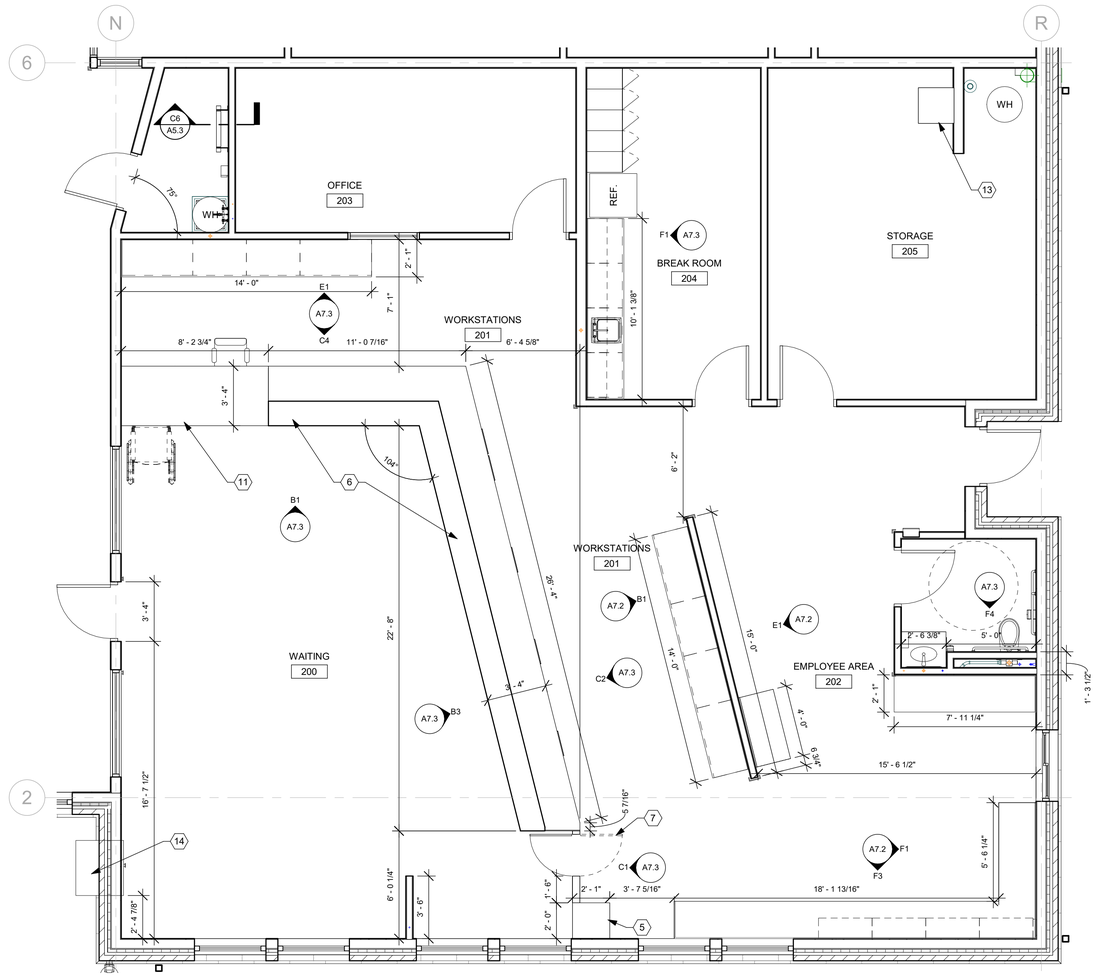

E3 BMV EXPANDED FLOOR PLAN
1/4" = 1'-0"

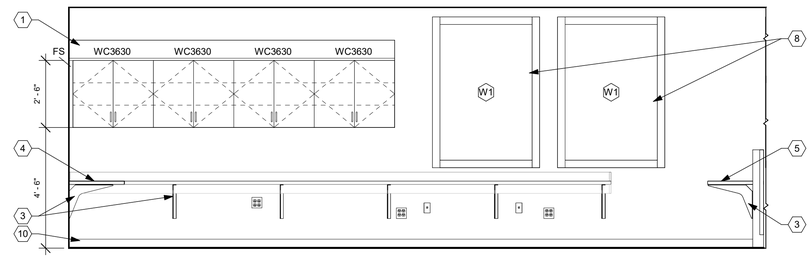

F3 202 NORTH
3/8" = 1'-0"

CONSTRUCTION NOTES

(00) INDICATES CONSTRUCTION NOTE.

1. PLASTIC LAMINATE (PL-1) SLOPED TOP. REFER TO A8.1 FOR DETAILS.
2. PLASTIC LAMINATE (PL-3) COUNTERTOP WITH 4" BACKSPLASH. REFER TO FINISH SCHEDULE.
3. METAL WORKTOP SUPPORT BRACKETS SPACED 4' - 0" O.C. MAX.
4. TYPICAL WORK SURFACE. REFER TO F1/A8.1 FOR DETAILS.
5. PLASTIC LAMINATE (PL-3) COUNTERTOP FOR PHOTOGRAPHY EQUIPMENT.
6. BMV STAND UP WORKSTATION. REFER TO SHEET A8.3 FOR DETAILS.
7. SELF CLOSING GATE DOOR. REFER TO DOOR SCHEDULE.
8. ALUMINUM FIXED WINDOW. REFER TO WINDOW SCHEDULE.
9. ALUMINUM SLIDING WINDOW. REFER TO WINDOW SCHEDULE.
10. 4" RUBBER (RB-1) BASE REFER TO FINISH SCHEDULE.
11. BMV ADA WORKSTATION. REFER TO SHEET A8.3 FOR DETAILS.
12. ROOF ACCESS LADDER.
13. DATA TOWER. COORDINATE WITH IT.
14. EXTERIOR KIOSK WITH MAINTENANCE ACCESS FROM INTERIOR. SUPPLIED BY OWNER.
15. KEYED LOCK AT EACH SET OF DOORS.

GENERAL NOTES

A. REFER TO ROOM FINISH SCHEDULE, MATERIAL LEGEND AND FINISHES PLANS FOR FINISH AND MATERIAL DETAILS.

B. ELECTRICAL INFORMATION SHOWN FOR REFERENCE ONLY. REFER TO ELECTRICAL PLANS FOR DETAILS.

C. PROVIDE WPT BLOCKING BEHIND ALL WALL HUNG ACCESSORIES, CABINETS, FURNISHINGS, HANDRAILS U.N.O.

D. REFER TO ELEVATIONS OF SHEET A0.1 FOR TOILET ROOM ACCESSORY MOUNTING HEIGHTS AND CLEARANCES.

E. "CG" INDICATES CORNER GUARD. REFER TO INTERIOR DETAILS FOR MORE INFORMATION.

F. ALL COUNTERTOPS AND WORK SURFACES TO HAVE BACK AND SIDE SPLASHES WHEREVER THE SURFACE ABUTS A WALL.

G. MATCHING SCRIBE STRIPS TO BE PROVIDED TO FILL ALL GAPS AND IRREGULARITIES WHERE THE EDGE OF CABINETS AND LOCKERS MEET WALLS. FILLER STRIPS ALSO TO BE PROVIDED AT CABINETRY AND LOCKERS CORNERS TO FILL ANY GAPS LEFT TO ALLOW DOORS AND DRAWERS TO FUNCTION PROPERLY.

H. DIMENSIONS ARE FROM FACE OF GYP. BD. TO FACE OF GYP. BD. U.N.O.

I. PROVIDE FINISHED END ON ALL EXPOSED SURFACES OF CASEWORK.

App Architecture
creative focused design
615 Woodside Drive, Englewood, Ohio 45322
T 937.836.8898 F 937.832.3696
www.app-arch.com

STATE OF OHIO
TIMOTHY J. BEMENT
12305
REGISTERED ARCHITECT
Timothy J. Bement, License #12305
Expiration Date 12/31/2023

MIAMI COUNTY ONE STOP CENTER
BOARD OF COMMISSIONERS FOR MIAMI COUNTY, OHIO
BARNHART ROAD, TROY, OHIO 45373

ISSUE

NO.	DATE	DESCRIPTION
1	04/08/2022	FOR CONSTRUCTION

DATE	04/08/22
JOB NO.	3923.00
DRAWN	MLG
CHECKED	RFW/TJB

COPYRIGHT © 2022 - App Architecture, Inc.

TITLE
INTERIOR ELEVATIONS - BMV

SHEET NO.
A7.2

4/8/2022 5:04:25 PM

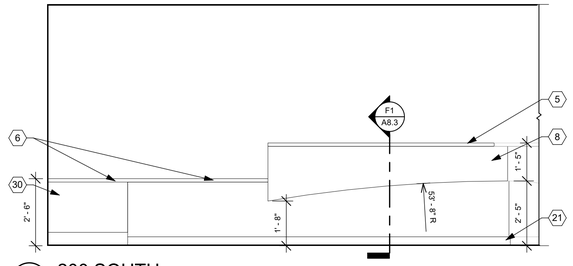

B1 200 SOUTH
3/8" = 1'-0"

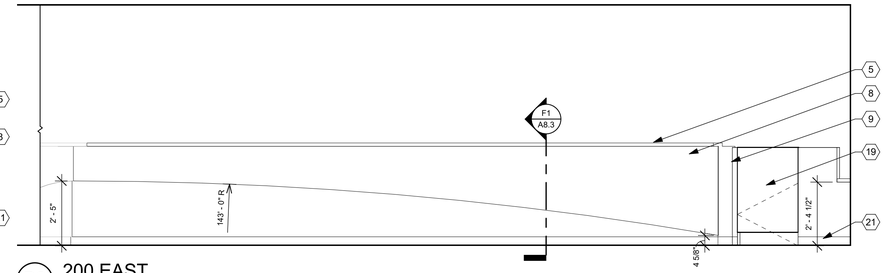

B3 200 EAST
3/8" = 1'-0"

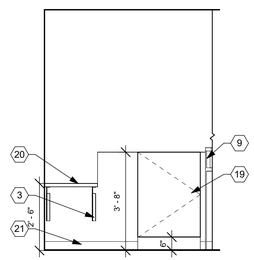

C1 201 EAST - 2
3/8" = 1'-0"

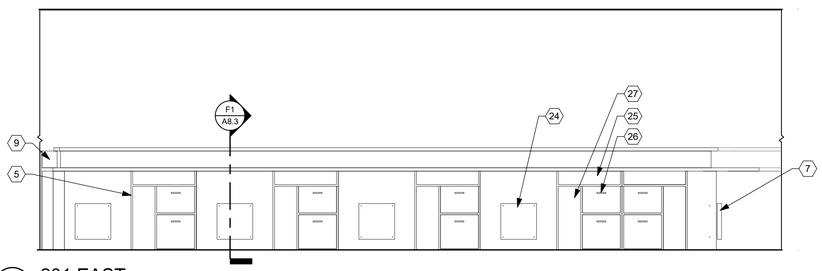

C2 201 EAST
3/8" = 1'-0"

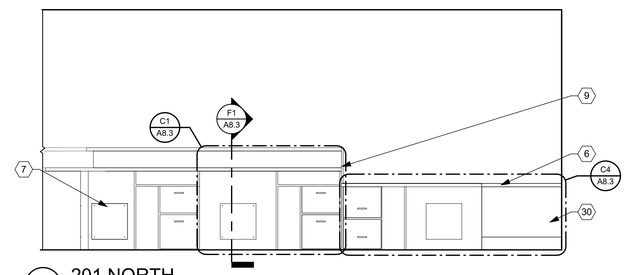

C4 201 NORTH
3/8" = 1'-0"

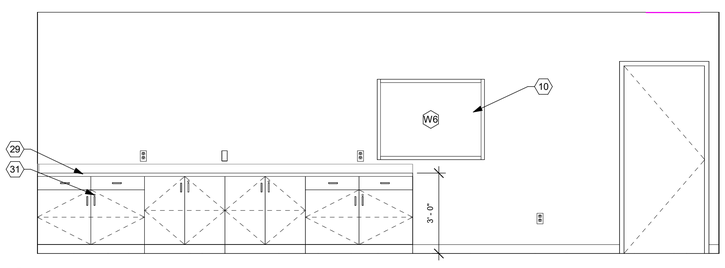

E1 201 SOUTH
3/8" = 1'-0"

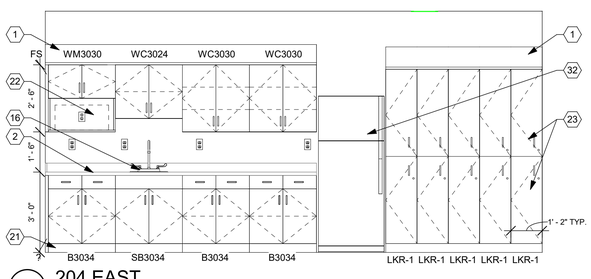

F1 204 EAST
3/8" = 1'-0"

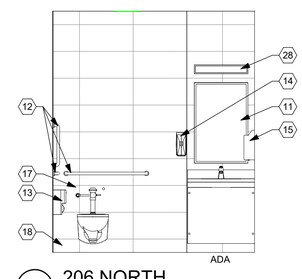

F4 206 NORTH
3/8" = 1'-0"

CONSTRUCTION NOTES

(00) INDICATES CONSTRUCTION NOTE.

1. PLASTIC LAMINATE (PL-1) SLOPED TOP. REFER TO A8.1 FOR DETAILS.
2. SOLID SURFACE (SSM-1) COUNTERTOP WITH 4" BACKSPLASH. REFER TO FINISH SCHEDULE.
3. METAL WORKTOP SUPPORT BRACKETS SPACED 4' - 0" O.C. MAX.
4. TYPICAL WORK SURFACE. REFER TO F1/A8.1 FOR DETAILS.
5. BMV WORKSTATION. REFER TO SHEET A8.3 FOR DETAILS.
6. ADA SEGMENT OF BMV WORKSTATION. REFER TO C4/A8.3.
7. SHARED ACCESS PANEL FOR WORKSTATIONS AT CORNERS.
8. DECORATIVE PLASTIC LAMINATE (PL-2) PANEL ON CUSTOMER SIDE OF WORKSTATION.
9. PLASTIC LAMINATE (PL-1) END PANEL.
10. ALUMINUM FIXED WINDOW. WITH ONE WAY VIEWING GLASS. REFER TO WINDOW SCHEDULE.
11. 24" x 36" MIRROR.
12. ADA TOILET GRAB BARS. REFER TO SHEET A0.1 FOR MOUNTING AND CLEARANCE HEIGHTS.
13. TOILET TISSUE DISPENSER. OFCI.
14. SOAP DISPENSER. OFCI.
15. PAPER TOWEL DISPENSER. OFCI.
16. UNDERMOUNT STAINLESS STEEL SINK WITH GARBAGE DISPOSAL. REFER TO PLUMBING DRAWINGS.
17. PORCELAIN WALL TILE (PWT-1). REFER TO FINISH SCHEDULE A0.2.
18. PORCELAIN WALL TILE BASE (PWTB). REFER TO FINISH SCHEDULE A0.2.
19. SELF CLOSING GATE DOOR. REFER TO DOOR SCHEDULE.
20. PLASTIC LAMINATE COUNTERTOP FOR PHOTOGRAPHY EQUIPMENT.
21. 4" RUBBER BASE (RB-1) REFER TO FINISH SCHEDULE.
22. MICROWAVE SHELF. COORDINATE OUTLET LOCATION WITH ELECTRICAL DRAWINGS.
23. EMPLOYEE LOCKERS.
24. ACCESS PANELS.
25. OPEINING FOR CASH BOX.
26. FILE CABINET DRAWERS.
27. OPENING FOR CPU.
28. WALL MOUNT LIGHT FIXTURE. REFER TO ELECTRICAL DRAWINGS.
29. PLASTIC LAMINATE (PL-3) COUNTERTOP WITH 4" BACKSPLASH. REFER TO FINISH SCHEDULE.
30. PLASTIC LAMINATE (PL-2) MODESTY PANEL. REFER TO C4/A8.3.
31. KEYED LOCK AT EACH SET OF DOORS.
32. REFIGERATOR. OFCI.

GENERAL NOTES

A. REFER TO ROOM FINISH SCHEDULE, MATERIAL LEGEND AND FINISHES PLANS FOR FINISH AND MATERIAL DETAILS.

B. ELECTRICAL INFORMATION SHOWN FOR REFERENCE ONLY. REFER TO ELECTRICAL PLANS FOR DETAILS.

C. PROVIDE WPT BLOCKING BEHIND ALL WALL HUNG ACCESSORIES, CABINETS, FURNISHINGS, HANDRAILS U.N.O.

D. REFER TO ELEVATIONS OF SHEET A0.1 FOR TOILET ROOM ACCESSORY MOUNTING HEIGHTS AND CLEARANCES.

E. "CG" INDICATES CORNER GUARD. REFER TO INTERIOR DETAILS FOR MORE INFORMATION.

F. ALL COUNTERTOPS AND WORK SURFACES TO HAVE BACK AND SIDE SPLASHES WHEREVER THE SURFACE ABUTS A WALL.

G. MATCHING SCRIBE STRIPS TO BE PROVIDED TO FILL ALL GAPS AND IRREGULARITIES WHERE THE EDGE OF CABINETS AND LOCKERS MEET WALLS. FILLER STRIPS ALSO TO BE PROVIDED AT CABINETRY AND LOCKERS CORNERS TO FILL ANY GAPS LEFT TO ALLOW DOORS AND DRAWERS TO FUNCTION PROPERLY.

H. DIMENSIONS ARE FROM FACE OF GYP. BD. TO FACE OF GYP. BD. U.N.O.

I. PROVIDE FINISHED END ON ALL EXPOSED SURFACES OF CASEWORK.

App Architecture
creative focused design
615 Woodside Drive, Englewood, Ohio 45322
T 937.836.8898 F 937.832.3696
www.app-arch.com

STATE OF OHIO
TIMOTHY J. BEMENT
12305
REGISTERED ARCHITECT
Timothy J. Bement, License #12305
Expiration Date 12/31/2023

MIAMI COUNTY ONE STOP CENTER
BOARD OF COMMISSIONERS FOR MIAMI COUNTY, OHIO
BARNHART ROAD, TROY, OHIO 45373

ISSUE

NO.	DATE	DESCRIPTION
1	04/08/2022	FOR CONSTRUCTION

DATE	04/08/22
JOB NO.	3923.00
DRAWN	MLG
CHECKED	RFW/TJB

COPYRIGHT © 2022 - App Architecture, Inc.

TITLE
INTERIOR ELEVATIONS - BMV

SHEET NO.
A7.3

4/8/2022 5:04:27 PM

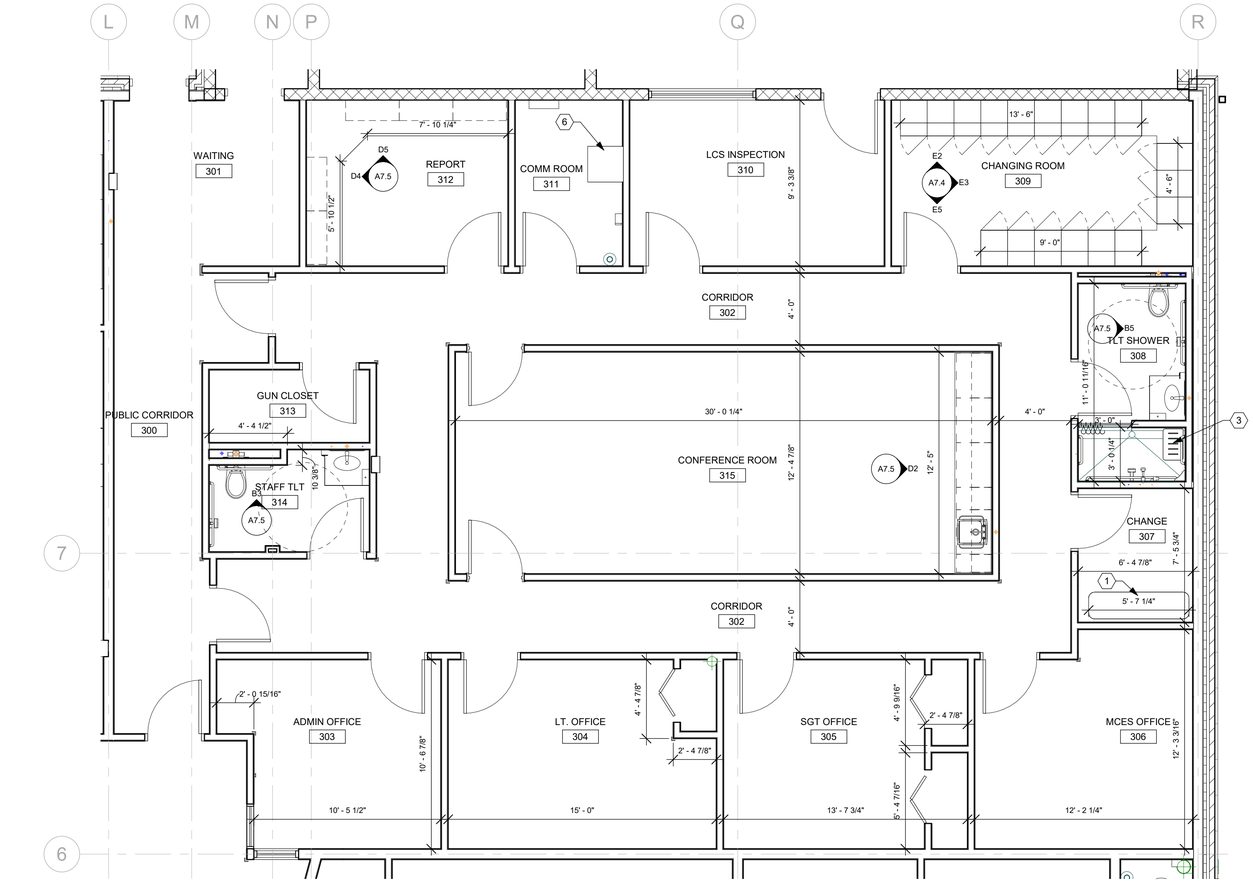

D2 OSP ENLARGED PLAN
1/4" = 1'-0"

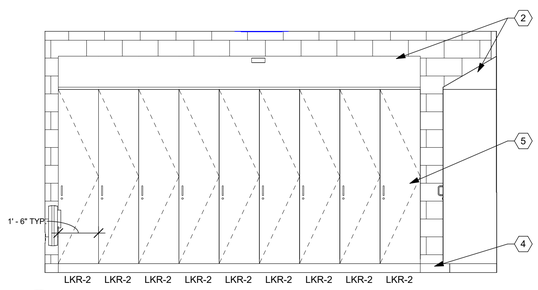

E2 309 SOUTH
3/8" = 1'-0"

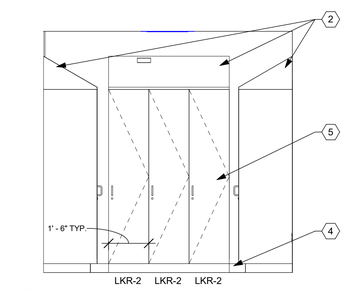

E3 309 WEST
3/8" = 1'-0"

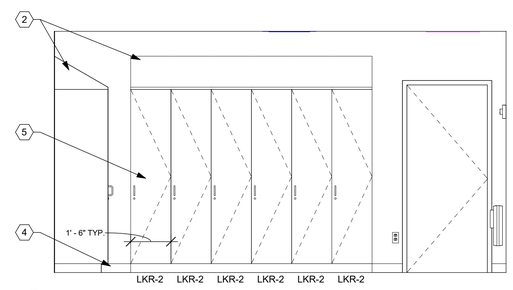

E5 309 NORTH
3/8" = 1'-0"

CONSTRUCTION NOTES

(00) INDICATES CONSTRUCTION NOTE.

1. BELSON MODEL 942SM-P6 STEEL FLAT BENCH WITH PERFORATED PATTERN STEEL OR APPROVED EQUAL.
2. PLASTIC LAMINATE (PL-1) SLOPED TOP. REFER TO A8.1 FOR DETAILS.
3. SERENASEAT BAMBOO FOLD DOWN SHOWER SEAT. MODEL INV-WS19-BN (X2) OR EQUAL.
4. 4" RUBBER BASE (RB-1) REFER TO FINISH SCHEDULE.
5. FULL HEIGHT LOCKERS.
6. DATA TOWER. COORDINATE WITH IT.

GENERAL NOTES

A. REFER TO ROOM FINISH SCHEDULE, MATERIAL LEGEND AND FINISHES PLANS FOR FINISH AND MATERIAL DETAILS.

B. ELECTRICAL INFORMATION SHOWN FOR REFERENCE ONLY. REFER TO ELECTRICAL PLANS FOR DETAILS.

C. PROVIDE WPT BLOCKING BEHIND ALL WALL HUNG ACCESSORIES, CABINETS, FURNISHINGS, HANDRAILS U.N.O.

D. REFER TO ELEVATIONS OF SHEET A0.1 FOR TOILET ROOM ACCESSORY MOUNTING HEIGHTS AND CLEARANCES.

E. "CG" INDICATES CORNER GUARD. REFER TO INTERIOR DETAILS FOR MORE INFORMATION.

F. ALL COUNTERTOPS AND WORK SURFACES TO HAVE BACK AND SIDE SPLASHES WHEREVER THE SURFACE ABUTS A WALL.

G. MATCHING SCRIBE STRIPS TO BE PROVIDED TO FILL ALL GAPS AND IRREGULARITIES WHERE THE EDGE OF CABINETS AND LOCKERS MEET WALLS. FILLER STRIPS ALSO TO BE PROVIDED AT CABINETRY AND LOCKERS CORNERS TO FILL ANY GAPS LEFT TO ALLOW DOORS AND DRAWERS TO FUNCTION PROPERLY.

H. DIMENSIONS ARE FROM FACE OF GYP. BD. TO FACE OF GYP. BD. U.N.O.

I. PROVIDE FINISHED END ON ALL EXPOSED SURFACES OF CASEWORK.

App Architecture
creative focused design
615 Woodside Drive, Englewood, Ohio 45322
T 937.836.8898 F 937.832.3696
www.app-arch.com

STATE OF OHIO
TIMOTHY J. BEMENT
12305
REGISTERED ARCHITECT
Timothy J. Bement, License #12305
Expiration Date 12/31/2023

MIAMI COUNTY ONE STOP CENTER
BOARD OF COMMISSIONERS FOR MIAMI COUNTY, OHIO
BARNHART ROAD, TROY, OHIO 45373

ISSUE

NO.	DATE	DESCRIPTION
1	04/08/2022	FOR CONSTRUCTION

DATE	04/08/22
JOB NO.	3923.00
DRAWN	MLG
CHECKED	RFW/TJB

COPYRIGHT © 2022 - App Architecture, Inc.

TITLE
INTERIOR ELEVATIONS - OSP

SHEET NO.
A7.4

4/8/2022 5:04:29 PM

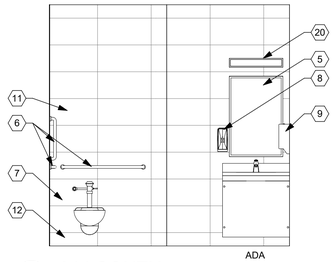

B3 314 SOUTH
3/8" = 1'-0"

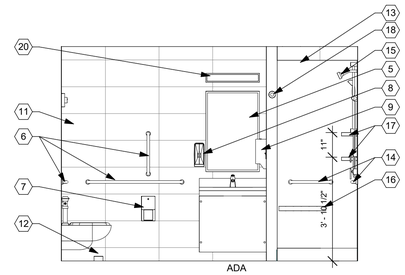

B5 308 WEST
3/8" = 1'-0"

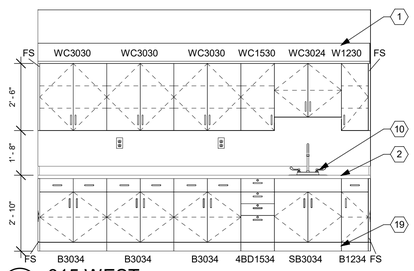

D2 315 WEST
3/8" = 1'-0"

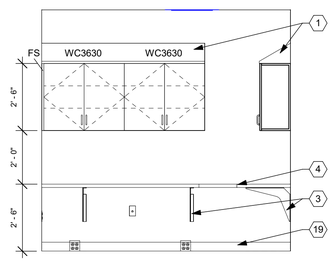

D4 312 EAST
3/8" = 1'-0"

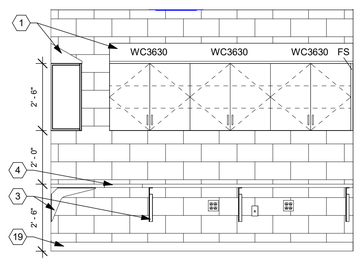

D5 312 SOUTH
3/8" = 1'-0"

CONSTRUCTION NOTES

(00) INDICATES CONSTRUCTION NOTE.

1. PLASTIC LAMINATE (PL-1) SLOPED TOP. REFER TO A8.1 FOR DETAILS.
2. SOLID SURFACE (SSM-1) COUNTERTOP WITH 4" BACKSPLASH. REFER TO FINISH SCHEDULE.
3. METAL WORKTOP SUPPORT BRACKETS SPACED 4' - 0" O.C. MAX.
4. TYPICAL WORK SURFACE. REFER TO F1/A8.1 FOR DETAILS.
5. 24" x 36" MIRROR.
6. ADA TOILET GRAB BARS. REFER TO SHEET A0.1 FOR MOUNTING AND CLEARANCE HEIGHTS.
7. TOILET TISSUE DISPENSER. OFCI.
8. SOAP DISPENSER. OFCI.
9. PAPER TOWEL DISPENSER. OFCI.
10. UNDERMOUNT STAINLESS STEEL SINK WITH GARBAGE DISPOSAL. REFER TO PLUMBING DRAWINGS.
11. PORCELAIN WALL TILE (PWT-1). REFER TO FINISH SCHEDULE A0.2.
12. PORCELAIN WALL TILE BASE (PWTB). REFER TO FINISH SCHEDULE A0.2.
13. SHOWER WITH TRENCH DRAIN. REFER TO B5/A0.6 FOR DETAILS.
14. ADA GRAB BARS FOR SHOWER (2) 18" AND, (1) 5' - 0". REFER TO A0.1 FOR MOUNTING AND CLEARANCE STANDARDS.
15. SHOWER HEAD. REFER TO PLUMBING DRAWINGS.
16. SHOWER SEAT.
17. SOAP DISH, 3' - 10" A.F.F. AND 4' - 10" A.F.F.
18. CURTAIN ROD.
19. 4" RUBBER BASE (RB-1) REFER TO FINISH SCHEDULE.
20. WALL MOUNT LIGHT FIXTURE. REFER TO ELECTRICAL DRAWINGS.

GENERAL NOTES

A. REFER TO ROOM FINISH SCHEDULE, MATERIAL LEGEND AND FINISHES PLANS FOR FINISH AND MATERIAL DETAILS.

B. ELECTRICAL INFORMATION SHOWN FOR REFERENCE ONLY. REFER TO ELECTRICAL PLANS FOR DETAILS.

C. PROVIDE WPT BLOCKING BEHIND ALL WALL HUNG ACCESSORIES, CABINETS, FURNISHINGS, HANDRAILS U.N.O.

D. REFER TO ELEVATIONS OF SHEET A0.1 FOR TOILET ROOM ACCESSORY MOUNTING HEIGHTS AND CLEARANCES.

E. "CG" INDICATES CORNER GUARD. REFER TO INTERIOR DETAILS FOR MORE INFORMATION.

F. ALL COUNTERTOPS AND WORK SURFACES TO HAVE BACK AND SIDE SPLASHES WHEREVER THE SURFACE ABUTS A WALL.

G. MATCHING SCRIBE STRIPS TO BE PROVIDED TO FILL ALL GAPS AND IRREGULARITIES WHERE THE EDGE OF CABINETS AND LOCKERS MEET WALLS. FILLER STRIPS ALSO TO BE PROVIDED AT CABINETRY AND LOCKERS CORNERS TO FILL ANY GAPS LEFT TO ALLOW DOORS AND DRAWERS TO FUNCTION PROPERLY.

H. DIMENSIONS ARE FROM FACE OF GYP. BD. TO FACE OF GYP. BD. U.N.O.

I. PROVIDE FINISHED END ON ALL EXPOSED SURFACES OF CASEWORK.

App Architecture
creative focused design
615 Woodside Drive, Englewood, Ohio 45322
T 937.836.8898 F 937.832.3696
www.app-arch.com

STATE OF OHIO
TIMOTHY J. BEMENT
12305
REGISTERED ARCHITECT
Timothy J. Bement, License #12305
Expiration Date 12/31/2023

MIAMI COUNTY ONE STOP CENTER
BOARD OF COMMISSIONERS FOR MIAMI COUNTY, OHIO
BARNHART ROAD, TROY, OHIO 45373

ISSUE

NO.	DATE	DESCRIPTION
1	04/08/2022	FOR CONSTRUCTION

DATE	04/08/22
JOB NO.	3923.00
DRAWN	MLG
CHECKED	RFW/TJB

COPYRIGHT © 2022 - App Architecture, Inc.

TITLE
INTERIOR ELEVATIONS - OSP

SHEET NO.
A7.5

4/8/2022 5:04:31 PM

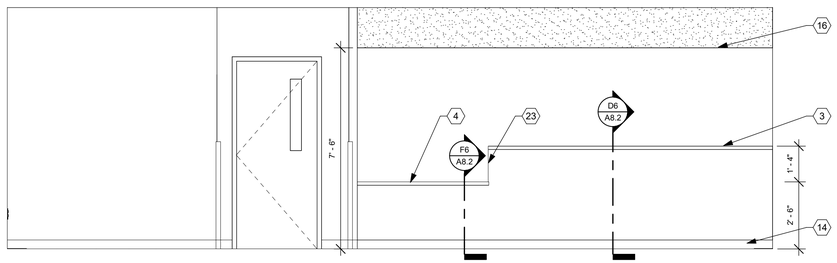

B1 400 SOUTH
3/8" = 1'-0"

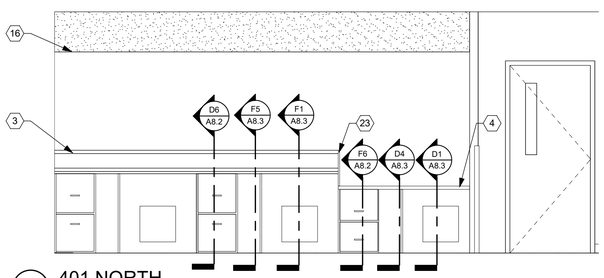

D1 401 NORTH
3/8" = 1'-0"

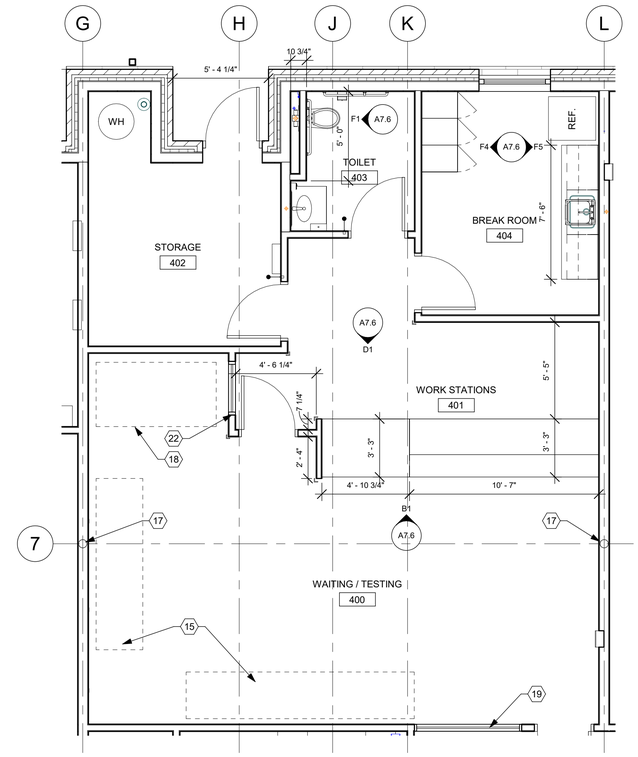

D4 DRIVERS EXAM ENLARGED FLOOR PLAN
1/4" = 1'-0"

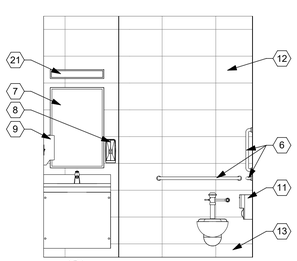

F1 403 EAST
3/8" = 1'-0"

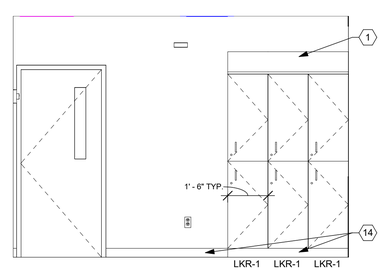

F4 404 EAST
3/8" = 1'-0"

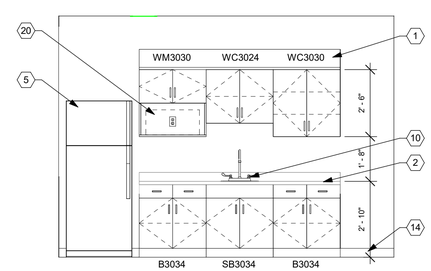

F5 404 WEST
3/8" = 1'-0"

CONSTRUCTION NOTES

⟨00⟩ INDICATES CONSTRUCTION NOTE.

1. PLASTIC LAMINATE (PL-1) SLOPED TOP. REFER TO A8.1 FOR DETAILS.
2. SOLID SURFACE (SSM-1) COUNTERTOP WITH 4" BACKSPLASH. REFER TO FINISH SCHEDULE.
3. (2) DRIVERS EXAM WORKSTATIONS. REFER TO D6/A8.2.
4. (1) ADA SECTION OF DRIVERS EXAM WORKSTATION. REFER TO F6/A8.2.
5. REFRIGERATOR OFCI.
6. ADA TOILET GRAB BARS. REFER TO SHEET A0.1 FOR MOUNTING AND CLEARANCE HEIGHTS.
7. 24" x 36" MIRROR.
8. SOAP DISPENSER. OFCI.
9. PAPER TOWEL DISPENSER. OFCI.
10. UNDERMOUNT STAINLESS STEEL SINK WITH GARBAGE DISPOSAL. REFER TO PLUMBING DRAWINGS.
11. TOILET TISSUE DISPENSER. OFCI.
12. PORCELAIN WALL TILE (PWT-1). REFER TO FINISH SCHEDULE A0.2.
13. PORCELAIN WALL TILE BASE (PWTB). REFER TO FINISH SCHEDULE A0.2.
14. 4" RUBBER BASE (RB-1) REFER TO FINISH SCHEDULE.
15. RELOCATED DRIVERS LICENSE TESTING CENTERS.
16. DRYWALL SOFFIT 7' - 6" A.F.F.
17. FRAME WALL AROUND COLUMN.
18. RELOCATED SIMULATOR.
19. WINDOW INTO LOBBY.
20. MICROWAVE SHELF. COORDINATE OUTLET LOCATION WITH ELECTRICAL DRAWINGS.
21. WALL MOUNT LIGHT FIXTURE. REFER TO ELECTRICAL DRAWINGS.
22. WINDOW FOR SIMULATOR OBSERVATION.
23. PLASTIC LAMINATE (PL-2) END PANEL.

GENERAL NOTES

A. REFER TO ROOM FINISH SCHEDULE, MATERIAL LEGEND AND FINISHES PLANS FOR FINISH AND MATERIAL DETAILS.

B. ELECTRICAL INFORMATION SHOWN FOR REFERENCE ONLY. REFER TO ELECTRICAL PLANS FOR DETAILS.

C. PROVIDE WPT BLOCKING BEHIND ALL WALL HUNG ACCESSORIES, CABINETS, FURNISHINGS, HANDRAILS U.N.O.

D. REFER TO ELEVATIONS OF SHEET A0.1 FOR TOILET ROOM ACCESSORY MOUNTING HEIGHTS AND CLEARANCES.

E. "CG" INDICATES CORNER GUARD. REFER TO INTERIOR DETAILS FOR MORE INFORMATION.

F. ALL COUNTERTOPS AND WORK SURFACES TO HAVE BACK AND SIDE SPLASHES WHEREVER THE SURFACE ABUTS A WALL.

G. MATCHING SCRIBE STRIPS TO BE PROVIDED TO FILL ALL GAPS AND IRREGULARITIES WHERE THE EDGE OF CABINETS AND LOCKERS MEET WALLS. FILLER STRIPS ALSO TO BE PROVIDED AT CABINETRY AND LOCKERS CORNERS TO FILL ANY GAPS LEFT TO ALLOW DOORS AND DRAWERS TO FUNCTION PROPERLY.

H. DIMENSIONS ARE FROM FACE OF GYP. BD. TO FACE OF GYP. BD. U.N.O.

I. PROVIDE FINISHED END ON ALL EXPOSED SURFACES OF CASEWORK.

App Architecture
creative focused design
615 Woodside Drive, Englewood, Ohio 45322
T 937.836.8898 F 937.832.3696
www.app-arch.com

STATE OF OHIO
TIMOTHY J. BEMENT
12305
REGISTERED ARCHITECT
Timothy J. Bement, License #12305
Expiration Date 12/31/2023

MIAMI COUNTY ONE STOP CENTER
BOARD OF COMMISSIONERS FOR MIAMI COUNTY, OHIO
BARNHART ROAD, TROY, OHIO 45373

ISSUE

NO.	DATE	DESCRIPTION
1	04/08/2022	FOR CONSTRUCTION

DATE	04/08/22
JOB NO.	3923.00
DRAWN	MLG
CHECKED	RFW/TJB

COPYRIGHT © 2022 - App Architecture, Inc.

TITLE
INTERIOR ELEVATIONS - DRIVERS EXAM

SHEET NO.
A7.6

4/8/2022 5:04:33 PM

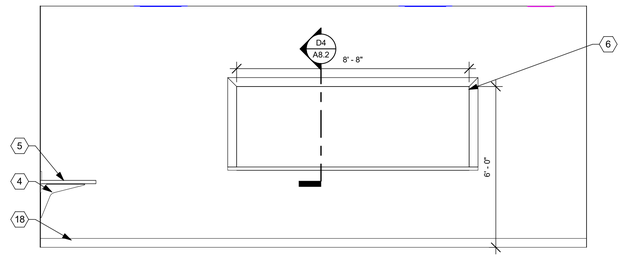

B1 601 SOUTH
3/8" = 1'-0"

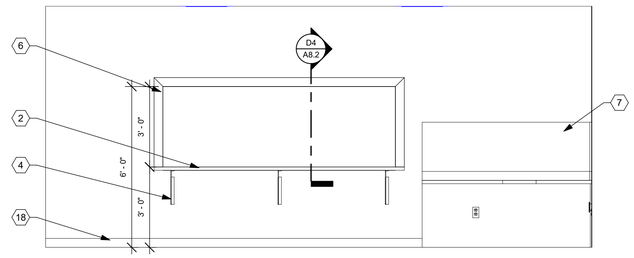

B3 605 NORTH
3/8" = 1'-0"

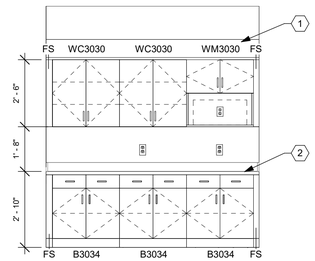

B5 604 NORTH
3/8" = 1'-0"

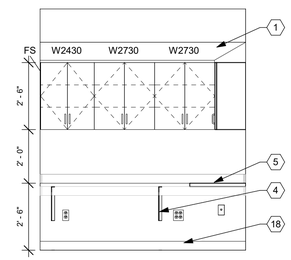

C1 614 EAST
3/8" = 1'-0"

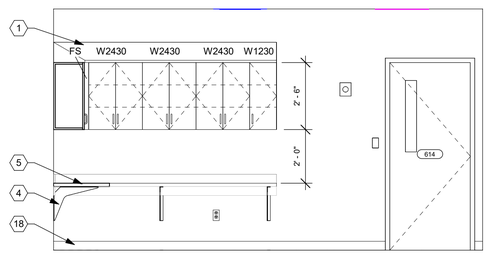

C2 614 SOUTH
3/8" = 1'-0"

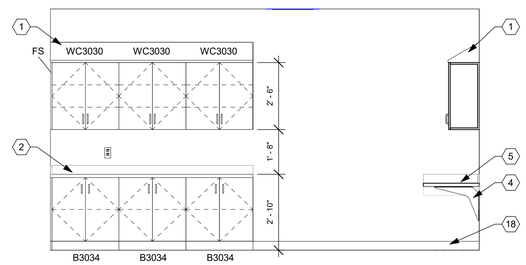

C3 614 NORTH
3/8" = 1'-0"

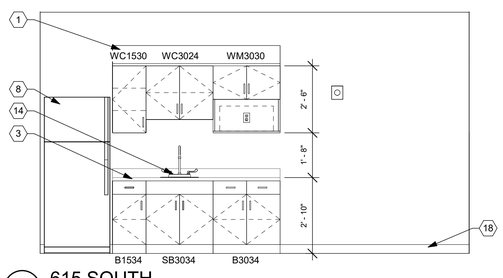

E1 615 SOUTH
3/8" = 1'-0"

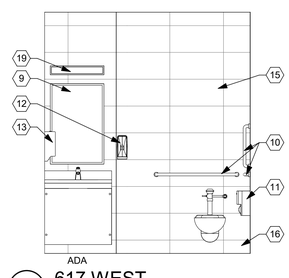

E2 617 WEST
3/8" = 1'-0"

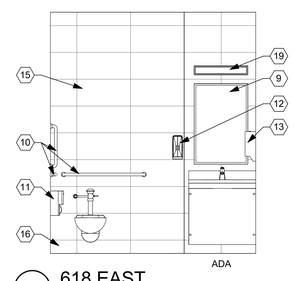

E3 618 EAST
3/8" = 1'-0"

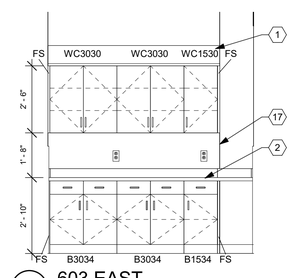

E4 603 EAST
3/8" = 1'-0"

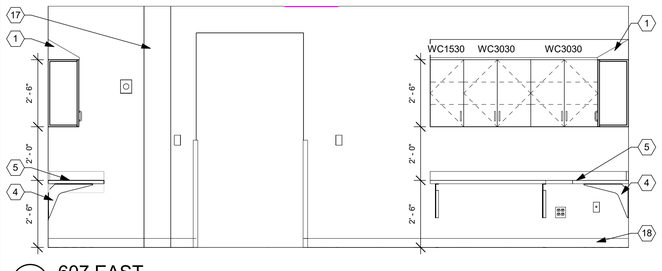

F1 607 EAST
3/8" = 1'-0"

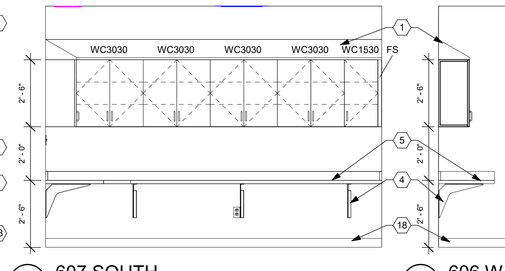

F3 607 SOUTH
3/8" = 1'-0"

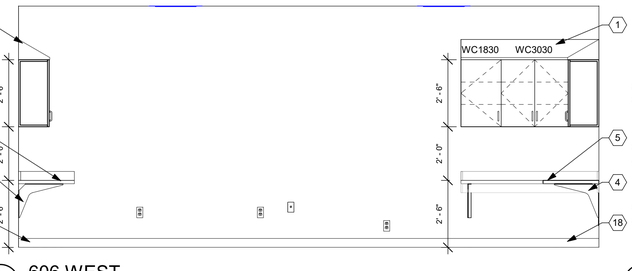

F4 606 WEST
3/8" = 1'-0"

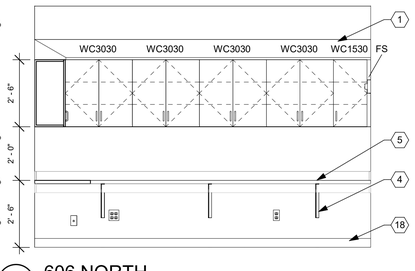

F6 606 NORTH
3/8" = 1'-0"

CONSTRUCTION NOTES

(00) INDICATES CONSTRUCTION NOTE.

1. PLASTIC LAMINATE (PL-1) SLOPED TOP. REFER TO A8.1 FOR DETAILS.
2. PLASTIC LAMINATE (PL-3) COUNTERTOP WITH 4" BACKSPLASH. REFER TO FINISH SCHEDULE.
3. SOLID SURFACE (SSM-1) COUNTERTOP WITH 4" BACKSPLASH. REFER TO FINISH SCHEDULE.
4. METAL WORKTOP SUPPORT BRACKETS SPACED 4' - 0" O.C. MAX.
5. TYPICAL WORK SURFACE. REFER TO F1/A8.1 FOR DETAILS.
6. OPENING THROUGH WALL. FRAME WITH 4" WOOD TRIM. PROVIDE PLASTIC LAMINATE (PL-3) COUNTER .
7. FURNITURE BY OWNER.
8. REFRIGERATOR. OFCI.
9. 24" x 36" MIRROR.
10. ADA TOILET GRAB BARS. REFER TO SHEET A0.1 FOR MOUNTING AND CLEARANCE HEIGHTS.
11. TOILET TISSUE DISPENSER. OFCI.
12. SOAP DISPENSER. OFCI.
13. PAPER TOWEL DISPENSER. OFCI.
14. UNDERMOUNT STAINLESS STEEL SINK. REFER TO PLUMBING DRAWINGS.
15. PORCELAIN WALL TILE (PWT-1). REFER TO FINISH SCHEDULE A0.2.
16. PORCELAIN WALL TILE BASE (PWTB). REFER TO FINISH SCHEDULE A0.2.
17. FRAME AROUND COLUMN.
18. 4" RUBBER BASE (RB-1) REFER TO FINISH SCHEDULE.
19. WALL MOUNT LIGHT FIXTURE. REFER TO ELECTRICAL DRAWINGS.

GENERAL NOTES

A. REFER TO ROOM FINISH SCHEDULE, MATERIAL LEGEND AND FINISHES PLANS FOR FINISH AND MATERIAL DETAILS.

B. ELECTRICAL INFORMATION SHOWN FOR REFERENCE ONLY. REFER TO ELECTRICAL PLANS FOR DETAILS.

C. PROVIDE WPT BLOCKING BEHIND ALL WALL HUNG ACCESSORIES, CABINETS, FURNISHINGS, HANDRAILS U.N.O.

D. REFER TO ELEVATIONS OF SHEET A0.1 FOR TOILET ROOM ACCESSORY MOUNTING HEIGHTS AND CLEARANCES.

E. "CG" INDICATES CORNER GUARD. REFER TO INTERIOR DETAILS FOR MORE INFORMATION.

F. ALL COUNTERTOPS AND WORK SURFACES TO HAVE BACK AND SIDE SPLASHES WHEREVER THE SURFACE ABUTS A WALL.

G. MATCHING SCRIBE STRIPS TO BE PROVIDED TO FILL ALL GAPS AND IRREGULARITIES WHERE THE EDGE OF CABINETS AND LOCKERS MEET WALLS. FILLER STRIPS ALSO TO BE PROVIDED AT CABINETRY AND LOCKERS CORNERS TO FILL ANY GAPS LEFT TO ALLOW DOORS AND DRAWERS TO FUNCTION PROPERLY.

H. DIMENSIONS ARE FROM FACE OF GYP. BD. TO FACE OF GYP. BD. U.N.O.

I. PROVIDE FINISHED END ON ALL EXPOSED SURFACES OF CASEWORK.

App Architecture
creative focused design
615 Woodside Drive, Englewood, Ohio 45322
T 937.836.8898 F 937.832.3696
www.app-arch.com

STATE OF OHIO
TIMOTHY J. BEMENT
12305
REGISTERED ARCHITECT
Timothy J. Bement, License #12305
Expiration Date 12/31/2023

MIAMI COUNTY ONE STOP CENTER
BOARD OF COMMISSIONERS FOR MIAMI COUNTY, OHIO
BARNHART ROAD, TROY, OHIO 45373

ISSUE

NO.	DATE	DESCRIPTION
1	04/08/2022	FOR CONSTRUCTION

DATE	04/08/22
JOB NO.	3923.00
DRAWN	MLG
CHECKED	RFW/TJB

COPYRIGHT © 2022 - App Architecture, Inc.

TITLE
INTERIOR ELEVATIONS - DEPARTMENT OF DEVELOPMENT

SHEET NO.
A7.7

4/8/2022 5:04:37 PM

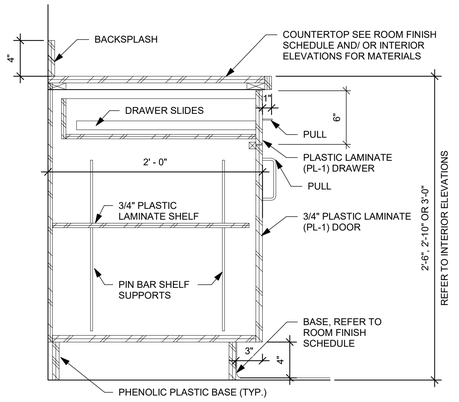

B1 TYP. BASE CABINET (B) DETAIL
1 1/2" = 1'-0"

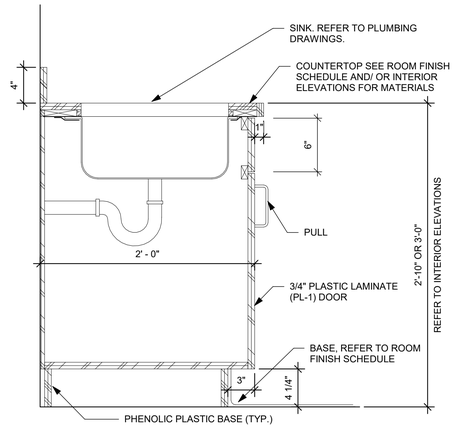

B3 TYP. SINK BASE CABINET (SB) DETAIL
1 1/2" = 1'-0"

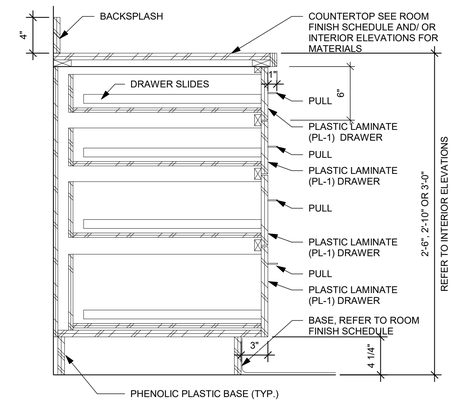

B4 4-DRAWER BASE CABINET (4BD) DETAIL
1 1/2" = 1'-0"

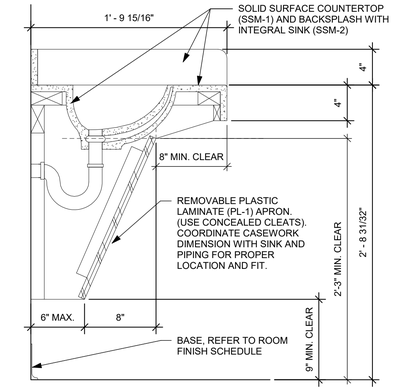

B6 "ADA" SINK DETAIL
1 1/2" = 1'-0"

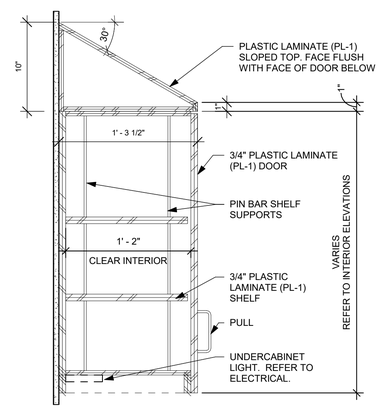

D1 WALL CABINET (WC) DETAIL
1 1/2" = 1'-0"

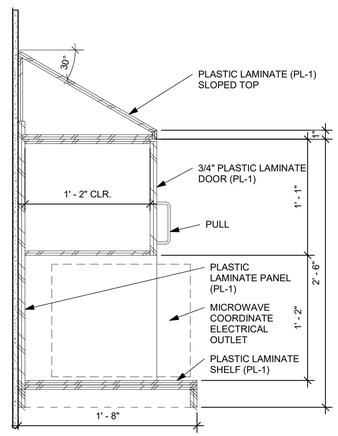

D3 MICROWAVE CABINET (WM) DETAIL
1 1/2" = 1'-0"

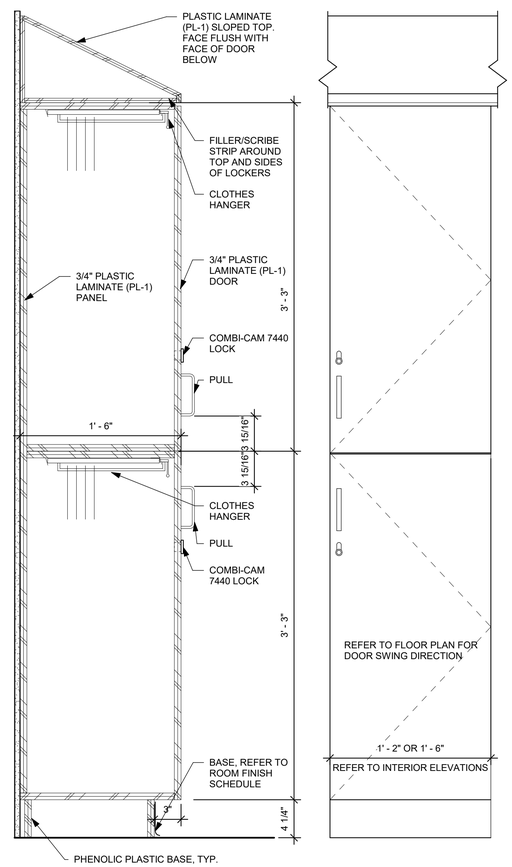

F4 TYP. LOCKER (LKR-1) DETAIL AND ELEVATION
1 1/2" = 1'-0"

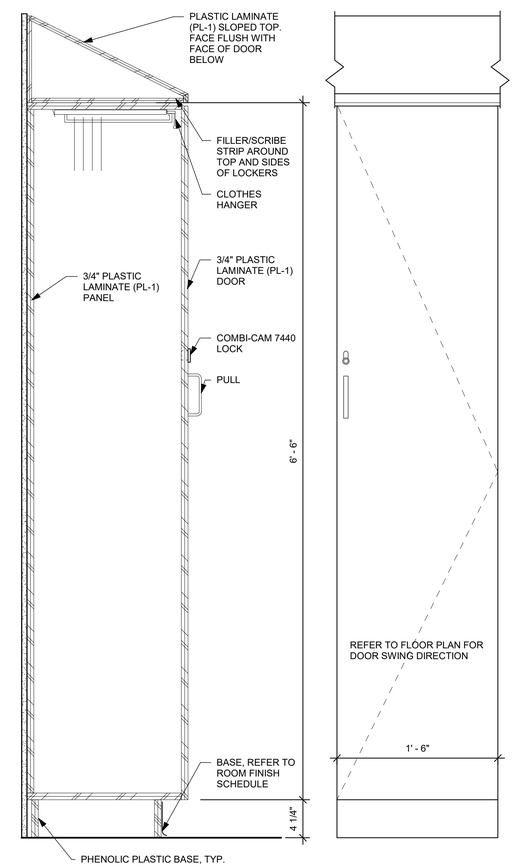

F6 TYP. LOCKER (LKR-2) DETAIL AND ELEVATION
1 1/2" = 1'-0"

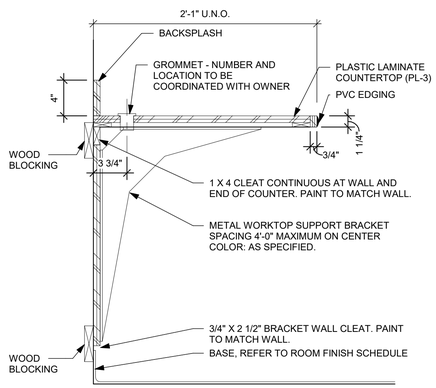

F1 TYP. WORK SURFACE DETAIL
1 1/2" = 1'-0"

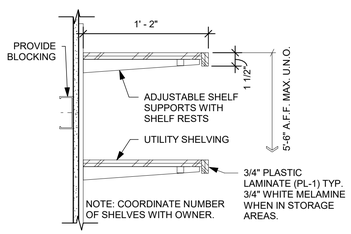

F2 ADJUSTABLE SHELVING DETAIL
1 1/2" = 1'-0"

App Architecture
creative focused design
615 Woodside Drive, Englewood, Ohio 45322
T 937.836.8898 F 937.832.3696
www.app-arch.com

STATE OF OHIO
TIMOTHY J. BEMENT
12305
REGISTERED ARCHITECT
Timothy J. Bement, License #12305
Expiration Date 12/31/2023

MIAMI COUNTY ONE STOP CENTER
BOARD OF COMMISSIONERS FOR MIAMI COUNTY, OHIO
BARNHART ROAD, TROY, OHIO 45373

ISSUE

NO.	DATE	DESCRIPTION
1	04/08/2022	FOR CONSTRUCTION

DATE	04/08/22
JOB NO.	3923.00
DRAWN	MLG
CHECKED	RFW/TJB

COPYRIGHT © 2022 - App Architecture, Inc.

TITLE
CASEWORK DETAILS

SHEET NO.
A8.1

4/8/2022 5:04:38 PM

BULLET RESISTANCE NOTES

BASIS OF DESIGN FOR BULLET RESISTANT PANEL SYSTEM AT AUTO TITLE WINDOWS IS:

TOTAL SECURITY SOLUTIONS
170 NATIONAL PARK DRIVE
FOWLERVILLE, MI 48836
www.TotalSecuritySolutionsInc.com
CONTACT: SANDRA PERALTA
517-223-7807 EXT. 253
SPERALTA@TSSBULLETPROOF.COM

DESIGN BASED ON TOTAL SECURITY SOLUTIONS' BULLET RESISTANT LEVEL 3
1 1/4" LP 1250 LAMINATED GLAZING MATERIAL, CLEAR ANODIZED U-CHANNEL FRAMING, STAINLESS STEEL RECESSED DEAL TRAY AND ALL MOUNTING ACCESSORIES NEEDED FOR COMPLETE SYSTEM INSTALLATION.

LEVEL III 1/2" BULLET RESISTANT FIBERGLASS SHEET BY TOTAL SECURITY SOLUTIONS. PANELS SHOULD BE INSTALLED WITH FULL LOAD RESTING SECURELY AGAINST SLAB. USE 4" BATTEN STRIPS (CUT FROM FULL SHEETS) CENTERED ALONG ENTIRE LENGTH OF ALL SHEET JOINTS.

EQUAL SYSTEMS BY OTHER VENDORS MAY BE SUBSTITUTED WITH APPROVAL BY ARCHITECT.

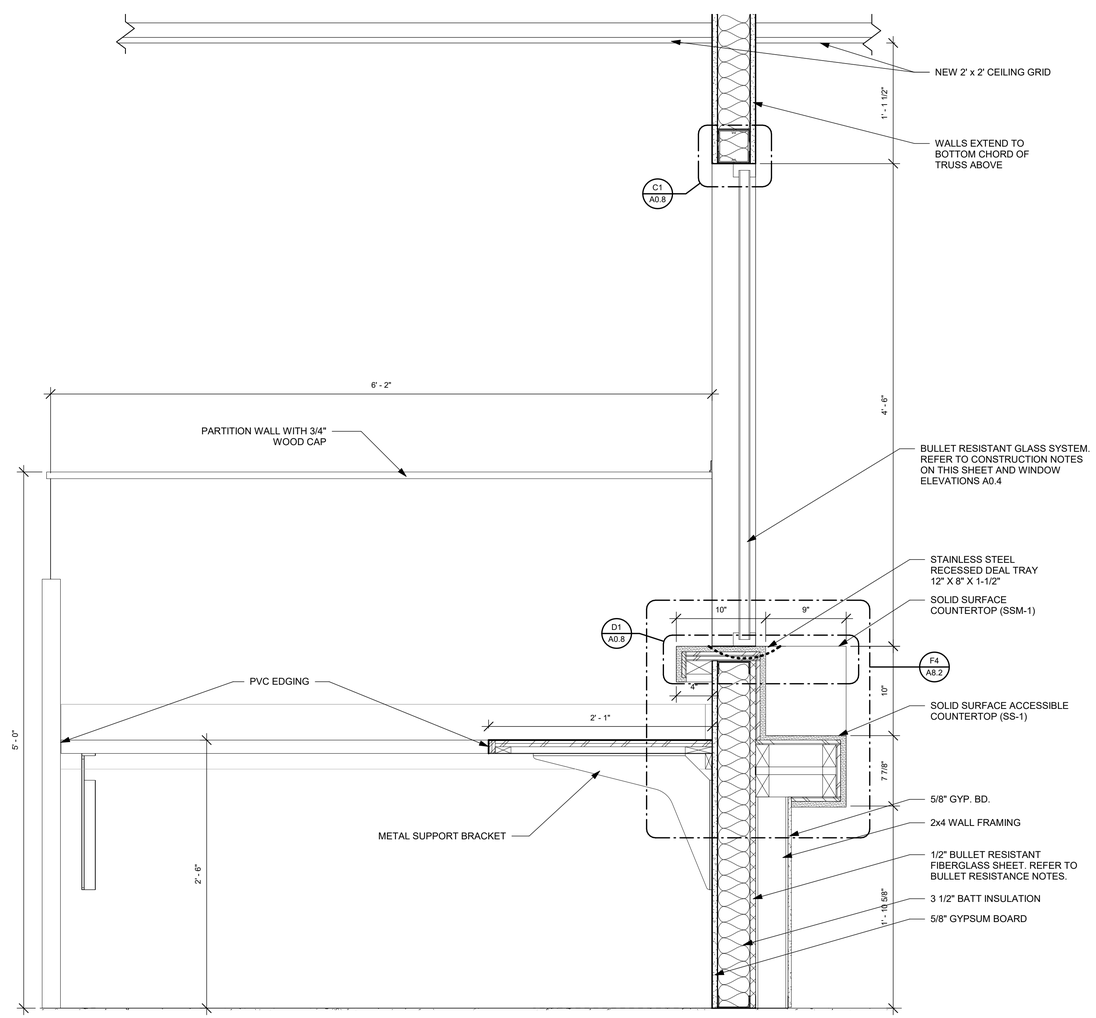

F1 AUTO TITLE RECEPTION COUNTER DETAIL
1 1/2" = 1'-0"

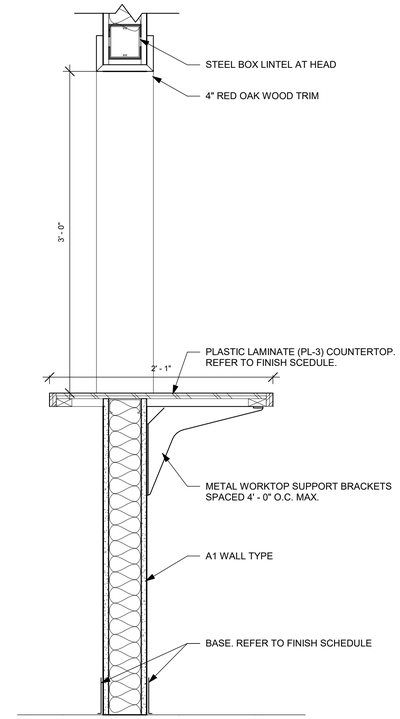

D4 PASS THROUGH COUNTER DETAIL
1 1/2" = 1'-0"

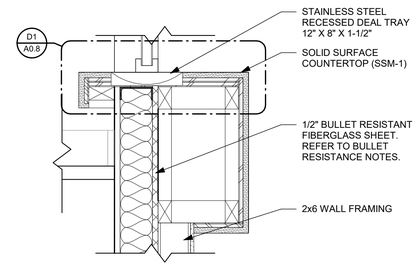

F4 AUTO TITLE RECEPTION COUNTER DETAIL
1 1/2" = 1'-0"

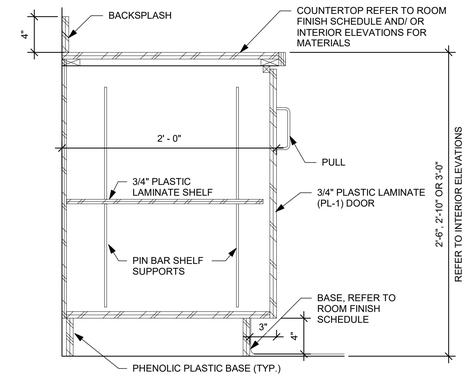

1 TYP. BASE CABINET (BT) DETAIL
1 1/2" = 1'-0"

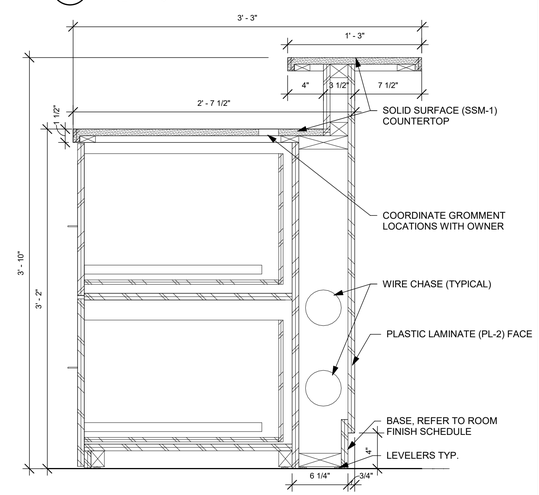

D6 DRIVERS EXAM WORKSTATION
1 1/2" = 1'-0"

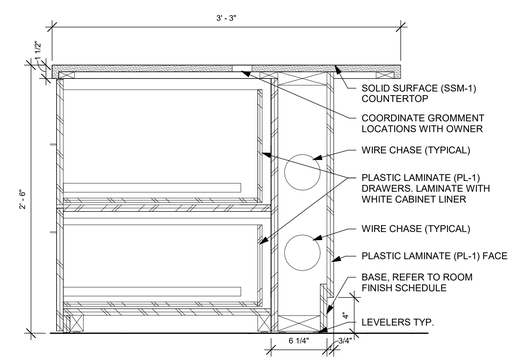

F6 ADA DRIVERS EXAM WORKSTATION
1 1/2" = 1'-0"

App Architecture
creative focused design
615 Woodside Drive, Englewood, Ohio 45322
T 937.836.8898 F 937.832.3696
www.app-arch.com

STATE OF OHIO
TIMOTHY J. BEMENT
12305
REGISTERED ARCHITECT
Timothy J. Bement, License #12305
Expiration Date 12/31/2023

MIAMI COUNTY ONE STOP CENTER
BOARD OF COMMISSIONERS FOR MIAMI COUNTY, OHIO
BARNHART ROAD, TROY, OHIO 45373

ISSUE

NO.	DATE	DESCRIPTION
1	04/08/2022	FOR CONSTRUCTION

DATE	04/08/22
JOB NO.	3923.00
DRAWN	MLG
CHECKED	RFW/TJB

COPYRIGHT © 2022 - App Architecture, Inc.

TITLE
CASEWORK DETAILS

SHEET NO.
A8.2

4/8/2022 5:04:41 PM

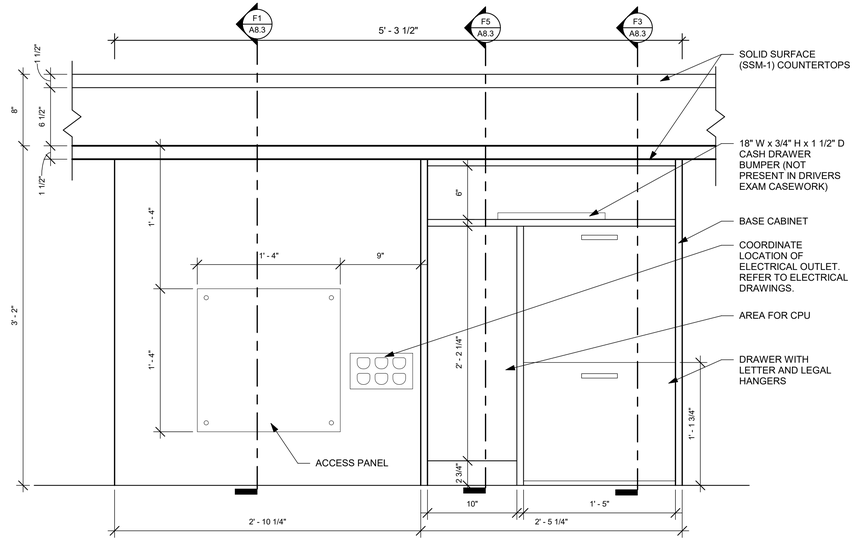

C1 BMV COUNTER TYPICAL ELEVATION (EMPLOYEE SIDE)
1 1/2" = 1'-0"

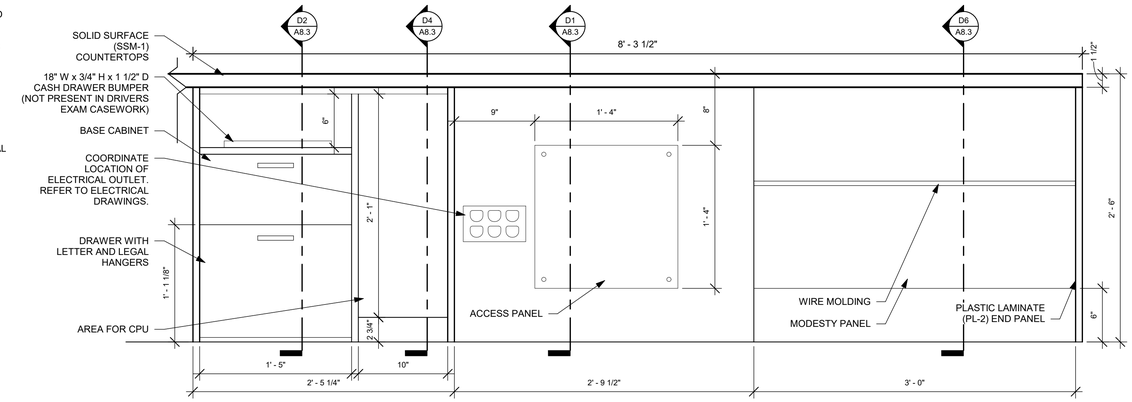

C4 BMV COUNTER TYPICAL ELEVATION (EMPLOYEE SIDE)
1 1/2" = 1'-0"

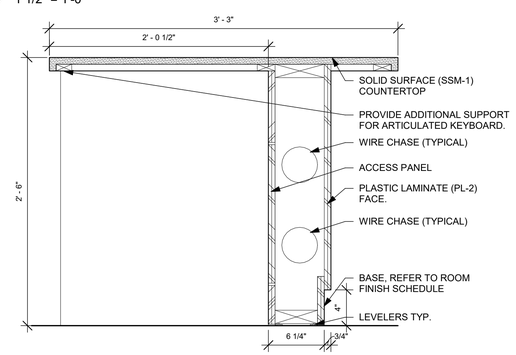

D1 BMV ADA COUNTER - OPEN SPACE
1 1/2" = 1'-0"

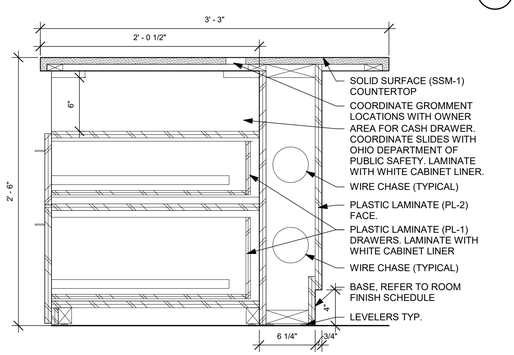

D2 BMV ADA COUNTER - DRAWERS
1 1/2" = 1'-0"

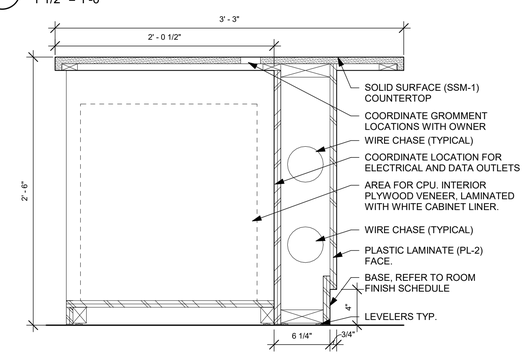

D4 BMV ADA COUNTER - CPU SPACE
1 1/2" = 1'-0"

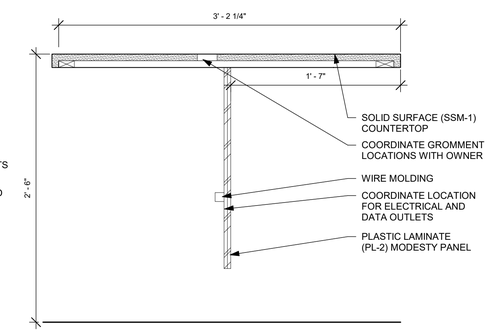

D6 BMV ADA COUNTER - MODESTY PANEL
1 1/2" = 1'-0"

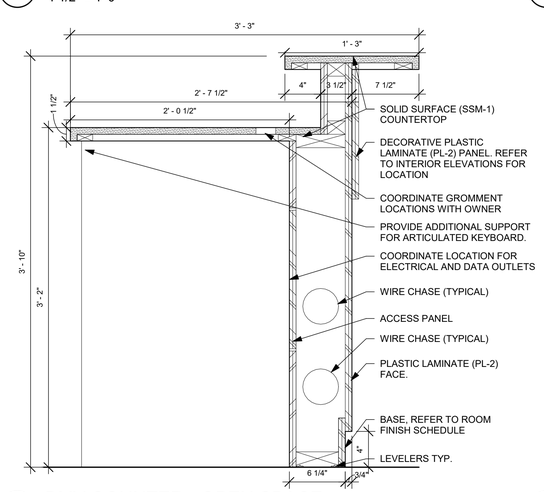

F1 BMV COUNTER - OPEN SPACE
1 1/2" = 1'-0"

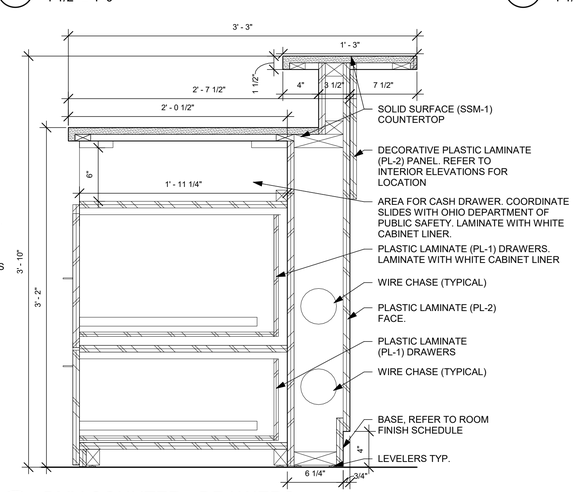

F3 BMV COUNTER - DRAWERS
1 1/2" = 1'-0"

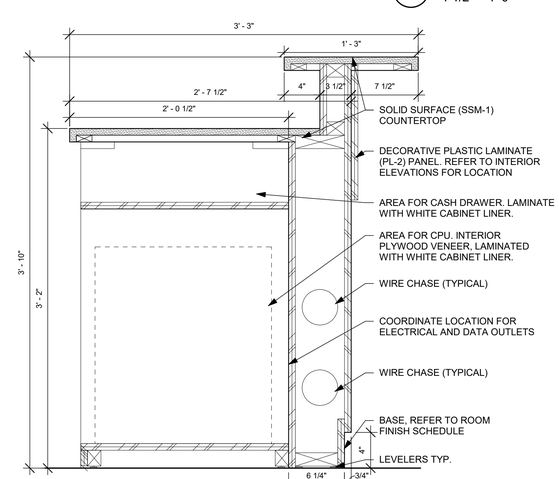

F5 BMV COUNTER - CPU SPACE
1 1/2" = 1'-0"

App Architecture
creative focused design
615 Woodside Drive, Englewood, Ohio 45322
T 937.836.8898 F 937.832.3696
www.app-arch.com

STATE OF OHIO
TIMOTHY J. BEMENT
12305
REGISTERED ARCHITECT
Timothy J. Bement, License #12305
Expiration Date 12/31/2023

MIAMI COUNTY ONE STOP CENTER
BOARD OF COMMISSIONERS FOR MIAMI COUNTY, OHIO
BARNHART ROAD, TROY, OHIO 45373

ISSUE

NO.	DATE	DESCRIPTION
1	04/08/2022	FOR CONSTRUCTION

DATE	04/08/22
JOB NO.	3923.00
DRAWN	MLG
CHECKED	RFW/TJB

COPYRIGHT © 2022 - App Architecture, Inc.

TITLE
CASEWORK DETAILS

SHEET NO.
A8.3

4/8/2022 5:04:43 PM

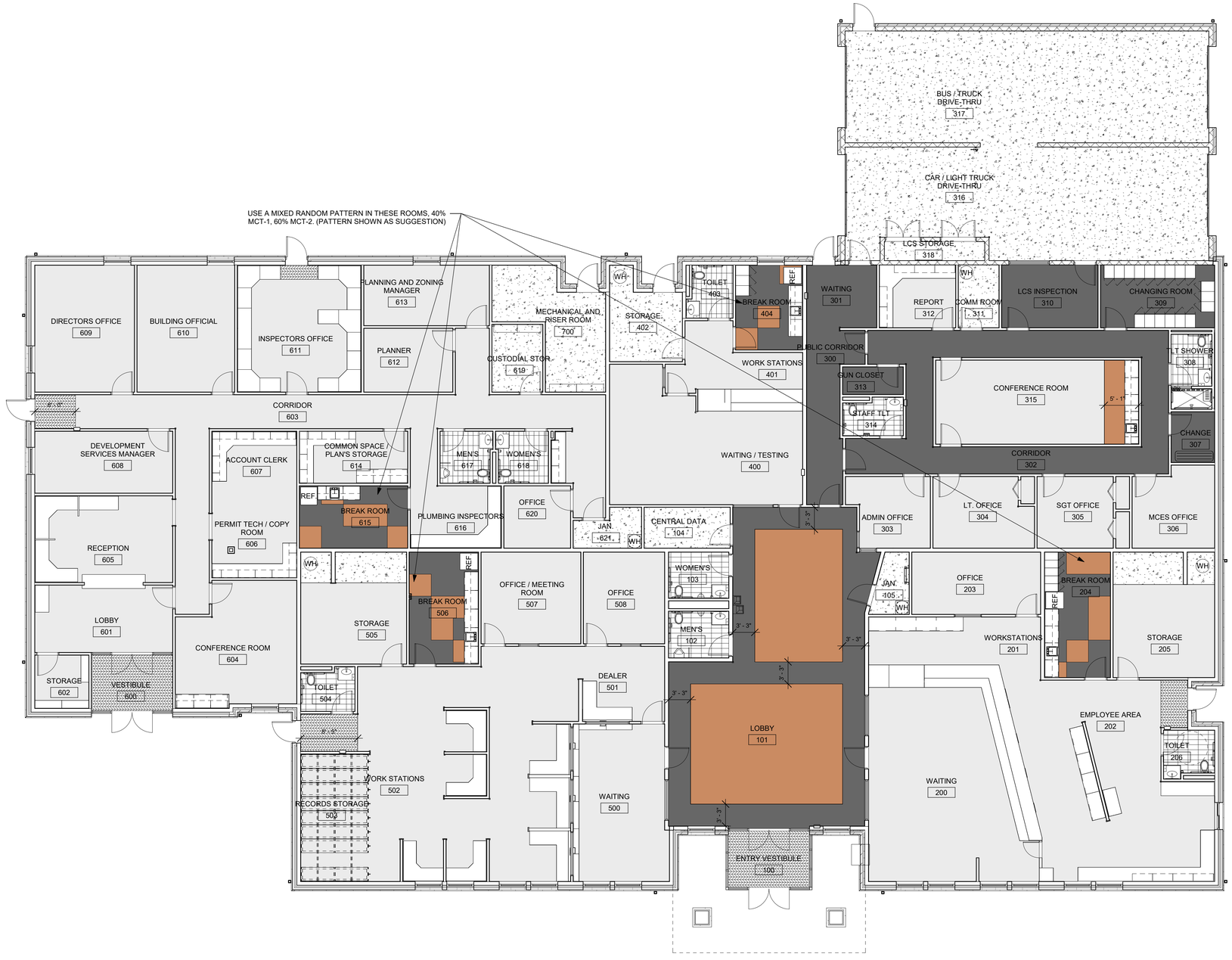

1 FLOOR FINISHES PLAN
1/8" = 1'-0"

LEGEND

- = MCT-1 - GRAPHITE
- = MCT-2 - TOBACCO LEAF
- = CPT-1 - IMPORTANCE 988
- = MAT-1 - IRON ORE
- = PT-1 - PEWTER
- = SC - SEALED CONCRETE

GENERAL NOTES

A. ALL EXPOSED TILE EDGES AT BASE, TOP, AND EXTERNAL CORNER TO BE CAPPED WITH SCHLUTER RONDEC STRIP, RONDEC-DB SATIN ANODIZED FINISH.

B. ALL MCT TO BE QUARTER-TURN INSTALLED PER MFG GUIDLINES.

C. ALL CPT-1 TO BE INSTALLED IN AN ASHLAR PATTERN, ALL PATTERN RUNNING IN THE SAME DIRECTION.

D. WALK-OFF MAT TO BE INSTALLED QUARTER TURNED.

App Architecture
creative focused design
615 Woodside Drive, Englewood, Ohio 45322
T 937.836.8898 F 937.832.3696
www.app-arch.com

STATE OF OHIO
TIMOTHY J. BEMENT
12305
REGISTERED ARCHITECT
Timothy J. Bement, License #12305
Expiration Date 12/31/2023

MIAMI COUNTY ONE STOP CENTER
BOARD OF COMMISSIONERS FOR MIAMI COUNTY, OHIO
BARNHART ROAD, TROY, OHIO 45373

ISSUE

NO.	DATE	DESCRIPTION
1	04/08/2022	FOR CONSTRUCTION

DATE	04/08/22
JOB NO.	3923.00
DRAWN	MLG
CHECKED	RFW/TJB

COPYRIGHT © 2022 - App Architecture, Inc.

TITLE
FINISHES PLAN

SHEET NO.
A9.1

4/8/2022 5:04:46 PM

1 | 2 | 3 | 4 | 5 | 6 | 7

GENERAL STRUCTURAL NOTES

GENERAL

1. THE STRUCTURE IS DESIGNED TO BE SELF-SUPPORTING AND STABLE AFTER THE CONSTRUCTION IS FULLY COMPLETED. IT IS SOLELY THE CONTRACTOR'S RESPONSIBILITY TO DETERMINE ERECTION PROCEDURE AND SEQUENCE AND TO ENSURE THE SAFETY OF THE BUILDING AND ITS COMPONENT PARTS DURING ERECTION. THIS INCLUDES THE ADDITION OF WHATEVER SHORING, SHEETING, TEMPORARY BRACING, GUYS, OR TIEDOWNS WHICH MIGHT BE NECESSARY. SUCH MATERIAL IS TO REMAIN THE CONTRACTOR'S PROPERTY AFTER COMPLETION OF THE PROJECT.

2. IT IS SOLELY THE CONTRACTOR'S RESPONSIBILITY TO FOLLOW ALL APPLICABLE SAFETY CODES AND REGULATIONS DURING ALL PHASES OF CONSTRUCTION.

3. MECHANICAL EQUIPMENT LOADS, OPENINGS AND STRUCTURE IN ANY WAY RELATED TO MECHANICAL REQUIREMENTS ARE SHOWN FOR BIDDING PURPOSES ONLY. CONTRACTOR IS TO OBTAIN APPROVAL OF MECHANICAL AND OTHER TRADES BEFORE PROCEEDING WITH SUCH PORTION OF THE WORK. EXCESS COST RELATED TO VARIATION IN MECHANICAL REQUIREMENTS TO BE BORNE BY MECHANICAL CONTRACTOR.

4. DO NOT SCALE THE DRAWINGS WHERE DIMENSIONS ARE NOT SPECIFICALLY GIVEN. SEE ARCHITECTURAL DRAWINGS FOR DIMENSIONS AND ELEVATIONS NOT SHOWN. COORDINATE ALL DIMENSIONS AND ELEVATIONS WITH THE ARCHITECTURAL DRAWINGS. ALL DIMENSIONS AND ELEVATIONS SHOWN ON THE STRUCTURAL DRAWINGS ARE NOT INTENDED TO AUGMENT, NOR SUPERSEDE THOSE SHOWN ON THE ARCHITECTURAL DRAWINGS.

5. FIELD VERIFY ALL DIMENSIONS AND CONDITIONS PRIOR TO CONSTRUCTION. NOTIFY THE ARCHITECT IMMEDIATELY WHERE CONFLICTS EXIST WITHIN THE DRAWINGS OR BETWEEN THE DRAWINGS AND FIELD CONDITIONS.

6. THROUGHOUT THESE PLANS, THE TERM "PROVIDE" IS DEFINED AS "SUPPLY AND INSTALL".

7. SHOP DRAWINGS ARE TO BE SUBMITTED BY COMPLETE ERECTION PHASE OR SEQUENCE. LIMITS OF EACH INDIVIDUAL ERECTION PHASE OR SEQUENCE ARE TO BE CLEARLY INDICATED ON THE PLANS. INCOMPLETE OR PIECEMEAL SHOP DRAWINGS WILL BE RETURNED PRIOR TO REVIEW. RESUBMITTALS ARE TO HAVE REVISIONS CLEARLY MARKED OR IDENTIFIED. THE CONTRACTOR SHALL REVIEW AND ACCEPT FULL RESPONSIBILITY FOR DIMENSIONAL CORRECTNESS. ALL SHOP DRAWINGS MUST BEAR THE APPROVAL STAMP OF THE CONTRACTOR PRIOR TO REVIEW BY THE ARCHITECT OR ENGINEER.

8. PREFABRICATED ITEMS SHOWN ON THE STRUCTURAL DRAWINGS ARE REFERENCED FOR GENERAL COORDINATION PURPOSES ONLY. THESE SYSTEMS SHALL BE DESIGNED, FURNISHED, AND INSTALLED AS REQUIRED BY OTHER PORTIONS OF THE CONTRACT DOCUMENTS. JEZERINAC GEERS WILL REVIEW THE DESIGN METHODOLOGY, LOADS, AND INSTALLATION DETAILS AS PART OF THE SHOP DRAWING REVIEW PROCESS, AND MAY REQUEST A SEALED CALCULATION PACKAGE FOR REVIEW.

9. SHOULD ANY OF THE DETAILED INSTRUCTIONS SHOWN ON THE PLANS CONFLICT WITH THE GENERAL STRUCTURAL NOTES, THE SPECIFICATIONS OR WITH EACH OTHER, THE STRICTEST PROVISION WILL GOVERN.

10. CODE INFORMATION

- GOVERNING CODE:	2017 OHIO BUILDING CODE
- BUILDING RISK CATEGORY:	CATEGORY II
FLOOR LIVE LOADS (WITH ALLOWABLE REDUCTIONS WERE APPLICABLE)	
- FIRST FLOOR OCCUPANCIES	100 PSF
ROOF LIVE LOADS	
- ORDINARY ROOFS	20 PSF
SNOW LOADS	
- GROUND SNOW LOAD (Pg)	20 PSF
- FLAT ROOF SNOW LOAD (Pf)	20 PSF
- SNOW EXPOSURE FACTOR (Ce)	1.0
- SNOW LOAD IMPORTANCE FACTOR (Is)	1.1
- THERMAL FACTOR (Ct)	1.0
WIND LOADS	
- WIND IMPORTANCE FACTOR	1.0
- BASIC ULTIMATE WIND SPEED (V ult)	115 MPH
- BASIC ALLOWABLE WIND SPEED (V asd)	90 MPH
- SITE EXPOSURE CATEGORY	C
- INTERNAL PRESSURE COEFFICIENT	+/- 0.18
SEISMIC LOADS:	
- SEISMIC IMPORTANCE FACTOR	1.0
- MAPPED SPECTRAL RESPONSE ACCELERATION (Ss)	0.181
- MAPPED SPECTRAL RESPONSE ACCELERATION (S1)	0.073
- SEISMIC SITE CLASS	D
- DESIGN SPECTRAL RESPONSE ACCELERATION (Sds)	0.193
- DESIGN SPECTRAL RESPONSE ACCELERATION (Sd1)	0.117
- SEISMIC DESIGN CATEGORY	B
- RESPONSE MODIFICATION COEFFICIENT (R)	2.0
- SEISMIC RESPONSE COEFFICIENT (Cs)	0.097
- SEISMIC DESIGN BASE SHEAR (V)	33.0 K
- ANALYSIS PROCEDURE	EQUIVALENT LATERAL FORCE
- BASIC SEISMIC FORCE-RESISTING SYSTEM:	SHEAR PANELS WITH OTHER MATERIALS
SPECIAL LOADS	
- INTERIOR WALLS & PARTITIONS	5 PSF HORIZONTAL
GEOTECHNICAL:	
- GEOTECHNICAL ENGINEER:	BOWSER-MORNER, INC.
- REFERENCE REPORT I.D. OR NUMBER:	202691-1221-2224
- REFERENCE REPORT DATE:	DECEMBER 17, 2021
- ALLOWABLE DESIGN BEARING PRESSURE:	2,000 PSF
- FOUNDATION TYPE:	SHALLOW SPREAD FOOTINGS

REINFORCED CONCRETE

1. SPECIFICATIONS: IN GENERAL, COMPLY WITH ACI-301-16, "SPECIFICATIONS FOR STRUCTURAL CONCRETE".

2. MATERIALS:
   A. STRUCTURAL CONCRETE:

MIX USAGE	f'c (PSI)	MAX w/cm	AIR CONTENT
LEAN CONCRETE	1,500	---	---
FOOTINGS & INTERIOR COLUMN PIERS	3,500	0.55	---
INTERIOR SLABS ON GRADE	3,500	0.50	---
PERIMETER FOUNDATION STEMWALLS, EXTERIOR FOUNDATION WALLS, & EXTERIOR COLUMN PIERS	4,500	0.45	5%-7%
EXTERIOR SLABS ON GRADE AND OTHER EXTERIOR CONCRETE CONSTRUCTION	4,500	0.45	5%-7%

   B. ALL DEFORMED REINFORCING BARS: FY = 60,000 PSI.
   C. CEMENT: PORTLAND CEMENT, ASTM C150, TYPE 1. ALL CEMENT FOR CONCRETE EXPOSED TO VIEW IS TO BE FROM THE SAME MILL.
   D. AGGREGATES: ASTM C33, USE SIZE NO. 57 FOR ALL MIXES UNLESS NOTED OTHERWISE.
   E. ADMIXTURES:
      1. WATER-REDUCING, LOW AND MID RANGE: ASTM C494, TYPE A OR D.
      2. HIGH-RANGE WATER REDUCING, SUPERPLASTICIZER: ASTM C494, TYPE F OR G.
   F. AIR-ENTRAINING: ASTM C260.
   G. FLY-ASH: ASTM C618, TYPE C OR F.
   H. NON-CHLORIDE, NON-CORROSIVE ACCELERATOR: ASTM C494, TYPE C OR E.
   I. VAPOR RETARDER SHALL CONFORM TO ASTM E1745 "STANDARD SPECIFICATION FOR PLASTIC WATER VAPOR RETARDERS USED IN CONTACT WITH SOIL OR GRANULAR FILL UNDER CONCRETE SLABS", CLASS A.
   J. VAPOR RETARDER SHALL BE INSTALLED IN ACCORDANCE WITH ASTM E1643 "STANDARD PRACTICE FOR INSTALLATION OF WATER VAPOR RETARDERS USED IN CONTACT WITH EARTH OR GRANULAR FILL UNDER CONCRETE SLABS. THE VAPOR RETARDER/BARRIER SHALL BE A MINIMUM OF 10 MILS THICK AND PLACED DIRECTLY ON THE GRANULAR FILL, BELOW THE CONCRETE FLOOR SLAB. LAP JOINTS A MINIMUM OF 6 INCHES AND SEAL WITH MANUFACTURER'S RECOMMENDED TAPE OR ADHESIVE.

3. FIELD MANUAL: PROVIDE AT LEAST ONE COPY OF THE ACI FIELD REFERENCE MANUAL, SP-15 IN THE FIELD OFFICE AT ALL TIMES.

4. SUBMITTALS:
   A. SUBMIT A MIX DESIGN FOR EACH MIXTURE USAGE REQUIRED FOR THE PROJECT. CONCRETE PROPORTIONS ARE TO BE ESTABLISHED ON THE BASIS OF PREVIOUS FIELD EXPERIENCE OR TRIAL MIXTURES.
   B. SUBMIT PLACING DRAWINGS FOR ALL REINFORCING. INDICATE STRENGTH, SIZE, AND DETAILS OF ALL BAR REINFORCING.
   C. SUBMIT PRODUCT LITERATURE FOR ADMIXTURES AND CURING COMPOUNDS PROPOSED FOR USE.
   D. SUBMIT REPORTS OF ALL REQUIRED TESTING AND INSPECTIONS.

5. CONTINGENCIES:
   A. PROVIDE LEAN CONCRETE UNDER FOUNDATIONS FOR ACCIDENTAL OVER EXCAVATION, SOFT SPOTS, AND UTILITY TRENCHES.

6. FOOTINGS, PIERS, WALLS:
   A. DOWELS IN FOOTINGS TO MATCH VERTICAL PIER OR WALL REINFORCING.
   B. PROVIDE CORNER BARS AT WALL AND FOOTING CORNERS TO MATCH HORIZONTAL REINFORCING. MINIMUM LENGTH OF EACH LEG - 36 BAR DIAMETERS.

7. SPLICES:
   A. LAP SPLICE REINFORCING BARS AS SCHEDULED.

8. CONSTRUCTION JOINTS:
   A. CONSTRUCTION JOINTS PERMITTED ONLY WHERE SHOWN OR AS APPROVED BY THE STRUCTURAL ENGINEER.

9. FINISHES:
   A. PER ACI 117, SURFACES OF INTERIOR SLABS ON GRADE ARE TO BE FINISHED TO THE FOLLOWING TOLERANCES: FLOOR FLATNESS F(f)=30 AND LEVELNESS F(l)=20 UNLESS NOTED OTHERWISE IN SPECIFICATIONS.
   B. TYPICAL INTERIOR FLOOR AREAS TO RECEIVE CARPET, RESILIENT FLOOR COVERING, OR TO REMAIN EXPOSED - TROWELED FINISH.
   C. INTERIOR FLOOR AREAS TO RECEIVE QUARRY TILE OR CERAMIC TILE - FLOATED FINISH.
   D. EXTERIOR SLABS - BROOM FINISH.

10. CURING:
   A. CURING IS TO COMMENCE IMMEDIATELY AFTER CONCRETE PLACEMENT AND CONTINUE FOR AT LEAST 7 DAYS. DO NOT ALLOW CURING TO BE DELAYED OVERNIGHT.
   B. INTERIOR SLABS TO RECEIVE QUARRY TILE OR CERAMIC TILE ARE TO BE MOIST-CURED WITHOUT THE USE OF A CURING COMPOUND.
   C. ALL OTHER SLABS MAY BE EITHER MOIST-CURED OR RECEIVE AN APPLICATION OF CURING COMPOUND.

11. FIELD QUALITY CONTROL:
   A. OBTAIN CONCRETE FOR REQUIRED TESTS AT POINT OF PLACEMENT. IF CONCRETE IS PUMPED, OBTAIN CONCRETE AT DISCHARGE END.
   B. FOR EACH CLASS OF CONCRETE, OTHER THAN LEAN CONCRETE, PERFORM ONE STRENGTH TEST FOR EACH 50 YARDS, OR FRACTION THEREOF, FOR ONE DAY PLACEMENT.
   C. DETERMINE SLUMP FOR EACH STRENGTH TEST.
   D. DETERMINE AIR CONTENT FOR EACH STRENGTH TEST OF EXTERIOR EXPOSED CONCRETE.
   E. MAINTAIN RECORDS OF ALL TESTS INDICATING EXACT LOCATION OF THE STRUCTURE REPRESENTED BY EACH TEST.

MASONRY

1. MATERIALS:
   A. CONCRETE BLOCK: ASTM C90 (HOLLOW AND SOLID), MINIMUM NET AREA COMPRESSIVE STRENGTH OF CONCRETE MASONRY UNITS = 2,600 PSI.
   B. MORTAR: ASTM 270 TYPE S, MINIMUM COMPRESSIVE STRENGTH = 1,800 PSI
   C. GROUT FOR BOND BEAM AND CORE FILL: ASTM C476, COARSE TYPE WITH f'c = 2,500 PSI MIN.
   D. DESIGN COMPRESSIVE STRENGTH OF MASONRY SYSTEM: f'm = 2,250 PSI
   E. HORIZONTAL JOINT REINFORCING: STANDARD LADDER TYPE, 9 GA., MILL GALVANIZED FINISH. PROVIDE AT 8" O.C. BELOW GRADE, AND 16" O.C. ABOVE GRADE, UNLESS NOTED OTHERWISE.

2. CONTROL JOINTS:
   A. PROVIDE CONTROL JOINTS IN ALL MASONRY WALLS AT A SPACING NOT TO EXCEED THREE TIMES THE WALL HEIGHT OR 24 FEET ON CENTER, WHICHEVER IS SMALLER. IN ADDITION, PROVIDE CONTROL JOINTS AT THE ENDS OF LINTELS, CHANGES IN WALL HEIGHT, CHANGES IN WALL THICKNESS, WITHIN 2 FEET OF WALL CORNERS AND INTERSECTIONS, TRANSITIONS FROM INTERIOR WALL TO EXTERIOR WALL, AND TRANSITIONS FROM WALL BEARING ON FOUNDATION TO WALL BEARING ON FLOOR SLAB.

3. MISCELLANEOUS:
   A. PROVIDE 100% SOLID CMU BEARING, MINIMUM 3 COURSES UNDER BEAMS, UNLESS DETAILED OTHERWISE.
   B. PROVIDE SOLID OR GROUT-FILLED CMU FOR ALL BELOW-GRADE FOUNDATION WALLS.
   C. FILL CORE SOLID AROUND CAST-IN ANCHOR RODS.
   D. PROVIDE SOLID CMU OR SOLIDLY FILLED HOLLOW CMU AT ALL EPOXY ANCHOR AND WEDGE ANCHOR LOCATIONS. EXTEND SOLID AREA AT LEAST 8" IN ALL DIRECTIONS FROM CENTER OF ANCHOR.
   E. FILL ALL BEARING POCKETS AROUND BEAM SEATS WITH SOLID CMU.
   F. HOLLOW MASONRY UNITS TO BE LAID WITH FULL MORTAR COVERAGE ON HORIZONTAL AND VERTICAL FACE SHELLS. WEBS ARE TO ALSO BE BEDDED IN ALL COURSES OF PIERS, PILASTERS, THE STARTING COURSE ON FOOTINGS, AND WHEN ADJACENT TO CELLS OR CAVITIES TO BE REINFORCED OR FILLED WITH CONCRETE OR GROUT. SOLID UNITS TO BE LAID WITH FULL HEAD AND BED JOINTS.
   G. PROVIDE APPROPRIATE MASONRY ANCHORS AT 16" O.C. MAX. TO TIE MASONRY TO ABUTTING STEEL COLUMNS, STEEL BEAM WEBS, AND ALL ABUTTING CONCRETE SURFACES.
   H. WHERE HOLLOW MASONRY UNITS ARE USED ABOVE HOLLOW MASONRY UNITS OF A DIFFERENT THICKNESS, PROVIDE A CONTINUOUS COURSE OF SOLID MASONRY AT LEAST 8" HIGH BELOW THE TRANSITION.
   I. LAP SPLICE REINFORCING BARS AS SCHEDULED.
   J. ALL GROUTING OF MASONRY WALLS IS TO BE BY THE LOW-LIFT GROUTING METHOD (MAXIMUM LIFT HEIGHT 5'-0"), UNLESS CLEAN-OUTS AND INSPECTIONS ARE PROVIDED.

STRUCTURAL STEEL

1. MATERIALS:
   A. STRUCTURAL STEEL WIDE FLANGE SHAPES: ASTM A992, Fy = 50 KSI
   B. STRUCTURAL STEEL CHANNELS, ANGLES, PLATES, ETC.: ASTM A36, Fy = 36 KSI
   C. HIGH STRENGTH BOLTS: ASTM A325 OR A490
   D. ANCHOR RODS: ASTM F1554, GRADE 36, UNLESS NOTED OTHERWISE
   E. ELECTRODES: SERIES E70
   F. RECTANGULAR HSS: ASTM A500, GRADE C, FY = 50 KSI
   G. STRUCTURAL PIPES: ASTM A53, GRADE B, FY = 35 KSI
   H. SHEAR STUDS: ASTM A108, FY = 60 KSI

2. SPECIFICATIONS:
   A. WELDING PERSONNEL AND PROCEDURES ARE TO BE QUALIFIED PER AWS D1.1. UNLESS SPECIFICALLY SHOWN OTHERWISE, DESIGN, FABRICATION AND ERECTION TO BE GOVERNED BY THE LATEST REVISIONS OF:
      1. AISC SPECIFICATION FOR THE DESIGN, FABRICATION AND ERECTION OF STRUCTURAL STEEL FOR BUILDINGS.
      2. AISC CODE OF STANDARD PRACTICE.
      3. STRUCTURAL WELDING CODE, AWS D1.1 OF THE AMERICAN WELDING SOCIETY.
      4. SPECIFICATIONS FOR STRUCTURAL JOINTS USING ASTM A325 OR A490 BOLTS.

3. SUBMITTALS:
   A. SUBMIT SHOP DRAWINGS FOR REVIEW AND APPROVAL WHICH INCLUDE ERECTION PLANS, CONNECTION DETAILS, AND SHOP DETAILS INDICATING CUTS, COPES, CAMBERS, CONNECTIONS, HOLES, THREADED FASTENER TYPES AND SIZES, AND SIZES AND LENGTHS OF WELDS.
   B. INDICATE MATERIAL SPECIFICATIONS, STRENGTHS, AND FINISHES.

4. CONNECTIONS:
   A. FIELD CONNECTIONS ARE TO BE BOLTED, EXCEPT AS INDICATED OTHERWISE. SHOP CONNECTIONS MAY BE WELDED OR BOLTED.
   B. CONNECTIONS ARE TO BE DESIGNED BY THE FABRICATOR TO DEVELOP EITHER 110% OF THE FULL UNIFORM LOAD CAPACITY OF THE MEMBER (55% EACH END), OR THE FORCES SHOWN ON THE PLANS. MINIMUM CONNECTION CAPACITY TO BE 15 KIPS. FOLLOW INSTRUCTIONS ON DRAWINGS FOR GENERAL ARRANGEMENT OR PARTICULAR DETAILS.

5. COATINGS:
   A. DO NOT PAINT STEEL OR ANCHOR RODS WHICH WILL BE ENCASED IN CONCRETE OR MASONRY.
   B. PAINT ALL INTERIOR EXPOSED STEEL (INCLUDING INTERIOR LINTELS) WITH TWO COATS OF RED-OXIDE PRIMER.
   C. HOT-DIP GALVANIZE ALL EXTERIOR STEEL (INCLUDING PERIMETER LINTELS).
   D. PROVIDE A FIELD-APPLIED COAT OF ASPHALT-MASTIC PAINT FOR ALL BELOW-GRADE STEEL (INCLUDING ANCHOR RODS, NUTS, WASHERS, BASE PLATES, AND THE BELOW-GRADE PORTION OF COLUMNS) WHICH IS NOT FULLY ENCASED IN CONCRETE.
   E. INTERIOR NON-EXPOSED STEEL NEED NOT BE PRIME PAINTED.

6. MISCELLANEOUS:
   A. PROVIDE HOLES FOR OTHERS. IF OPENING IS NOT SHOWN ON THE STRUCTURAL DRAWINGS, OBTAIN PRIOR APPROVAL.
   B. STEEL SUPPORTING OR CONNECTING TO MECHANICAL AND OTHER EQUIPMENT AND ROOF OPENINGS AS SHOWN ON ARCHITECTURAL, MECHANICAL AND/OR ON STRUCTURAL DRAWINGS IS SHOWN FOR BIDDING PURPOSES ONLY. CONTRACTOR IS TO RECONCILE EXACT SIZE AND LOCATION WITH MECHANICAL AND OTHER REQUIREMENTS BEFORE PROCEEDING WITH THIS WORK.
   C. GROUT UNDER BEARING PLATES TO BE NON-METALLIC, NON-SHRINKING TYPE.
   D. STEEL BELOW GRADE TO BE PROTECTED BY A MINIMUM OF 3" OF CONCRETE, 4" OF SOLID MASONRY, OR A FIELD-APPLIED COAT OF ASPHALT-MASTIC PAINT.
   E. PROVIDE 1/4" THICK SETTING PLATES FOR ALL BEAMS AND BEAM LINTELS BEARING ON MASONRY OR CONCRETE WHICH DO NOT REQUIRE A THICKER BEARING PLATE.
   F. PROVIDE HEAVY PLATE WASHERS AT ALL ANCHOR RODS.
   G. FINISH ENDS OF ALL COLUMNS, STIFFENERS AND ALL OTHER MEMBERS IN DIRECT BEARING.
   H. PROVIDE BOLT HOLES FOR WOOD NAILERS BOLTED TO BEAMS.
   I. STEEL IN CONTACT WITH PRESSURE-TREATED LUMBER IS TO BE PROTECTED FROM CORROSION FROM PRESERVATIVE CHEMICALS WITH A 20 MIL (MIN.) VAPOR BARRIER. BOLTS AND SCREWS THROUGH PRESSURE-TREATED LUMBER ARE TO BE HOT DIPPED GALVANIZED PER ASTM A153 WITH A MINIMUM G185 COATING OR STAINLESS STEEL WITH CHEMICAL COMPOSITION CONFORMING TO AISI 303/304 OR AISI 316.
   J. SEE ARCHITECTURAL SECTIONS AND DETAILS FOR ALL MISCELLANEOUS STRUCTURAL STEEL NOT OTHERWISE INDICATED IN THE STRUCTURAL DRAWINGS.

7. FIELD QUALITY CONTROL:
   A. INSPECTION AGENCY IS TO PERFORM INSPECTION OF BOLTED CONNECTIONS PER THE REQUIREMENTS OF AISC SPECIFICATION FOR STRUCTURAL JOINTS.

COLD FORMED METAL FRAMING

1. MATERIALS:
   A. COLD-FORMED METAL STUDS AND JOISTS SHOWN ON THE CONTRACT DOCUMENTS ARE DESIGNATED BY "DEPTH", "SHAPE", "WIDTH", AND "THICKNESS" AS FOLLOWS:
      1. DEPTH: 362 (3-5/8"), 600 (6"), 800 (8"), ETC.
      2. SHAPE: S (C-SHAPE), T (TRACK), U (CHANNEL)
      3. WIDTH: 125 (1-1/4"), 162 (1-5/8"), 200 (2"), ETC.
      4. THICKNESS: -43 (18 GA.), -54 (16 GA.), -68 (14 GA.), -97 (12 GA.)
      EXAMPLE: 600S162-54 = 6" C-SHAPE, 1 5/8" FLANGE, 16 GA.
   B. ALL 18 GA AND LIGHTER STUDS TO BE 33 KSI MATERIAL; ALL 16 GA AND HEAVIER STUDS TO BE 50 KSI MATERIAL.
   C. ALL TRACKS AND ACCESSORIES: FY = 33 KSI MINIMUM.

2. SPECIFICATIONS:
   A. WELDING PERSONNEL AND PROCEDURES ARE TO BE QUALIFIED PER AWS. DESIGN, FABRICATION, AND ERECTION TO BE GOVERNED BY LATEST REVISIONS OF:
      1. AISI "SPECIFICATION OF THE DESIGN OF COLD-FORMED STEEL STRUCTURAL MEMBERS."
      2. STRUCTURAL WELDING CODE, AWS D1.3 OF THE AMERICAN WELDING SOCIETY.

3. SUBMITTALS:
   A. SUBMIT MANUFACTURER'S STANDARD PRODUCT DATA AND INSTALLATION INSTRUCTIONS FOR EACH TYPE OF COLD-FORMED METAL FRAMING AND ACCESSORY REQUIRED.

4. CONNECTIONS:
   A. FIELD CONNECTIONS MAY BE EITHER WELDED OR SCREWED, EXCEPT AS SPECIFICALLY DETAILED OTHERWISE.
   B. WELD SIZE TO BE 1/8" WITH AWS TYPE 6013 OR 7014 ROD.
   C. EXCEPT AS NOTED OTHERWISE, MECHANICAL FASTENERS TO BE SELF TAPPING #10-16 SCREWS.

5. FINISH:
   A. ALL MATERIAL TO BE GALVANIZED COATED IN ACCORDANCE WITH ASTM A525 G-60.
   B. TOUCH-UP FIELD WELDS WITH ZINC RICH PAINT.

6. MISCELLANEOUS:
   A. ALL FIELD CUTTING TO BE PERFORMED WITH A SAW.
   B. TRACKS TO BE SECURELY ANCHORED TO SUPPORTING STRUCTURE WITH WELD OR SCREW AT EACH SIDE OF TRACKS.
   C. PROVIDE HORIZONTAL BRIDGING AT 4'-0" O.C. MAX. FOR ALL LOADBEARING STUD WALLS UNLESS NOTED OTHERWISE.
   D. JOISTS TO BE LOCATED DIRECTLY OVER BEARING WALL STUDS UNLESS A LOAD DISTRIBUTION MEMBER IS PROVIDED AT THE TOP TRACK.
   E. BEARING WALL STUDS ARE TO BE LOCATED DIRECTLY BELOW JOIST OR ROOF TRUSS BEARING UNLESS A LOAD DISTRIBUTION MEMBER IS PROVIDED AT THE TOP TRACK.
   F. END BLOCKING OR CONTINUOUS TRACK IS TO BE PROVIDED WHERE JOIST ENDS ARE NOT OTHERWISE RESTRAINED FROM ROTATION.
   G. WEB PUNCH-OUTS FOR BEAMS, JOISTS, AND RAFTERS ARE TO BE LOCATED A MINIMUM OF 10" AWAY FROM BEARING AND CONCENTRATED LOAD LOCATIONS. IF A PUNCH-OUT FALLS WITHIN 10" OF THESE LOCATIONS, PROVIDE REINFORCEMENT FOR THE MEMBER AS REQUIRED. ALTERNATELY, UN-PUNCHED SECTIONS MAY BE PROVIDED FOR BEAMS, JOISTS, AND RAFTERS.
   H. EACH MEMBER OF MULTIPLE MEMBER COLUMNS ARE TO BE SCREWED TOGETHER USING FULL-HEIGHT TRACKS AND #10 SCREWS AT 12" O.C. ALTERNATELY, MULTIPLE MEMBER COLUMNS MAY BE WELDED TOGETHER WITH A 1" WELD AT 18" ON CENTER, EACH SIDE, EACH PIECE, FOR THE FULL LENGTH OF THE COLUMN.

STRUCTURAL LUMBER

1. MATERIALS:
   A. STRUCTURAL LUMBER: ALL DESIGN VALUES PER 2015 NFPA NATIONAL DESIGN SPECIFICATION. ANY SUBSTITUTIONS ARE TO MEET MINIMUM DESIGN VALUES OF ABOVE MEMBERS. UNLESS NOTED OTHERWISE FRAMING MATERIALS SHALL BE:
      1) BEAMS, HEADERS, JOISTS, AND RAFTERS - SPRUCE-PINE-FIR NO.1/NO.2 AS GRADED BY NLGA
      2) WALL STUDS 2x4 OR 2x6 - SPRUCE-PINE-FIR NO.1/NO.2 GRADE AS GRADED BY NLGA
      3) MICRO=LAM (M=L) OR LAMINATED VENEER LUMBER (LVL): Fb = 2,600 PSI, Fv = 285 PSI, Fc (PERP.) = 750 PSI, E = 1,900 KSI.
      4) PREFABRICATED WOOD I-JOIST — CAPACITIES AND DESIGN PROVISIONS SHALL BE AS ESTABLISHED AND MONITORED IN ACCORDANCE WITH ASTM D5055.
      5) DECKING AND SHEATHING (OSB OR PLYWOOD):
         ROOFS: 19/32 (5/8" NOMINAL) APA RATED SHEATHING, 40/20, EXPOSURE 1
         WALL SHEATHING: 7/16" APA RATED SHEATHING, WALL-24, EXPOSURE 1
   B. ALL LUMBER IN CONTACT WITH CONCRETE, MASONRY, GROUND/SOIL, OR USED IN CONDITIONS WITH MOISTURE PRESENT, IS TO BE PRESSURE-TREATED TO RESIST DECAY. PRESERVATIVES USED FOR PRESSURE TREATMENT ARE TO BE ALKALINE COPPER QUAT, ACQ-C OR ACQ-D. OTHER PRESERVATIVES PROPOSED FOR USE ARE TO BE SUBMITTED FOR REVIEW PRIOR TO ERECTION OR INSTALLATION ON THE PROJECT.

2. SPECIFICATIONS:
   A. UNLESS SPECIFICALLY SHOWN OTHERWISE, DESIGN, FABRICATION AND ERECTION ARE TO BE GOVERNED BY THE LATEST REVISIONS OF:
      1. NATIONAL DESIGN SPECIFICATION FOR WOOD CONSTRUCTION.
      2. U.S. PRODUCT STANDARD PS-1 FOR CONSTRUCTION AND INDUSTRIAL PLYWOOD.
      3. APA PS 2-18, PERFORMANCE STANDARD FOR WOOD STRUCTURAL PANELS.
      4. APA DESIGN/CONSTRUCTION GUIDE - RESIDENTIAL AND COMMERCIAL.

3. CONNECTIONS:
   A. CONNECTIONS FOR WOOD MEMBERS SHALL BE MINIMALLY FASTENED AS PRESCRIBED IN TABLE 2304.10.1 OF THE REFERENCED BUILDING CODE UNLESS DETAILED OTHERWISE. ALL NAILS ARE TO BE COMMON WIRE NAILS, UNLESS SPECIFICALLY NOTED OTHERWISE.
   B. JOISTS TO BEAMS OR JOISTS TO TRUSSES - 16 GA. STD. JOIST HANGERS, UNLESS SHOWN OTHERWISE. BEAMS TO BEAMS - 16 GA. BEAM HANGERS, UNLESS SHOWN OTHERWISE.
   C. ALL HANGERS, STRAPS, CAPS, BASES, HOLDOWNS, TIES OR OTHER CONNECTORS IN CONTACT WITH PRESSURE-TREATED LUMBER ARE TO BE BATCH/POST HOT DIPPED GALVANIZED PER ASTM A123 WITH A MINIMUM G185 COATING OR STAINLESS STEEL WITH CHEMICAL COMPOSITION CONFORMING TO AISI 303/304 OR AISI 316.
   D. ALL FASTENERS INCLUDING NAILS, ANCHOR RODS, POWDER ACTUATED FASTENERS, SCREWS, BOLTS, AND THREADED RODS, IN CONTACT WITH PRESSURE TREATED LUMBER ARE TO BE HOT DIPPED GALVANIZED PER ASTM A153 WITH A MINIMUM G185 COATING OR STAINLESS STEEL WITH CHEMICAL COMPOSITION CONFORMING TO AISI 303/304 OR AISI 316. FASTENERS AND CONNECTORS ARE TO BE OF THE SAME MATERIAL, STAINLESS STEEL OR HOT DIPPED GALVANIZED, DO NOT MIX MATERIALS.
   E. ALL MECHANICAL ANCHORS INCLUDING WEDGE ANCHORS AND SLEEVE ANCHORS IN CONTACT WITH PRESSURE TREATED LUMBER ARE TO BE STAINLESS STEEL WITH CHEMICAL COMPOSITION CONFORMING TO AISI 303/304 OR AISI 316.
   F. SHEATHING TO FRAMING:
      1. ROOFS - USE 10d NAILS AT 6" ON CENTER AT PANEL EDGES AND 12" ON CENTER AT INTERMEDIATE SUPPORTS (UNO).
      2. STUD WALLS - USE 8d COMMON OR GALVANIZED BOX NAILS AT 6" ON CENTER AT PANEL EDGES AND 12" ON CENTER AT INTERMEDIATE SUPPORTS (UNO). SEE SHEARWALL SCHEDULES FOR ADDITIONAL FASTENING REQUIREMENTS.
      3. CFMF — USE 1-5/16" LONG #10-16 PILOT POINT SCREWS WITH WINGS.
      4. GYPSUM-SHEATHED WALLS - USE 6d COOLER OR No. 6 x 1-1/4" TYPE S OR W SCREWS AT 7" ON CENTER AT PANEL EDGES AND 7" ON CENTER AT INTERMEDIATE SUPPORTS (UNO).
   G. TRUSS TO WALL OR RAFTERS TO WALL - STANDARD HOLDOWN ANCHORS AT EACH BEARING POINT. ADDITIONAL ANCHORS MAY BE REQUIRED BASED UPON FINAL LAYOUT AND DESIGN BY THE TRUSS MANUFACTURER DURING THE SHOP DRAWING PROCESS.

4. MISCELLANEOUS:
   A. SOLID BLOCKING AT ALL JOIST AND RAFTER BEARINGS.
   B. PROVIDE SOLID BLOCKING AT MID-HEIGHT OF WALLS FOR EXTERIOR STUD WALLS AND ALL WALL FRAMING WHICH IS NOT SHEATHED ON EACH SIDE WITH GYPSUM OR WOOD SHEATHING.
   C. EACH MEMBER OF MULTIPLE MEMBER BEAMS AND COLUMNS ARE TO BE NAILED TOGETHER WITH 2 ROWS OF 10d NAILS AT 6" ON CENTER, STAGGERED, THE FULL LENGTH OF THE MEMBER. FOR MULTIPLE MEMBER LVL OR LSL PRODUCTS, FOLLOW MINIMUM FASTENING REQUIREMENTS OF THE MANUFACTURER.

ENGINEERED WOOD TRUSSES

1. MATERIALS:
   A. LUMBER: AS REQUIRED BY THE TRUSS MANUFACTURE, KD 15 PERCENT MOISTURE CONTENT.
   B. CONNECTIONS: ALL INTERNAL TRUSS CONNECTIONS ARE TO BE DESIGNED BY THE TRUSS MANUFACTURER. CONNECTORS ARE TO BE DEFORMED PLATE TYPE, OF MINIMUM 20 GAUGE GALVANIZED STEEL SHEET. ALL JOINTS ARE TO BE DESIGNED USING METHODS AS SET FORTH IN TPI STANDARDS.
   C. ALL HANGERS, STRAPS, CAPS, BASES, HOLDOWNS, TIES OR OTHER CONNECTORS IN CONTACT WITH PRESSURE-TREATED LUMBER ARE TO BE BATCH/POST HOT DIPPED GALVANIZED PER ASTM A123 WITH A MINIMUM G185 COATING OR STAINLESS STEEL WITH CHEMICAL COMPOSITION CONFORMING TO AISI 303/304 OR AISI 316.
   D. ALL FASTENERS INCLUDING NAILS, ANCHOR RODS, POWDER ACTUATED FASTENERS, SCREWS, BOLTS, AND THREADED RODS, IN CONTACT WITH PRESSURE TREATED LUMBER ARE TO BE HOT DIPPED GALVANIZED PER ASTM A153 WITH A MINIMUM G185 COATING OR STAINLESS STEEL WITH CHEMICAL COMPOSITION CONFORMING TO AISI 303/304 OR AISI 316. FASTENERS AND CONNECTORS ARE TO BE OF THE SAME MATERIAL, STAINLESS STEEL OR HOT DIPPED GALVANIZED, DO NOT MIX MATERIALS.
   E. SPECIFICATIONS AND REFERENCE STANDARDS: UNLESS SPECIFICALLY SHOWN OTHERWISE, DESIGN, FABRICATION, ERECTION, HANDLING AND BRACING REQUIREMENTS ARE TO BE GOVERNED BY THE LATEST REVISIONS OF:
      1. NATIONAL DESIGN SPECIFICATIONS FOR STRESS-GRADE LUMBER AND ITS FASTENINGS.
      2. TIMBER CONSTRUCTION STANDARDS.
      3. DESIGN SPECIFICATIONS FOR LIGHT METAL PLATE CONNECTED WOOD TRUSSES.
      4. TRUSS PLATE INSTITUTE PUBLICATION-BTW BRACING WOOD TRUSSES: COMMENTARY AND RECOMMENDATIONS EXCEPT AS NOTED BELOW.

2. DESIGN:
   A. ALL TRUSSES ARE TO BE DESIGNED BY THE TRUSS MANUFACTURER FOR THE FOLLOWING LOADS:

ROOFS:	
- TOP CHORD DEAD LOAD:	15 PSF
- TOP CHORD LIVE LOAD:	20 PSF
- BOTTOM CHORD DEAD LOAD:	10 PSF
- BOTTOM CHORD LIVE LOAD:	0 PSF
LIVE LOAD DEFLECTION LIMIT:	L/300
TOTAL LOAD DEFLECTION LIMIT:	L/240

   ADDITIONAL DEAD LOADS:
   TRUSS DESIGNER SHALL INCLUDE ADDITIONAL WEIGHT OF DEAD LOADS APPLIED TO TRUSSES FROM OVER-FRAMED AREAS INDICATED ON PLANS.

   SNOW LOADS:
   IN ACCORDANCE WITH ASCE 7-10 USING THE CRITERIA DEFINED IN THE :DESIGN LOADSJ SECTION OF THE GENERAL STRUCTURAL NOTES. SNOW LOADS ARE TO INCLUDE THE EFFECTS OF :UNBALANCED SNOW LOADS FOR HIP AND GABLE ROOFSJ.

   WIND LOADS:
   IN ACCORDANCE WITH ASCE 7-10 USING THE CRITERIA DEFINED IN THE "DESIGN LOADS" SECTION OF THE GENERAL STRUCTURAL NOTES. TRUSSES ARE TO BE DESIGNED FOR "COMPONENTS AND CLADDING" WIND LOADS UNLESS NOTED OTHERWISE.

   OTHER LATERAL LOADS:
   SEE PLANS AND DETAILS FOR DRAG STRUT LOCATIONS AND LOADING REQUIREMENTS.

   SPECIAL LOADS:
   SEE PLANS AND ELEVATIONS FOR ADDITIONAL LOADS TO BE CONSIDERED IN THE TRUSS DESIGN.

   B. WHERE TRUSSES ARE REQUIRED TO FRAME INTO OTHER TRUSSES, DESIGN OF THE CONNECTIONS ARE TO BE THE RESPONSIBILITY OF THE TRUSS SUPPLIER. THE TRUSS SUPPLIER IS TO MAKE NECESSARY PROVISIONS IN THE SUPPORTING TRUSS TO ACCEPT THE TYPE OF HANGER REQUIRED.
   C. THE DESIGN OF ALL WEB MEMBER PERMANENT BRACING REQUIRED FOR THE STRUCTURAL ADEQUACY OF THE TRUSSES, IS TO BE THE SOLE RESPONSIBILITY OF THE TRUSS SUPPLIER.
   D. ADDITIONAL PERMANENT BRACE SIZES AND CONNECTIONS, NOT PROVIDED BY THE SHEATHING SHOWN ON THE CONSTRUCTION DRAWINGS, ARE TO BE THE SOLE RESPONSIBILITY OF THE TRUSS SUPPLIER. THIS BRACING CAN INCLUDE, BUT IS NOT LIMITED TO, TOP CHORD BRACING FOR TRUSSES WITH PIGGY-BACKS, AND INTERMEDIATE BRACES FOR GABLE TRUSS WEB MEMBERS.

3. SUBMITTALS:
   A. TRUSS DESIGNS ARE TO BE SUBMITTED FOR REVIEW PRIOR TO FABRICATION. TRUSS SUBMITTAL IS TO INCLUDE THE FOLLOWING INFORMATION:
      1. DESIGN INFORMATION FOR EACH TYPE OF TRUSS SUPPLIED.
      2. LAYOUT DRAWING INDICATING LOCATION OF EACH SPECIFIC TRUSS TYPE AND ANY PERMANENT HORIZONTAL BRACING MEMBERS.
      3. PERMANENT MEMBER BRACE LOCATIONS, BRACE SIZES, AND CONNECTIONS.
      4. TRUSS HANGER TYPE AND LOCATION, FOR ALL TRUSSES FRAMING INTO TRUSSES.
      5. TRUSS DESIGNS AND LAYOUT DRAWING STAMPED BY A REGISTERED PROFESSIONAL ENGINEER, IN THE STATE OF PROJECT LOCATION.
   B. SUBMITTALS WHICH DO NOT INCLUDE THE ABOVE LISTED INFORMATION WILL BE RETURNED TO THE CONTRACTOR PRIOR TO REVIEW.

4. MISCELLANEOUS:
   A. ALL GIRDER TRUSSES ARE TO BE 2-PLY MINIMUM.
   B. UNLESS SPECIFICALLY NOTED OTHERWISE ON THE APPROVED TRUSS SHOP DRAWINGS, ALL MEMBERS OF MULTIPLE TRUSSES ARE TO BE NAILED TOGETHER WITH 10d COMMON NAILS AT 8" O.C., FOR DOUBLE TRUSSES, OR WITH 16d COMMON NAILS AT 8" O.C. FROM EACH SIDE, FOR TRIPLE TRUSSES.

POST-INSTALLED ANCHOR SYSTEMS

1. GENERAL:
   A. LISTED ANCHOR PRODUCTS PROVIDED BELOW ARE NOT TO BE USED AS INTERCHANGEABLE PRODUCTS. EACH ANCHOR HAS DEFINED CAPACITIES BASED UPON TESTED PERFORMANCE WITH APPLICABLE SAFETY FACTORS AND WILL VARY ACROSS MANUFACTURERS. TYPES OF ANCHORS INDICATED THROUGHOUT THE DESIGN DOCUMENTS ARE DETAILED FOR THEIR SPECIFIC PURPOSE AND CAPACITY. SUBSTITUTION OF ANCHORS FROM THOSE SPECIFIED ARE ONLY ALLOWED AFTER ENGINEER REVIEW AND APPROVAL OR AMENDMENT FROM WRITTEN REQUEST BY THE CONTRACTOR.
   B. PROVIDE ANCHORAGE MATCHING MANUFACTURER, TYPE, DIAMETER, EMBEDMENT, AND BASE MATERIAL AS INDICATED IN THE DOCUMENTS.
   C. ALL POST-INSTALLED ANCHORS TO BE HAMMER DRILLED. FOLLOW ALL HOLE CLEANING AND INSTALLATION INSTRUCTIONS AS STIPULATED BY THE ANCHOR MANUFACTURER. FOLLOW ALL OSHA GUIDELINES FOR CONCRETE DRILLING AS IT PERTAINS TO SILICA DUST.
   D. INSTALLATION OF ADHESIVE ANCHORS MUST BE PERFORMED BY PERSONNEL TRAINED TO INSTALL ADHESIVE ANCHORS THROUGH MANUFACTURER TRAINING PROGRAMS.
   E. INSTALLATION OF ADHESIVE ANCHORS IN THE HORIZONTAL OR UPWARDLY INCLINED ORIENTATION AND WHERE SUPPORTING SUSTAINED TENSION LOADS SHALL BE INSTALLED BY CERTIFIED PERSONNEL BY ACI/CRSI INSTALLATION PROGRAMS.
   F. MINIMUM CONCRETE AGE FOR POST-INSTALLED ADHESIVE ANCHORS SHALL BE NOT LESS THAN 28 DAYS.
   G. ALL ANCHORS IN CONTACT WITH PRESSURE TREATED LUMBER ARE TO BE HOT DIPPED GALVANIZED PER ASTM A153 WITH A MINIMUM G185 COATING OR STAINLESS STEEL WITH CHEMICAL COMPOSITION CONFORMING TO AISI 303/304 OR AISI 316. FASTENERS AND CONNECTORS ARE TO BE OF THE SAME MATERIAL, STAINLESS STEEL OR HOT DIPPED GALVANIZED, DO NOT MIX MATERIALS.
   H. MINIMUM EMBEDMENT FOR MECHANICAL EXPANSION ANCHORAGE SYSTEMS IS 7 BOLT DIAMETERS. MINIMUM EMBEDMENT FOR SCREW ANCHORAGE AND ADHESIVE ANCHORAGE SYSTEMS IS 9 BOLT DIAMETERS.

2. ANCHORAGE TO CONCRETE
   A. ACCEPTABLE MECHANICAL EXPANSION ANCHORAGE SYSTEMS:
      1. DEWALT POWER STUD +SDI WEDGE EXPANSION ANCHOR
      2. HILTI KWIK BOLT 3 EXPANSION ANCHOR
      3. HILTI KWIK BOLT TZ EXPANSION ANCHOR
      4. SIMPSON STRONG-BOLT 2 WEDGE EXPANSION ANCHOR
   B. ACCEPTABLE MECHANICAL SLEEVE ANCHORAGE SYSTEMS: (MAY NOT BE USED TO SECURE MAIN BUILDING FRAME COMPONENTS)
      1. DEWALT LOK-BOLT AS SLEEVE ANCHOR
      2. HILTI HLC SLEEVE ANCHOR
      3. SIMPSON SLEEVE-ALL SLEEVE ANCHOR
   C. ACCEPTABLE MECHANICAL SCREW ANCHORAGE SYSTEMS:
      1. DEWALT SCREW-BOLT+
      2. HILTI KWIK HUS-EZ SCREW ANCHOR
      3. SIMPSON TITEN HD SCREW ANCHOR
   D. ACCEPTABLE ADHESIVE ANCHORAGE SYSTEMS:
      1. DEWALT AC200+ ADHESIVE FOR REINFORCING BAR
      2. DEWALT PURE50+ ADHESIVE FOR THREADED ROD AND REINFORCING BAR
      3. DEWALT PURE110+ ADHESIVE FOR THREADED ROD AND REINFORCING BAR
      4. HILTI HIT-HY 200 ADHESIVE FOR THREADED ROD, REINFORCING BAR, AND HILTI SPECIFIC ROD AND INSERT SYSTEMS.
      5. HILTI HIT-RE 500 ADHESIVE FOR THREADED ROD AND REINFORCING BAR.
      6. HILTI HIT-RE 100 ADHESIVE FOR THREADED ROD AND REINFORCING BAR.
      7. SIMPSON AT-XP ADHESIVE FOR THREADED ROD AND REINFORCING BAR.
      8. SIMPSON SET-3G ADHESIVE FOR THREADED ROD AND REINFORCING BAR.

3. ANCHORAGE TO CONCRETE MASONRY OR BRICK MASONRY AS INDICATED:
   A. FOLLOW ALL MANUFACTURERS INSTALLATION INSTRUCTIONS IN REGARD TO LOCATION OF ANCHORS AWAY FROM HEAD JOINTS, MINIMUM EDGE DISTANCES, AND MINIMUM ANCHOR SPACING.
   B. ACCEPTABLE MECHANICAL EXPANSION ANCHORAGE SYSTEMS:
      1. DEWALT POWER STUD +SDI WEDGE EXPANSION ANCHOR IN GROUT FILLED OR SOLID CONCRETE MASONRY
      2. HILTI KWIK BOLT 3 EXPANSION ANCHOR IN GROUT FILLED OR SOLID CONCRETE MASONRY
      3. SIMPSON STRONG-BOLT 2 WEDGE EXPANSION ANCHOR IN GROUT FILLED OR SOLID CONCRETE MASONRY
   C. ACCEPTABLE MECHANICAL SLEEVE ANCHORAGE SYSTEMS: (MAY NOT BE USED TO SECURE MAIN BUILDING FRAME COMPONENTS)
      1. DEWALT LOK-BOLT AS SLEEVE ANCHOR IN GROUT FILLED, SOLID, OR HOLLOW CONCRETE MASONRY, AND SOLID BRICK MASONRY
      2. HILTI HLC SLEEVE ANCHOR IN GROUT FILLED, SOLID, OR HOLLOW CONCRETE MASONRY, AND SOLID BRICK MASONRY
      3. SIMPSON SLEEVE-ALL SLEEVE ANCHOR IN GROUT FILLED OR SOLID CONCRETE MASONRY
   D. ACCEPTABLE MECHANICAL SCREW ANCHORAGE SYSTEMS:
      1. HILTI KWIK HUS-EZ SCREW ANCHOR IN GROUT FILLED OR SOLID CONCRETE MASONRY
      2. DEWALT SCREW-BOLT+ SCREW ANCHOR IN GROUT FILLED OR SOLID CONCRETE MASONRY AND BRICK MASONRY
      3. SIMPSON TITEN HD SCREW ANCHOR IN GROUT FILLED, SOLID, OR HOLLOW CONCRETE MASONRY
   E. ACCEPTABLE ADHESIVE ANCHORAGE SYSTEMS:
      1. DEWALT AC100+ GOLD FOR THREADED ROD AND REINFORCING BAR IN GROUT FILLED MASONRY CONSTRUCTION. USE WITH SCREEN TUBES IN HOLLOW MASONRY CONSTRUCTION.
      2. HILTI HIT-HY 270 ADHESIVE FOR THREADED ROD, REINFORCING BAR, AND HILTI SPECIFIC ROD AND INSERT SYSTEMS IN GROUT FILLED OR SOLID CONCRETE MASONRY CONSTRUCTION. USE WITH SCREEN TUBES IN HOLLOW MASONRY, MULIT-WYTHE MASONRY, OR BRICK WITH HOLES CONSTRUCTION.
      3. SIMPSON SET-XP ADHESIVE FOR THREADED ROD AND REINFORCING BAR IN GROUT FILLED, SOLID, AND HOLLOW CONCRETE MASONRY.

IN ACCORDANCE WITH CHAPTER 17 OF THE REFERENCE BUILDING CODE, THE OWNER SHALL EMPLOY INSPECTION AGENCIES TO PERFORM SPECIAL INSPECTIONS DURING CONSTRUCTION INCLUDING INSPECTIONS OF SHOP-FABRICATED ITEMS WHEN APPLICABLE. ALL INSPECTION AGENCIES, INCLUDING FABRICATION FACILITIES, WHEN REQUIRED, SHALL BE QUALIFIED AND APPROVED BY THE BUILDING OFFICIAL. REFER TO OTHER DISCIPLINES FOR SPECIAL INSPECTIONS OF NON-STRUCTURAL SYSTEMS.

TABLE 1 STATEMENT OF SPECIAL INSPECTIONS FOR STRUCTURAL DISCIPLINE

REQUIRED SPECIAL INSPECTIONS AND TESTS FOR SOILS		
TYPE	CONTINUOUS SPECIAL INSPECTION	PERIODIC SPECIAL INSPECTION
1. VERIFY MATERIALS BELOW SHALLOW FOUNDATIONS ARE ADEQUATE TO ACHIEVE THE DESIGN BEARING CAPACITY.	---	X
2. VERIFY EXCAVATIONS ARE EXTENDED TO PROPER DEPTH AND HAVE REACHED PROPER MATERIAL.	---	X
3. PERFORM CLASSIFICATION AND TESTING OF COMPACTED FILL MATERIALS.	---	X
4. VERIFY USE OF PROPER MATERIALS, DENSITIES, AND LIFT THICKNESSES DURING PLACEMENT AND COMPACTION OF COMPACTED FILL.	X	---
5. PRIOR TO PLACEMENT OF COMPACTED FILL, INSPECT SUBGRADE AND VERIFY THAT SITE HAS BEEN PREPARED PROPERLY.	---	X

REQUIRED SPECIAL INSPECTIONS AND TESTS OF CONCRETE CONSTRUCTION		
TYPE	CONTINUOUS SPECIAL INSPECTION	PERIODIC SPECIAL INSPECTION
1. INSPECT REINFORCEMENT AND VERIFY PLACEMENT.	---	X
2. INSPECT ANCHORS CAST IN CONCRETE.	---	X
3. INSPECT ANCHORS POST-INSTALLED IN HARDENED CONCRETE MEMBERS.		
A. ADHESIVE ANCHORS INSTALLED IN HORIZONTALLY OR UPWARDLY INCLINED ORIENTATIONS TO RESIST SUSTAINED TENSION LOADS.	X	---
B. MECHANICAL ANCHORS AND ADHESIVE ANCHORS NOT DEFINED IN 4A.	---	X
4. VERIFY USE OF REQUIRED DESIGN MIX.	---	X
5. PRIOR TO CONCRETE PLACEMENT, FABRICATE SPECIMENS FOR STRENGTH TESTS, PERFORM SLUMP AND AIR CONTENT TESTS, AND DETERMINE THE TEMPERATURE OF THE CONCRETE.	X	---
6. INSPECT CONCRETE PLACEMENT FOR PROPER APPLICATION TECHNIQUES.	X	---
7. VERIFY MAINTENANCE OF SPECIFIED CURING TEMPERATURE AND TECHNIQUES.	---	X
8. INSPECT FORMWORK FOR SHAPE, LOCATION AND DIMENSIONS OF THE CONCRETE MEMBER BEING FORMED.	---	X

'LEVEL B' QUALITY ASSURANCE REQUIRED SPECIAL INSPECTIONS AND TESTS OF MASONRY CONSTRUCTION		
MINIMUM TESTS		
VERIFICATION OF SLUMP FLOW AND VISUAL STABILITY INDEX (VSI) AS DELIVERED TO THE PROJECT SITE IN ACCORDANCE WITH ARTICLE 1.5.B.1.b.3 FOR SELF CONSOLIDATING GROUT		
VERIFICATION OF f'_m AND f'_{AAC} IN ACCORDANCE WITH ARTICLE 1.4B PRIOR TO CONSTRUCTION, EXCEPT WHERE SPECIFICALLY EXEMPTED BY THE CODE.		
MINIMUM SPECIAL INSPECTION		
TYPE	CONTINUOUS SPECIAL INSPECTION	PERIODIC SPECIAL INSPECTION
1. VERIFY COMPLIANCE WITH THE APPROVED SUBMITTALS.	---	X
2. AS MASONRY CONSTRUCTION BEGINS, VERIFY THAT THE FOLLOWING ARE IN COMPLIANCE:		
A. PROPORTIONS OF SITE-PREPARED MORTAR.	---	X
B. CONSTRUCTION OF MORTAR JOINTS.	---	X
C. LOCATION OF REINFORCEMENT AND CONNECTORS.	---	X
3. PRIOR TO GROUTING, VERIFY THAT THE FOLLOWING ARE IN COMPLIANCE:		
A. GROUT SPACE.	---	X
B. GRADE, TYPE, AND SIZE OF REINFORCEMENT AND ANCHOR BOLTS.	---	X
C. PLACEMENT OF REINFORCEMENT AND CONNECTORS.	---	X
D. PROPORTIONS OF SITE-PREPARED GROUT.	---	X
E. CONSTRUCTION OF MORTAR JOINTS.	---	X
4. VERIFY DURING CONSTRUCTION:		
A. SIZE AND LOCATION OF STRUCTURAL ELEMENTS.	---	X
B. TYPE, SIZE, AND LOCATION OF ANCHORS, INCLUDING OTHER DETAILS OF ANCHORAGE OF MASONRY TO STRUCTURAL MEMBERS, FRAMES, OR OTHER CONSTRUCTION.	---	X
C. PREPARATION, CONSTRUCTION, AND PROTECTION OF MASONRY DURING COLD WEATHER (TEMPERATURE BELOW 40° F) OR HOT WEATHER (TEMPERATURE ABOVE 90° F)	---	X
D. PLACEMENT OF GROUT.	---	X
5. OBSERVE PREPARATION OF GROUT SPECIMENS, MORTAR SPECIMENS, AND/OR PRISMS.	---	X

REQUIRED SPECIAL INSPECTIONS AND TESTS OF COLD-FORMED STEEL — LIGHT FRAME CONSTRUCTION		
TYPE	CONTINUOUS SPECIAL INSPECTION	PERIODIC SPECIAL INSPECTION
1. SCREW ATTACHMENT, BOLTING, ANCHORING, AND OTHER FASTENING OF ELEMENTS OF THE MAIN WINDFORCE-RESISTING SYSTEM, INCLUDING SHEAR WALLS, BRACES, DIAPHRAGMS, COLLECTORS (DRAG STRUTS) AND HOLD-DOWNS.	---	X

REQUIRED SPECIAL INSPECTIONS AND TESTS OF WOOD CONSTRUCTION		
TYPE	CONTINUOUS SPECIAL INSPECTION	PERIODIC SPECIAL INSPECTION
1. FABRICATED LOAD BEARING ASSEMBLIES (TRUSSES/COMPOSITE i-JOISTS) CONDUCTED ON THE PREMISES OF THE FABRICATORS SHOP.	---	X
2. METAL-PLATE-CONNECTED TRUSSES SPANNING 60 FEET OR GREATER		
A. VERIFY TEMPORARY RESTRAINT/BRACING AND PERMANENT INDIVIDUAL TRUSS MEMBER RESTRAINT/BRACING INSTALLED.	---	X

TABLE 2 STATEMENT OF SPECIAL INSPECTIONS FOR STRUCTURAL DISCIPLINE

REQUIRED SPECIAL INSPECTIONS AND TESTS OF STRUCTURAL STEEL CONSTRUCTION		
TYPE	PERFORM	OBSERVE
1. INSPECTION TASKS PRIOR TO WELDING:		
A. WELDER QUALIFICATION RECORDS AND CONTINUITY RECORDS.	---	X
B. WELDING PROCEDURE SPECIFICATIONS (WPS) AVAILABLE.	X	---
C. MANUFACTURER CERTIFICATIONS FOR WELDING CONSUMABLES AVAILABLE.	X	---
D. MATERIAL IDENTIFICATION (TYPE/GRADE)	---	X
E. WELDER IDENTIFICATION SYSTEM.	---	X
F. FIT-UP OF GROOVE WELDS (INCLUDING JOINT GEOMETRY):		
• JOINT PREPARATIONS.	---	X
• DIMENSIONS (ALIGNMENT, ROOT OPENING, ROOT FACE, BEVEL.	---	X
• CLEANLINESS (CONDITION OF STEEL SURFACES).	---	X
• TACKING (TACK WELD QUALITY AND LOCATION).	---	X
• BACKING TYPE AND FIT (IF APPLICABLE).	---	X
G. FIT-UP OF CJP GROOVE WELDS OF HSS T-, Y-, AND K-JOINTS WITHOUT BACKING (INCLUDING JOINT GEOMETRY):		
• JOINT PREPARATIONS.	---	X
• DIMENSIONS (ALIGNMENT, ROOT OPENING, ROOT FACE, BEVEL.	---	X
• CLEANLINESS (CONDITION OF STEEL SURFACES).	---	X
• TACKING (TACK WELD QUALITY AND LOCATION).	---	X
H. CONFIGURATION AND FINISH OF ACCESS HOLES.	---	X
I. FIT-UP OF FILLET WELDS:		
• DIMENSIONS (ALIGNMENT, ROOT OPENING, ROOT FACE, BEVEL.	---	X
• CLEANLINESS (CONDITION OF STEEL SURFACES).	---	X
• TACKING (TACK WELD QUALITY AND LOCATION).	---	X
2. INSPECTION TASKS DURING WELDING:		
A. CONTROL AND HANDLING OF WELDING CONSUMABLES.		
• PACKAGING	---	X
• EXPOSURE CONTROL	---	X
B. NO WELDING OVER CRACKED TACK WELDS.	---	X
C. ENVIRONMENTAL CONDITIONS:		
• WIND SPEED WITHIN LIMITS	---	X
• PRECIPITATION AND TEMPERATURE	---	X
D. WPS FOLLOWED:		
• SETTINGS ON WELDING EQUIPMENT	---	X
• TRAVEL SPEED	---	X
• SELECTED WELDING MATERIALS	---	X
• SHIELDING GAS TYPE/FLOW RATE	---	X
• PREHEAT APPLIED	---	X
• INTERPASS TEMPERATURE MAINTAINED (MIN./MAX.)	---	X
• PROPER POSITION (F, V, H, OH)	---	X
• TRAVEL SPEED	---	X
E. WELDING TECHNIQUES		
• INTERPASS AND FINAL CLEANING	---	X
• EACH PASS WITHIN PROFILE LIMITATIONS	---	X
• EACH PASS MEETS QUALITY REQUIREMENTS	---	X
F. PLACEMENT AND INSTALLATION OF STEEL HEADED STUD ANCHORS	X	---
3. INSPECTION TASKS AFTER WELDING:		
A. WELDS CLEANED.	---	X
B. SIZE, LENGTH, AND LOCATION OF WELDS	X	---
C. WELDS MEET VISUAL ACCEPTANCE CRITERIA:		
• CRACK PROHIBITION	X	---
• WELD /BASE-METAL FUSION	X	---
• CRATER CROSS SECTION	X	---
• WELD PROFILES	X	---
• WELD SIZE	X	---
• UNDERCUT	X	---
• POROSITY	X	---
D. ARC STRIKES.	X	---
E. K-AREA	X	---
F. WELD ACCESS HOLES IN ROLLED HEAVY SHAPES AND BUILT-UP HEAVY SHAPES.	X	---
G. BACKING REMOVED AND WELD TABS REMOVED (IF REQUIRED).	X	---
H. REPAIR ACTIVITIES.	X	---
I. DOCUMENT ACCEPTANCE OR REJECTION OF WELDED JOINT OR MEMBER.	X	---
J. NO PROHIBITED WELDS HAVE BEEN ADDED WITHOUT THE APPROVAL OF THE EOR.	---	X
K. NON-DESTRUCTIVE TESTING FOR COMPLETE-JOINT-PENETRATION (CJP) WELDS:		
• UT SHALL BE PERFORMED ON ALL CJP JOINTS IN MATERIAL 5/16" AND GREATER.	X	---
4. INSPECTION TASKS AFTER BOLTING:		
A. DOCUMENT ACCEPTANCE OR REJECTION OF BOLTED CONNECTIONS.	X	---
5. ANCHOR ROD PLACEMENT		
A. INSPECTION DURING PLACEMENT OF ANCHOR RODS AND OTHER EMBEDMENTS SUPPORTING STRUCTURAL STEEL FOR COMPLIANCE WITH THE CONSTRUCTION DOCUMENTS (ANCHOR DIAMETER, GRADE, TYPE, AND LENGTH OF THE ANCHOR ROD OR EMBEDED ITEM AND THE EXTENT OR DEPTH OF EMBEDMENT INTO THE CONCRETE) PRIOR TO PLACEMENT OF CONCRETE.	---	X
6. INSPECTION OF THE FABRICATED STEEL OR ERECTED STEEL FRAME IN COMPLIANCE WITH THE DETAILS SHOWN ON THE CONSTRUCTION DOCUMENTS.	---	X

STRUCTURAL STEEL INSPECTION NOTES:
1. "PERFORM" — THESE TASKS SHALL BE PERFORMED FOR EACH WELDED/BOLTED JOINT OR MEMBER
2. "OBSERVE" — THE INSPECTOR SHALL OBSERVE THESE ITEMS ON A RANDOM BASIS. OPERATIONS NEED NOT BE DELAYED PENDING THESE.

ABBREVIATIONS

AB	ANCHOR BOLT
ADD'L	ADDITIONAL
ALUM	ALUMINUM
ARCH	ARCHITECTURAL
B/ or BO	BOTTOM OF
BFB	BOTTOM FLANGE BRACE
BLDG	BUILDING
BM	BEAM
BOT	BOTTOM
CFMF	COLD-FORMED METAL FRAMING
CFMT	COLD-FORMED METAL TRUSS
CJ	CONTROL OR CONSTRUCTION JOINT
CLR	CLEAR
CM	CONSTRUCTION MANAGER
CMU	CONCRETE MASONRY UNIT
COL	COLUMN
CONC	CONCRETE
CONT	CONTINUOUS
COORD	COORDINATE
CY	CUBIC YARD
DBL	DOUBLE
DEMO	DEMOLISH OR DEMOLITION
DET	DETAIL
DIA	DIAMETER
DIAG	DIAGONAL
DIM	DIMENSION
DWG	DRAWING
EA	EACH
EJ	EXPANSION JOINT
ENG	ENGINEER
EW	EACH WAY
EXP	EXPANSION
FDN	FOUNDATION
FIN	FINISH OR FINISHED
FLR	FLOOR
FTG	FOOTING
FRTW	FIRE-RETARDANT TREATED WOOD
FV	FIELD VERIFY
GA	GAGE
GALV	GALVANIZE
GC	GENERAL CONTRACTOR
HC	HOLLOW CORE
HORIZ	HORIZONTAL
ID	INSIDE DIMENSION
IF	INSIDE FACE
INT	INTERIOR
JST	JOIST
JT	JOINT
KB	KICKER BRACE
L	ANGLE
LGMF	LIGHT GAGE METAL FRAMING
LLBB	LONG LEG BACK-TO-BACK
LLH	LONG LEG HORIZONTAL
LLV	LONG LEG VERTICAL
MAS	MASONRY
MAX	MAXIMUM
MIN	MINIMUM
MTL	METAL
N	NORTH
NA	NOT APPLICABLE
NIC	NOT IN CONTRACT
NOM	NOMINAL
NTS	NOT TO SCALE
OC	ON CENTER
OD	OUTSIDE DIAMETER
OH	OVERHEAD
OPP	OPPOSITE
OPNG	OPENING
OSB	ORIENTED STRAND BOARD
PAF	POWDER ACTUATED FASTENERS
PC	PRECAST
PEMB	PRE-ENGINEERED METAL BUILDING
PERP	PERPENDICULAR
PSI	POUNDS PER SQUARE INCH
PSF	POUNDS PER SQUARE FOOT
REINF	REINFORCING
REQ'D	REQUIRED
SCHED	SCHEDULE
SECT	SECTION
SER	STRUCTURAL ENGINEER OF RECORD
SF	SQUARE FOOT
SL	SLOPED
SLBB	SHORT LEG BACK-TO-BACK
SPEC	SPECIFICATION
SQ	SQUARE
SS	STAINLESS STEEL
STD	STANDARD
SY	SQUARE YARD
SYM	SYMMETRICAL
T/ or TO	TOP OF
T&B	TOP AND BOTTOM
TEMP	TEMPORARY OR TEMPERATURE
T&G	TONGUE AND GROOVE
TYP	TYPICAL
UN	UNLESS NOTED
UNO	UNLESS NOTED OTHERWISE
VB	VAPOR BARRIER
VERT	VERICAL
W	WIDE FLANGE
W/	WITH
W/O	WITHOUT
WT	WEIGHT
WWF	WELDED WIRE FABRIC
YD	YARD

Jezerinac Geers
Structural Engineering

PROJECT NUMBER:	21.27.511
DESIGNED BY:	JEA
DRAWN BY:	CMS (R22)
CHECKED BY:	SNF
DOCUMENT STATUS:	☐ PROGRESS ■ PERMIT ■ BIDDING ☐ CONSTRUCTION

App Architecture
creative focused design
615 Woodside Drive, Englewood, Ohio 45322
T 937.836.8898 F 937.832.3696
www.app-arch.com

STATE OF OHIO
STANLEY N. FULLER
E-67148
REGISTERED PROFESSIONAL ENGINEER

MIAMI COUNTY ONE STOP CENTER
BOARD OF COMMISSIONERS FOR MIAMI COUNTY, OHIO
BARNHART ROAD, TROY, OHIO 45373

ISSUE		
NO.	DATE	DESCRIPTION
	04/08/2022	FOR CONSTRUCTION

DATE	04/08/2022
JOB NO.	3923.00
DRAWN	CMS
CHECKED	SNF

COPYRIGHT © 2022 - App Architecture, Inc.

TITLE
GENERAL STRUCTURAL INFORMATION

SHEET NO.
S0.1

4/8/2022 1:56:30 PM

LAP SPLICE SCHEDULE FOR CONCRETE REINFORCING

3,000 psi & 3,500 psi CONCRETE UNCOATED REINFORCING BARS				
BAR SIZE	3/4" CLR.		1 1/2" CLR. AND GREATER	
#4	3'-1"	2'-4"	3'-1"	2'-4"
#5	3'-10"	3'-0"	3'-10"	3'-0"
#6	4'-8"	3'-7"	4'-8"	3'-7"
#7	7'-6"	5'-9"	6'-9"	5'-2"
#8	9'-3"	7'-1"	7'-9"	5'-11"
#9	11'-2"	8'-7"	8'-8"	6'-8"
#10	13'-6"	10'-4"	9'-10"	7'-6"
#11	15'-10"	12'-2"	10'-11"	8'-4"

LAP SPLICE SCHEDULE FOR CONCRETE REINFORCING

4,000 psi & 4,500 psi CONCRETE UNCOATED REINFORCING BARS				
BAR SIZE	3/4" CLR.		1 1/2" CLR. AND GREATER	
#4	2'-8"	2'-1"	2'-8"	2'-1"
#5	3'-4"	2'-7"	3'-4"	2'-7"
#6	4'-0"	3'-1"	4'-0"	3'-1"
#7	6'-6"	5'-0"	5'-10"	4'-6"
#8	8'-0"	6'-2"	6'-8"	5'-2"
#9	9'-8"	7'-6"	7'-6"	5'-10"
#10	11'-8"	9'-0"	8'-6"	6'-6"
#11	13'-8"	10'-6"	9'-5"	7'-3"

1. TOP BARS / OTHER BARS — TOP BARS ARE DEFINED AS HORIZONTAL BARS WITH MORE THAN 12" OF CONCRETE CAST BELOW THE BAR.
2. BAR SPACING TO BE A MINIMUM OF THREE DIAMETERS UNLESS NOTED OR SCHEDULED OTHERWISE.
3. APPLICABLE ONLY FOR 60 KSI STEEL AND NORMAL WEIGHT CONCRETE.
4. IN LIEU OF LAP SPLICING, BARS MAY BE SPLICED BY MECHANICAL MEANS WHICH DEVELOP AT LEAST 125% OF THE BAR'S SPECIFIED YIELD STRENGTH.

REINFORCING COVER/TOLERANCE (#3 - #11 BARS)

EXPOSURE CONDITION	MIN. COVER (U.N.O.)	PLACEMENT TOLERANCE
CAST AGAINST AND PERMANENTLY EXPOSED TO EARTH:	3"	0", +3"
EXPOSED TO EARTH OR WEATHER - #5 AND SMALLER BARS: - #6 AND LARGER BARS:	1-1/2" 2"	-1/4", +1/2" -1/4", +1/2"
NEITHER EXPOSED TO WEATHER, NOR IN CONTACT WITH GROUND - SLABS AND WALLS: - BEAMS, COLUMNS, & PIERS: (TO TIES OR STIRRUPS)	3/4" 1-1/2"	-1/4", +3/8" -1/4", +1/2"

"-" INDICATES TOLERANCE TOWARDS MEMBER FACE.
"+" INDICATES TOLERANCE AWAY FROM MEMBER FACE.

LAP SPLICE SCHEDULE FOR MASONRY REINFORCING

f'm = 2,500 psi	BAR CENTERED IN WALL d = t/2			
	ld (in)			
BAR #	8" CMU	10" CMU	12" CMU	14" CMU
#3	1'-0"	1'-0"	1'-0"	1'-0"
#4	1'-0"	1'-0"	1'-0"	1'-0"
#5	1'-6"	1'-2"	1'-0"	1'-0"
#6	2'-10"	2'-2"	1'-9"	1'-6"
#7	3'-11"	3'-0"	2'-5"	2'-1"
#8	5'-11"	4'-7"	3'-9"	3'-2"
#9	-	5'-11"	4'-9"	4'-0"

1. * * * INDICATES LAP LENGTH GREATER THAN MAXIMUM ALLOWABLE HEIGHT OF 5'-0" FOR LOW-LIFT GROUTING.
2. APPLICABLE ONLY FOR BARS CENTERED IN MASONRY CELL.
3. APPLICABLE ONLY FOR 60 KSI STEEL AND ASTM C90 BLOCK.

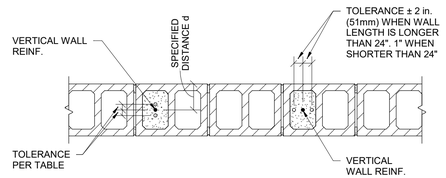

SPECIFIED DISTANCE d FROM FACE OF WALL TO CENTER OF REINFORCEMENT	ALLOWABLE TOLERANCE
d ≤ 8 in. (203 mm) 8 in. (203 mm) < d ≤ 24 in. (607 mm) d > 24 in. (607 mm)	± 1/2 in. (13 mm) ± 1 in. (25 mm) ± 1-1/4 in. (32 mm)

PROVIDE 1/2" MIN. CLEAR BETWEEN REINFORCING BARS AND THE INSIDE FACE OF THE MASONRY CELL.

CMU REINFORCING TOLERANCE LIMITATION

FOUNDATION NOTES

1. ▼ INDICATES FOOTING STEP PER SECTION 1/S2.1. STEP AT A RATIO NOT TO EXCEED ONE VERTICAL TO TWO HORIZONTAL.
2. ( ) INDICATES APPROXIMATE LOCATION AND INVERT ELEVATION OF UNDERGROUND UTILITIES. COORDINATE THE LOCATION AND DEPTH OF ALL UNDERGROUND MECHANICAL, ELECTRICAL, PLUMBING, AND/OR CIVIL WORK PRIOR TO CONSTRUCTION. NOT ALL UNDERGROUND UTILITIES ARE SHOWN ON THE STRUCTURAL DRAWINGS. FOUNDATIONS BUILT PRIOR TO THE INSTALLATION OF UNDERGROUND UTILITIES ARE TO BE STEPPED OR DROPPED COMPLETELY BELOW THE UTILITY DEPTH PER SECTION 1/S2.1 AND SLEEVED PER SECTION 2/S2.1. WHERE UNDERGROUND UTILITIES ARE IN PLACE PRIOR TO FOUNDATION CONSTRUCTION, THEY ARE TO BE ENCASED PER SECTION 3/S2.1. SEE SECTION 5/S2.1 FOR TRENCH EXCAVATION AND UTILITY PLACEMENT REQUIREMENTS FOR WORK THAT IS LAID ADJACENT TO FOOTINGS.
3. SW# FOR END ANCHORAGE REQUIREMENTS AND SECTION 4/S2.1 FOR ANCHOR BOLTS TO BE PLACED DURING FOUNDATION CONSTRUCTION. — INDICATES WOOD PANEL SHEARWALL. SEE SHEARWALL SCHEDULE ON SHEET S0.2
4. P(x) INDICATES CONCRETE PIER TYPE PER DETAILS ON SHEET S2.1.
5. DESIGN SOIL BEARING PRESSURE = 2,000 PSF BASED ON GEOTECHNICAL EXPLORATION REPORT BY BOWSER-MORNER, INC., DATED DECEMBER 17, 2021. REFERENCE THIS REPORT FOR ANY REQUIRED SOIL REMEDIATION PRIOR TO FOUNDATION AND/OR SLAB-ON-GRADE CONSTRUCTION. FOOTING EXCAVATIONS MAY BE REQUIRED TO EXTEND THROUGH EXISTING SOFT SOIL REGIONS IN ORDER TO BEAR ON SUITABLE MATERIAL. OVER-EXCAVATIONS ARE TO BE FILLED WITH LEAN CONCRETE, FLOWABLE FILL, OR COMPACTED ENGINEERED FILL UP THE PLANNED BOTTOM OF FOOTING ELEVATION. PLACE NO CONCRETE PRIOR TO INSPECTION AND APPROVAL OF BEARING SURFACES BY SOILS ENGINEER.
6. BOTTOM OF FOOTINGS ARE TO BE AT LEAST 32-INCHES BELOW THE ADJACENT EXTERIOR FINISHED GRADE FOR FROST PROTECTION.
7. KEEP FOUNDATIONS FREE OF WATER AT ALL TIMES. REPLACE WEAKENED SOIL WITH LEAN CONCRETE OR FLOWABLE FILL.
8. ELEVATIONS SHOWN ON FOOTINGS INDICATE ELEVATION AT TOP OF FOOTING. REFERENCE ELEVATION/TOP OF CONCRETE SLAB ELEVATION AS NOTED ON PLANS. COORDINATE ABSOLUTE ELEVATION OF TOP OF SLAB WITH SITE DRAWINGS.
9. PROVIDE CORNER BARS AT ALL FOOTING AND CONCRETE WALL INTERSECTIONS PER DETAIL 6/S2.1.
10. PROVIDE FOUNDATION DOWELS TO MATCH SIZE AND SPACING OF VERTICAL MASONRY WALL REINFORCING AS SHOWN ON THE WALL AND/OR FRAMING PLANS. WHERE VERTICAL REINFORCING IS INTERRUPTED BY OPENING IN WALL (DOOR, WINDOW, LOUVER, ETC.) PROVIDE ONE ADDITIONAL DOWEL AT EACH JAMB FOR EACH 6'-0" OF OPENING WIDTH. SEE SECTION 7/S2.1 FOR DOWEL PLACEMENT AND SCHEDULE ON SHEET S0.2 FOR LENGTH OF LAP SPLICES.
11. SEE ELEVATION A/S4.1 FOR TYPICAL REINFORCED MASONRY WALL CONSTRUCTION. SEE SECTION 11/S2.1 FOR TYPICAL CAST-IN ANCHOR BOLT CONSTRUCTION.
12. SEE SHEETS S0.1 AND S0.2 FOR GENERAL STRUCTURAL INFORMATION.

SLAB NOTES

1. SLAB CONSTRUCTION:

   4" CONCRETE SLAB ON GRADE W/ 6x6 W2.9/W2.9 W/W/F. OVER 15-MIL VAPOR BARRIER, OVER 4" COMPACTED #57 STONE SUBBASE. MESH IS TO BE SUPPORTED DURING CONCRETE PLACEMENT ON CHAIRS OR BOLSTERS AT MID-DEPTH OF SLAB. WIRE MESH ON THIS PROJECT IS AN INTEGRAL COMPONENT OF THE FOUNDATION DESIGN AND MAY NOT BE REPLACED WITH FIBER ADDITIVE. SUBGRADE UNDER SLAB IS TO BE MODIFIED WITH A RAMMED OR VIBRATED AGGREGATE PIER SYSTEM. SEE PLAN FOR FINISHED FLOOR ELEVATIONS. COORDINATE TOP OF SLAB ELEVATION WITH THICKNESS OF ARCHITECTURAL FINISHED FLOOR PRODUCTS.

   6" CONCRETE SLAB ON GRADE W/ #4 REINFORCING BARS AT 18" O.C. EACH WAY, OVER 15-MIL VAPOR BARRIER, OVER 6" COMPACTED STONE SUBBASE. BARS ARE TO BE SUPPORTED DURING CONCRETE PLACEMENT ON CHAIRS OR BOLSTERS AT MID-DEPTH OF SLAB. SEE PLAN FOR FINISHED FLOOR ELEVATIONS.
2. INDICATES SLAB CONTROL/CONSTRUCTION JOINT PER SECTION 8/S2.1. CONTROL JOINTS ARE TO BE LOCATED IN AREAS SHOWN AT A SPACING NOT TO EXCEED 12'-0" O.C. UNLESS DIMENSIONED OTHERWISE. DISTANCE BETWEEN SLAB CONSTRUCTION JOINTS IS NOT TO EXCEED 100 FEET IN ANY DIRECTION. PROVIDE CONTROL JOINTS AT COLUMNS PER DETAIL 9/S2.1. COORDINATE CONTROL JOINT LAYOUT WITH ARCHITECTURAL FLOOR FINISH PATTERNS.
3. REFER TO DIVISION 31 SPECIFICATIONS FOR DEPTH AND PLACEMENT OF DRAINAGE FILL AND DIVISION 3 FOR VAPOR BARRIER OR RETARDER BELOW SLABS ON GRADE.
4. SEE SECTIONS 1/S2.2 AND 2/S2.2 FOR TYPICAL INTERIOR TO EXTERIOR SLAB ON GRADE CONSTRUCTION AT DOOR OPENINGS. SEE SECTION 10/S2.1 FOR TYPICAL TRENCH DRAIN CONSTRUCTION.
5. SEE SHEETS S0.1 AND S0.2 FOR GENERAL STRUCTURAL INFORMATION.

MASONRY WALL NOTES

1. ML(d) INDICATES MASONRY BOND BEAM LINTEL PER SECTION 1/S4.1. USE STANDARD SCHEDULED BOND BEAM LINTELS FOR ALL EXPOSED NON-LOADBEARING ARCHITECTURAL OPENINGS IN MASONRY WALLS UNLESS NOTED OTHERWISE.
2. WL(d) INDICATES WIDE-FLANGE STEEL BEAM LINTEL PER SECTION 2/S4.1. PROVIDE BEARING PLATES AND ANCHOR BOLTS PER SECTION 9/S4.2.
3. VL(d) INDICATES VENEER LINTEL PER SECTION 3/S4.1. USE STANDARD SCHEDULED VENEER LINTELS FOR ALL OPENINGS IN BRICK OR MASONRY VENEERS UNLESS NOTED OTHERWISE.
4. SEE PLAN FOR VERTICAL MASONRY WALL REINFORCING. ALL REINFORCING IS TO RUN FULL HEIGHT OF WALL UNLESS NOTED OTHERWISE. WHERE SPACING OF VERTICAL REINFORCING IS INTERRUPTED BY OPENING IN WALL (DOOR, WINDOW, LOUVER, ETC.) PROVIDE ONE FULL-HEIGHT REINFORCING BAR AT EACH JAMB FOR EACH 6'-0" OF OPENING WIDTH. SEE SCHEDULE ON SHEET S0.2 FOR LENGTH OF LAP SPLICES.
5. NOT ALL LINTELS ARE SHOWN ON THESE PLANS. SEE ARCHITECTURAL DRAWINGS FOR LOCATION, WIDTH, HEIGHT, AND ELEVATION OF ALL EXPOSED OPENINGS. COORDINATE LOCATION, WIDTH, HEIGHT, AND ELEVATION OF ALL CONCEALED OPENINGS WITH APPROPRIATE TRADE CONTRACTOR.
6. LINTELS ARE NOT REQUIRED FOR OPENINGS IN CMU WALLS LESS THAN 16" WIDE AND IN BRICK VENEERS LESS THAN 8" WIDE. MASONRY CONTRACTOR IS TO COORDINATE ALL OPENING REQUIREMENTS WITH APPROPRIATE TRADE CONTRACTOR.
7. SEE ELEVATION A/S4.1 FOR TYPICAL REINFORCED MASONRY WALL CONSTRUCTION. PROVIDE CORNER BARS AT ALL MASONRY BOND BEAM INTERSECTIONS PER DETAIL 4/S4.1. INSTALL VENEER LEDGE ANGLES PER SECTION 5/S4.1.
8. PROVIDE CONTROL JOINTS IN ALL MASONRY WALLS AT A SPACING NOT TO EXCEED THREE TIMES THE WALL HEIGHT OR 24 FEET ON CENTER, WHICHEVER IS SMALLER. IN ADDITION, PROVIDE CONTROL JOINTS AT THE ENDS OF LINTELS, CHANGES IN WALL HEIGHT, CHANGES IN WALL THICKNESS, WITHIN 2 FEET OF WALL CORNERS AND INTERSECTIONS, TRANSITIONS FROM INTERIOR WALL TO EXTERIOR WALL, AND TRANSITIONS FROM WALL BEARING ON FOUNDATION TO WALL BEARING ON FLOOR SLAB.
9. SEE SHEETS S0.1 AND S0.2 FOR GENERAL STRUCTURAL INFORMATION.

STUD WALL NOTES

1. TYPICAL WALL SHEATHING:

   5/8" GYPSUM WALLBOARD. PROVIDE No. 6 x 1-1/4" TYPE S OR W SCREWS AT 7" O.C. AROUND ALL PANEL EDGES AND AT 7" O.C. FOR ALL INTERIOR SUPPORTS UNLESS NOTES OR SCHEDULED OTHERWISE. ALL PANEL EDGES ARE TO BE FULLY BLOCKED AT ALL SHEARWALL LOCATIONS.
2. H(x) INDICATES OPENING HEADER PER SECTION 1/S4.2. SEE ARCHITECTURAL DRAWINGS FOR LOCATION, EXTENT, AND ELEVATION OF ALL OPENINGS. SEE HEADER SCHEDULE FOR SIZES AND SUPPORT REQUIREMENTS. SEE SECTION 2/S4.2 FOR SILL CONSTRUCTION WHERE APPLICABLE.
3. ⊠ INDICATES BUILT-UP STUD COLUMN. PROVIDE A MINIMUM OF THREE FULL-HEIGHT STUDS AT ALL BEAMS, HEADERS, AND GIRDER TRUSSES UNLESS NOTED OR SCHEDULED OTHERWISE.
4. SW# INDICATES SHEARWALL. SEE SHEARWALL SCHEDULE FOR SHEAR PANEL ATTACHMENT, NAILING, BLOCKING, AND ANCHORAGE REQUIREMENTS.
5. WALL STUDS ARE TO EXTEND CONTINUOUS FOR FULL HEIGHT OF WALL, UNLESS NOTED OTHERWISE. WHERE STUDS ARE INTERRUPTED BY OPENING IN WALL (WINDOW, LOUVER, ETC.) PROVIDE ONE FULL-HEIGHT KING STUD AT EACH JAMB FOR EACH 2'-0" OF OPENING WIDTH.
6. PROVIDE STUD BRIDGING/BLOCKING AT 4'-0" O.C. FOR ALL METAL STUD WALLS. WHERE SHEATHING PANELS NEED NOT BE BLOCKED, PROPRIETARY BRIDGING SYSTEMS MAY BE USED IF APPROVED BY THE ARCHITECT PRIOR TO CONSTRUCTION.
7. LAP STUD WALL TOP PLATE PER SECTION 3/S4.2.
8. ALL WALL DIMENSIONS SHOWN ARE TO FACE OF STUD.
9. SEE SHEETS S0.1 AND S0.2 FOR GENERAL STRUCTURAL INFORMATION.

ROOF FRAMING NOTES

1. DESIGN LIVE/SNOW LOADS:

   ROOF LIVE 20 PSF
   ROOF SNOW 20 PSF
2. ROOF CONSTRUCTION:

   5/8" NOMINAL APA RATED SHEATHING, EXPOSURE 1, WITH A 40/20 MINIMUM SPAN RATING. PROVIDE 10d COMMON NAILS AT 6" O.C. AT ALL PANEL EDGES AND 12" O.C. AT ALL INTERMEDIATE SUPPORTS UNLESS NOTED OTHERWISE. PANEL EDGES NEED NOT BE BLOCKED UNLESS NOTED OR DETAILED OTHERWISE.
3. INDICATES ROOF OPENING. DETERMINE EXACT SIZE AND LOCATION FROM ARCHITECTURAL AND MECHANICAL DRAWINGS. NOT ALL OPENINGS ARE SHOWN ON THE STRUCTURAL DRAWINGS. SEE SECTION 4/S4.2 FOR FRAMING OF ALL OPENINGS EQUAL TO OR GREATER THAN 12" SQUARE OR DIAMETER. SIZE OF OPENING IS NOT TO EXCEED THE TYPICAL CLEAR DISTANCE BETWEEN FRAMING MEMBERS OR TRUSSES. NOTIFY THE ARCHITECT BEFORE PROCEEDING IF OPENINGS CANNOT BE FIT BETWEEN FRAMING MEMBERS.
4. INDICATES SNOW DRIFT LOAD ON ROOF. WOOD TRUSSES AND I-JOISTS ARE TO BE DESIGNED TO ACCOMMODATE ADDITIONAL LOADING.
5. INDICATES INFILL FRAMING LOCATION. VALLEY SET TRUSSES MAY BE SUBSTITUTED AT CONTRACTOR'S OPTION. INFILL FRAMING IS TO UNIFORMLY DISTRIBUTE LOADING TO UNDERLYING ROOF WITH A MAXIMUM SUPPORT SPACING OF 2'-0". DO NOT STICK-BUILD WITH RIDGE BEAM AND RAFTERS.
6. WT# INDICATES MECHANICAL LOAD SUPPORTED ON ROOF. COORDINATE FINAL SIZE, WEIGHT, LOCATION, AND OPENING REQUIREMENTS WITH MECHANICAL CONTRACTOR. I-JOISTS ARE TO BE DESIGNED TO ACCOMMODATE ADDITIONAL LOADING.
7. TOP OF STRUCTURAL STEEL OR TRUSS BEARING ELEVATION NOTED ON PLAN. REFERENCE ELEVATION 100'-0" = TOP OF FIRST FLOOR SLAB ON GRADE.
8. ALL WOOD ROOF FRAMING, INCLUDING BEAMS, RAFTERS, ENGINEERED WOOD TRUSSES, AND PLYWOOD/OSB SHEATHING IS TO FIRE-RETARDANT TREATED.
9. SEE ARCHITECTURAL DRAWINGS FOR ANY DIMENSIONS NOT INDICATED HEREIN.
10. SEE SHEETS S0.1 AND S0.2 FOR GENERAL STRUCTURAL INFORMATION.

CONT. WALL FOOTING SCHEDULE

MARK	SIZE	REINFORCING
F24	2'-0" x 1'-0" DP.	(2) #5 CONT. BOT.
TS24	2'-0" x 1'-6" DP.	(2) #5 CONT. TOP & BOT.

SPREAD FOOTING SCHEDULE

MARK	SIZE	REINFORCING
F4.0	4'-0" x 4'-0" x 1'-0" DP.	(4) #5 EA. WAY BOT.
F5.0	5'-0" x 5'-0" x 1'-0" DP.	(5) #5 EA. WAY BOT.
TS2.0	2'-0" x 2'-0" x 1'-0" DP.	(2) #5 EA. WAY BOT.

WALL SCHEDULE

MARK	STUD SIZE AND SPACING	COMMENTS
W1	600S162-54 @ 16" O.C.	-

WALL SCHEDULE NOTES:

1. BEARING WALL STUDS ARE TO ALIGN DIRECTLY BELOW THE JOIST OR TRUSS THAT THE WALL IS SUPPORTING.
2. REVIEW ALL FRAMING DETAILS FOR TYPICAL ARRANGEMENT OF STUDS, BEARING CONDITIONS, BRIDGING, AND BLOCKING REQUIREMENTS.
3. ALL MULTIPLE MEMBERS SHALL BE INTERCONNECTED TOGETHER WITH #10 SCREWS AT 12" ON CENTER OR 1" WELDS AT 18" ON CENTER.
4. ALL ENDS OF AXIAL LOAD BEARING WALL STUDS SHALL HAVE SQUARE END CUTS AND SHALL BE SEATED TIGHT AGAINST TRACK WITH A MAXIMUM GAP TOLERANCE OF 1/8" BETWEEN THE END OF THE STUD AND THE WEB OF THE TRACK.
5. ALL STUDS SHALL OF ONE CONTINUOUS MEMBER AND SHALL NOT BE SPLICED WITHOUT AN APPROVED DESIGN.

HEADER SCHEDULE

MARK	MAIN MEMBERS	TRACK TOP & BOT.	SILL TRACK	JAMB STUDS EA. END	CONNECTION SCREWS EA. END	COMMENTS
H1	600S162-54	600T125-43	600T125-43	1	(6) #12	-
H2	800S162-54	600T125-43	600T125-43	2	(8) #12	-
H3	1000S162-54	600T200-54	600T200-54	2	(10) #12	-
H4	1200S162-54	600T200-54	600T200-54	3	(12) #12	-
H5	1200S200-68	600T200-54	600T200-54	2	(12) #12	JAMB STUDS TO BE 600S200-68

HEADER SCHEDULE NOTES:

1. ALL HEADER MEMBERS AND JAMB STUDS SHALL BE OF ONE CONTINUOUS PIECE. SPLICING OF MEMBERS IS NOT PERMITTED.
2. PUNCHED WEB OPENINGS ARE NOT PERMITTED IN HEADER MEMBER FRAMING.
3. SEE FRAMING SECTIONS FOR TYPICAL HEADER, SILL, AND JAMB FRAMING CONSTRUCTION.
4. PROVIDE 'H1' HEADERS FOR ALL OPENINGS NOT DESIGNATED ON THE FRAMING PLANS.

SHEARWALL SCHEDULE

MARK	SHEATHING PANEL	PANEL APPLICATION	SHEATHING PANEL FASTENING			SOLE PLATE ANCHORAGE	END STUDS	END ANCHORAGE	COMMENTS
			FASTENER	PANEL EDGES	PANEL FIELD				
SW1	1/2" GYP WALLBOARD	ONE SIDE	#6	7	7	1/2" DIA. EXP. ANCHOR @ 32" O.C.	2	-	-
SW2	1/2" GYP WALLBOARD	BOTH SIDES	#6	7	7	1/2" DIA. EXP. ANCHOR @ 24" O.C.	2	-	-
SW3	1/2" GYP WALLBOARD	ONE SIDE	#6	7	7	1/2" DIA. EXP. ANCHOR @ 32" O.C.	2	S/HDU4 W/ 5/8" ANCHOR ROD	-
SW4	1/2" GYP WALLBOARD	BOTH SIDES	#6	7	7	1/2" DIA. EXP. ANCHOR @ 24" O.C.	2	S/HDU4 W/ 5/8" ANCHOR ROD	-
SW5	1/2" GYP WALLBOARD	BOTH SIDES	#6	4	4	1/2" DIA. EXP. ANCHOR @ 16" O.C.	2	S/HDU6 W/ 5/8" ANCHOR ROD	-

SHEARWALL SCHEDULE NOTES:

1. ALL PANEL EDGES SHALL BE LOCATED ON STUDS, BLOCKING, BLOCKING LAID FLATWAYS AGAINST SHEATHING, PLATES, OR RIM BOARD.
2. FASTENER SUBSTITUTIONS ARE NOT PERMITTED, UNLESS APPROVED ENGINEER REVIEW IS COMPLETED AT CONTRACTOR'S EXPENSE.
3. COORDINATE SOLE PLATE ANCHORAGES WITH TYPICAL CONSTRUCTION DETAILS INDICATED THROUGHOUT STRUCTURAL DRAWINGS.
4. SEE STRUCTURAL DETAILS FOR TOP AND BOTTOM PLATE SPLICING DETAIL.

App Architecture
creative focused design
615 Woodside Drive, Englewood, Ohio 45322
T 937.836.8898 F 937.832.3696
www.app-arch.com

STATE OF OHIO — STANLEY N. FULLER — E-67148 — REGISTERED PROFESSIONAL ENGINEER

MIAMI COUNTY ONE STOP CENTER
BOARD OF COMMISSIONERS FOR MIAMI COUNTY, OHIO
BARNHART ROAD, TROY, OHIO 45373

ISSUE

NO.	DATE	DESCRIPTION
	04/08/2022	FOR CONSTRUCTION

DATE	04/08/2022
JOB NO.	3923.00
DRAWN	CMS
CHECKED	SNF

COPYRIGHT © 2022 - App Architecture, Inc.

TITLE
STRUCTURAL NOTES & SCHEDULES

SHEET NO.
S0.2

4/8/2022 1:56:31 PM

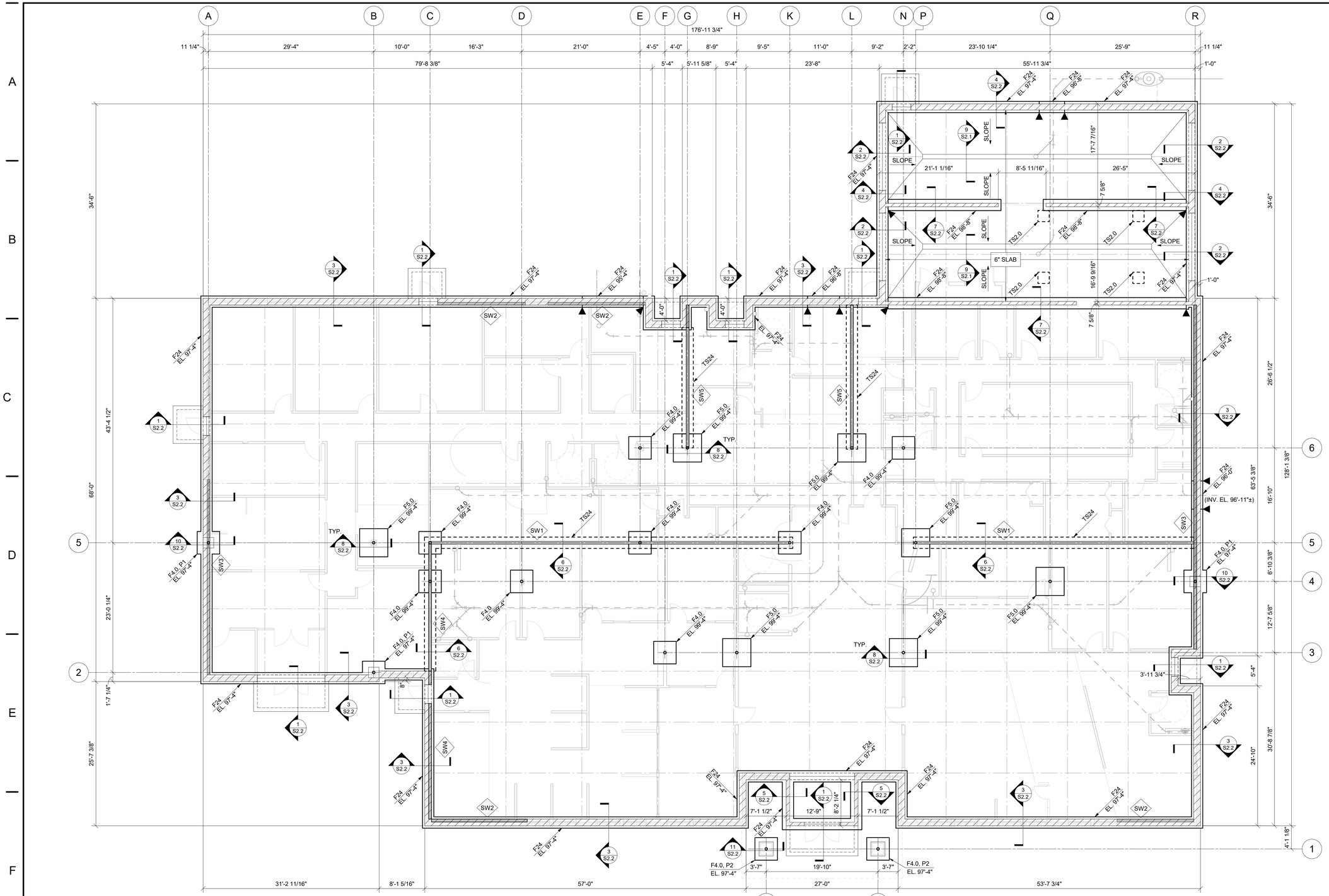

FOUNDATION PLAN

1/8" = 1'-0"

App Architecture
creative focused design
615 Woodside Drive, Englewood, Ohio 45322
T 937.836.8898 F 937.832.3696
www.app-arch.com

STATE OF OHIO
STANLEY N. FULLER
PROFESSIONAL ENGINEER

MIAMI COUNTY ONE STOP CENTER
BOARD OF COMMISSIONERS FOR MIAMI COUNTY, OHIO
BARNHART ROAD, TROY, OHIO 45373

ISSUE

NO.	DATE	DESCRIPTION
	04/08/2022	FOR CONSTRUCTION

DATE	04/08/2022
JOB NO.	3923.00
DRAWN	CMS
CHECKED	SNF

COPYRIGHT © 2022 - App Architecture, Inc.

TITLE
FOUNDATION PLAN

SHEET NO.
S1.1

4/8/2022 1:56:33 PM

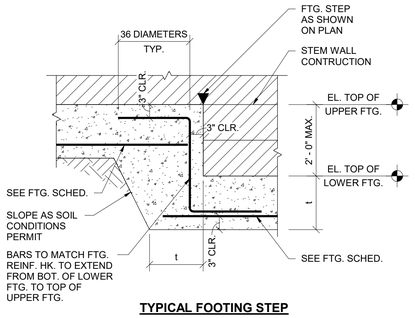

TYPICAL FOOTING STEP

SECTION 1
3/4" = 1'-0"

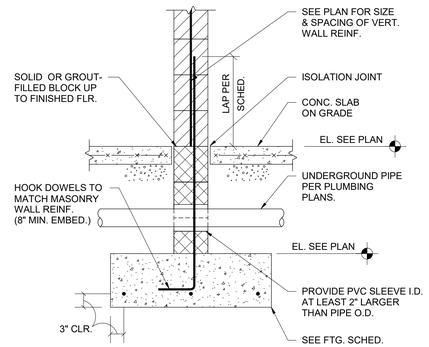

SECTION 2
3/4" = 1'-0"

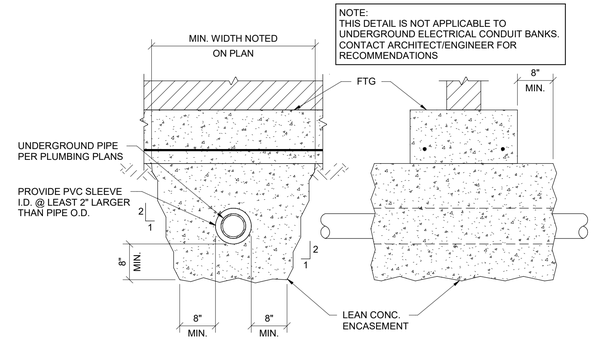

TYPICAL PLUMBING UNDER FOOTING

SECTION 3
3/4" = 1'-0"

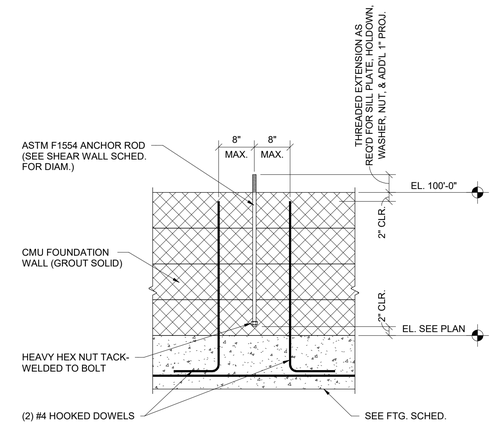

SECTION 4
3/4" = 1'-0"

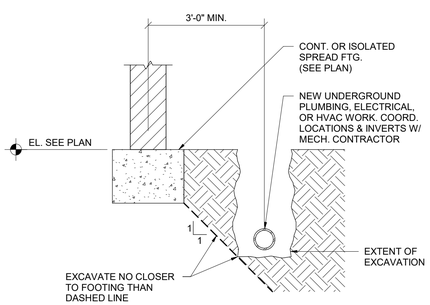

TYPICAL EXCAVATION CLEARANCE REQUIREMENTS AT NEW UNDERGROUND WORK

SECTION 5
3/4" = 1'-0"

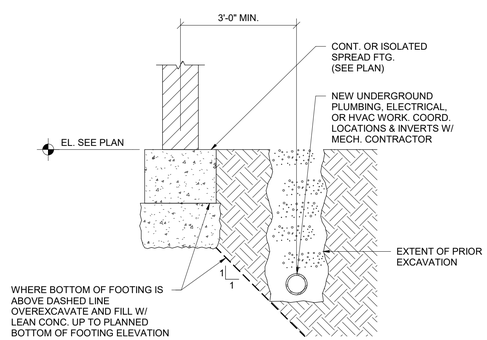

TYPICAL OVEREXCAVATION REQUIREMENTS AT IN-PLACE UNDERGROUND WORK

SECTION 6
3/4" = 1'-0"

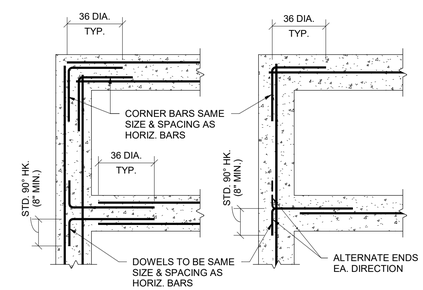

TYPICAL CORNER BARS FOR CONCRETE WALL AND FOOTING CONSTRUCTION

SECTION 7
3/4" = 1'-0"

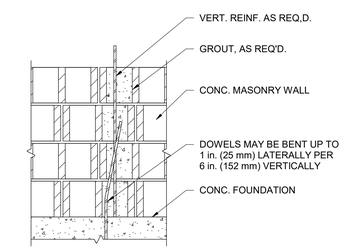

CMU REINFORCING DOWEL PLACEMENT

SECTION 8
1 1/2" = 1'-0"

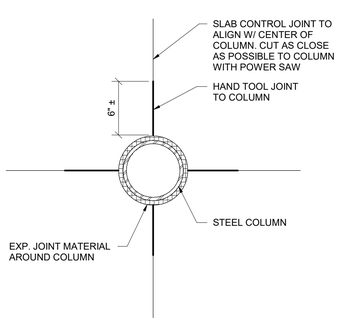

SECTION 9
3/4" = 1'-0"

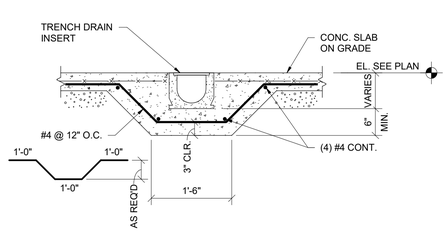

SECTION 10
3/4" = 1'-0"

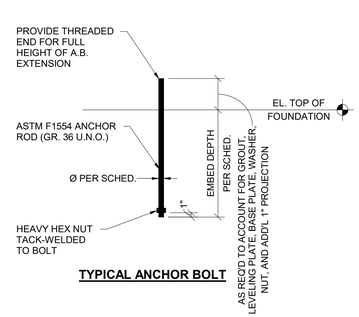

TYPICAL ANCHOR BOLT

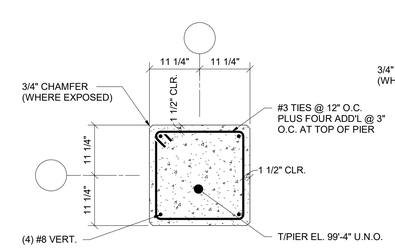

PIER P1

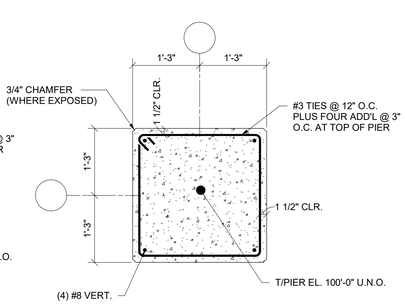

PIER P2

App Architecture
creative focused design
615 Woodside Drive, Englewood, Ohio 45322
T 937.836.8898 F 937.832.3696
www.app-arch.com

STATE OF OHIO
STANLEY N. FULLER
PROFESSIONAL ENGINEER

MIAMI COUNTY ONE STOP CENTER
BOARD OF COMMISSIONERS FOR MIAMI COUNTY, OHIO
BARNHART ROAD, TROY, OHIO 45373

ISSUE

NO.	DATE	DESCRIPTION
	04/08/2022	FOR CONSTRUCTION

DATE	04/08/2022
JOB NO.	3923.00
DRAWN	CMS
CHECKED	SNF

COPYRIGHT © 2022 - App Architecture, Inc.

TITLE
FOUNDATION DETAILS

SHEET NO.
S2.1

4/8/2022 1:56:33 PM

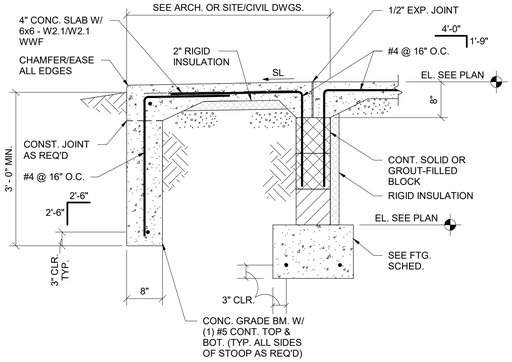

TYPICAL INTERIOR-TO-EXTERIOR SLAB TRANSITION

SECTION 1
3/4" = 1'-0"

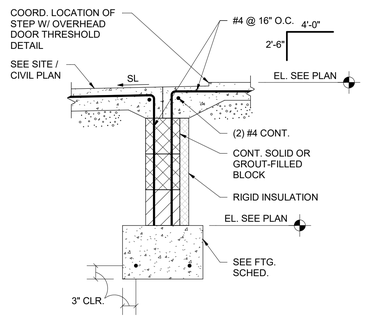

TYPICAL INTERIOR-TO-EXTERIOR SLAB AT OVERHEAD DOORS

SECTION 2
3/4" = 1'-0"

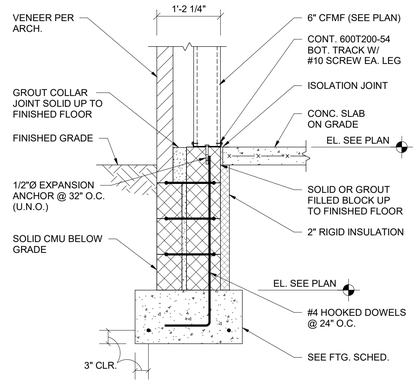

SECTION 3
3/4" = 1'-0"

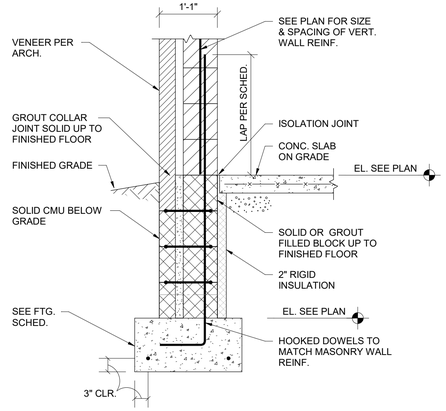

SECTION 4
3/4" = 1'-0"

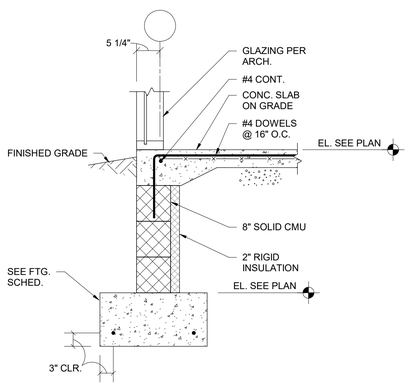

SECTION 5
3/4" = 1'-0"

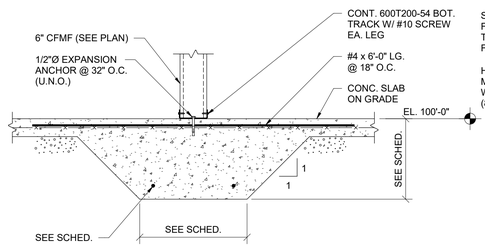

SECTION 6
3/4" = 1'-0"

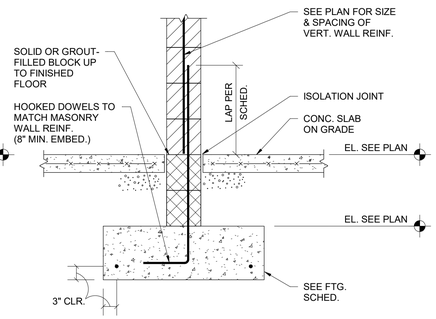

SECTION 7
3/4" = 1'-0"

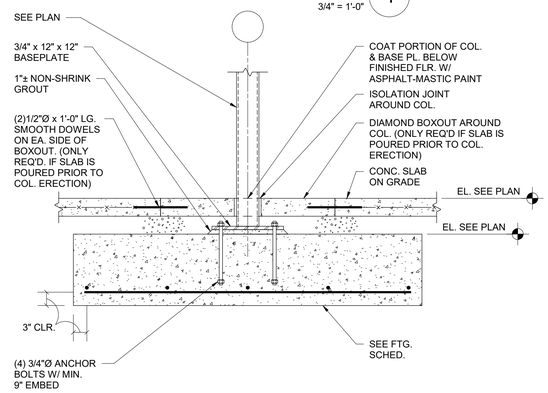

SECTION 8
3/4" = 1'-0"

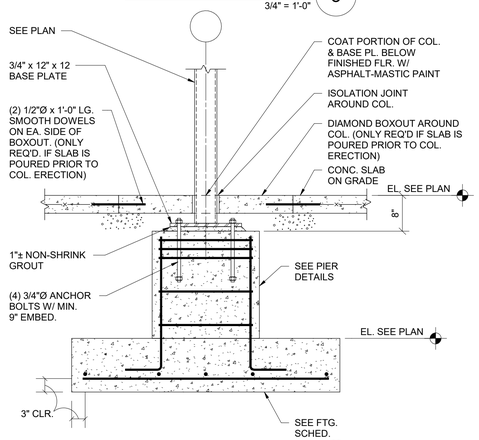

SECTION 9
3/4" = 1'-0"

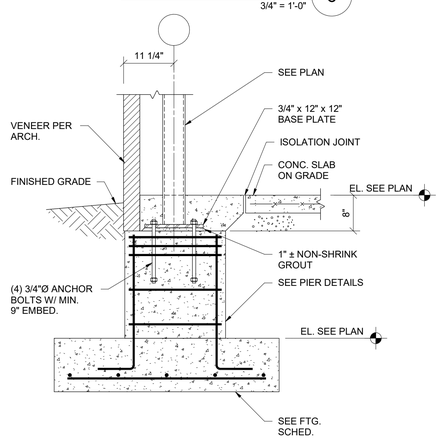

SECTION 10
3/4" = 1'-0"

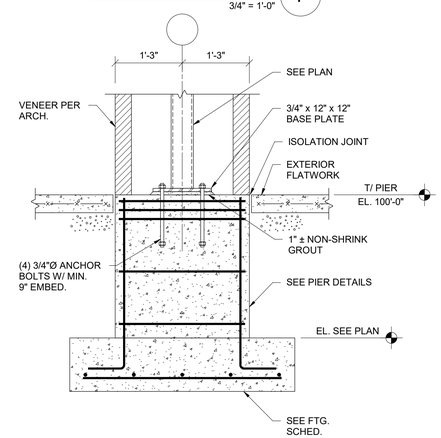

SECTION 11
3/4" = 1'-0"

App Architecture
creative focused design
615 Woodside Drive, Englewood, Ohio 45322
T 937.836.8898 F 937.832.3696
www.app-arch.com

STATE OF OHIO
STANLEY N. FULLER
E-67146
REGISTERED
PROFESSIONAL ENGINEER

MIAMI COUNTY ONE STOP CENTER
BOARD OF COMMISSIONERS FOR MIAMI COUNTY, OHIO
BARNHART ROAD, TROY, OHIO 45373

ISSUE

NO.	DATE	DESCRIPTION
	04/08/2022	FOR CONSTRUCTION

DATE	04/08/2022
JOB NO.	3923.00
DRAWN	CMS
CHECKED	SNF

COPYRIGHT © 2022 - App Architecture, Inc.

TITLE
FOUNDATION DETAILS

SHEET NO.
S2.2

4/8/2022 1:56:33 PM

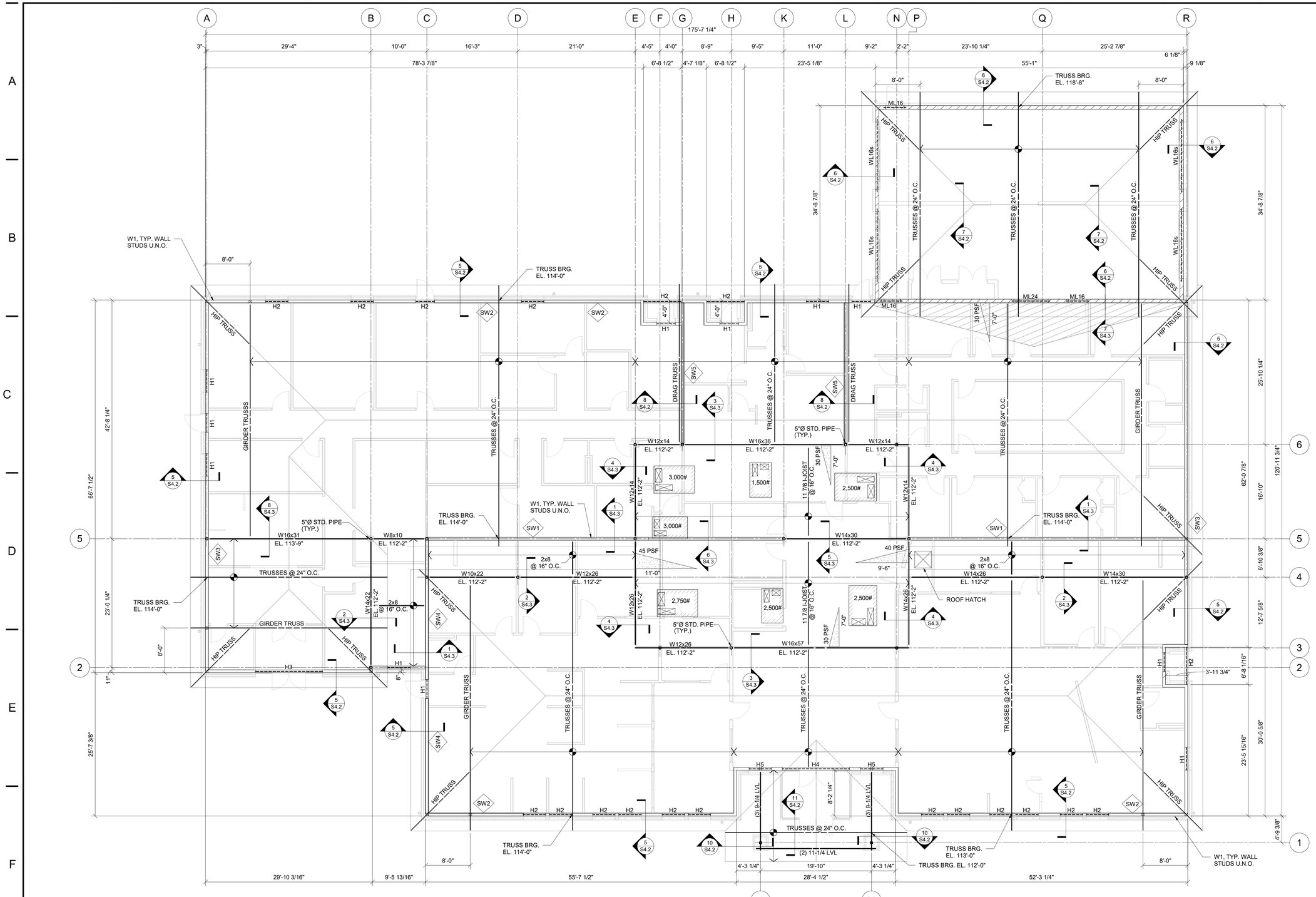

ROOF FRAMING PLAN

1/8" = 1'-0"

App Architecture
creative focused design
615 Woodside Drive, Englewood, Ohio 45322
T 937.836.8898 F 937.832.3696
www.app-arch.com

STATE OF OHIO
STANLEY N. FULLER
PE-67146
REGISTERED PROFESSIONAL ENGINEER

MIAMI COUNTY ONE STOP CENTER
BOARD OF COMMISSIONERS FOR MIAMI COUNTY, OHIO
BARNHART ROAD, TROY, OHIO 45373

ISSUE

NO.	DATE	DESCRIPTION
	04/08/2022	FOR CONSTRUCTION

DATE	04/08/2022
JOB NO.	3923.00
DRAWN	CMS
CHECKED	SNF

COPYRIGHT © 2022 - App Architecture, Inc.

TITLE
ROOF FRAMING PLAN

SHEET NO.
S3.1

4/8/2022 1:56:34 PM

MASONRY LINTELS

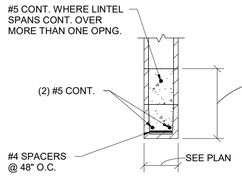

MARK	DEPTH (d)	MAX. SPAN (UNO)
ML8	7 5/8"	6'-0"
ML16	1'-3 5/8"	8'-4"
ML24	1'-11 5/8"	10'-8"

ML(d)

MASONRY LINTEL NOTES

1. FILL IS 2500 PSI (MINIMUM) GROUT. USE FINE GROUT FOR WALLS 6 INCHES AND LESS.
2. FOR TYPE OF CMU AND TYPE OF BOND, SEE SPECIFICATION SECTION 042000.
3. LINTELS SHALL BEAR ON SOLID CMU OR ON 2 FILLED COURSES.
4. MAXIMUM SPANS DO NOT APPLY TO LOAD BEARING WALLS.
5. BOND PATTERN OF LINTEL TO MATCH THAT OF SURROUNDING WALL.
6. BOTTOM OF LINTEL SHALL BE SMOOTH MASONRY WITH NO CORES EXPOSED.
7. 14" LINTELS MAY BE MADE-UP OF TWO PIECES IF 14" BOND BEAM UNITS ARE NOT AVAILABLE.
8. PROVIDE 8" MINIMUM BEARING EACH END FOR 8" AND 16" DEEP LINTELS. USE 16" MINIMUM BEARING FOR 24" (AND DEEPER) LINTELS.
9. PROVIDE SCORED BLOCK AS REQUIRED TO MATCH ADJACENT WALL FINISH. REFER TO INTERIOR FINISH SCHEDULE FOR LOCATION OF ALL SCORED BLOCK.
10. PROVIDE TWO LAYERS OF 15-MIL PLASTIC VAPOR BARRIER BELOW ALL LINTEL BEARINGS AND CAULK FACE JOINT.

SECTION 1
3/4" = 1'-0"

STEEL BEAM LINTELS

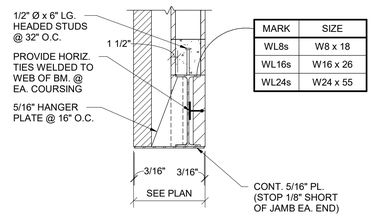

MARK	SIZE
WL8s	W8 x 18
WL16s	W16 x 26
WL24s	W24 x 55

WL(d)s

STEEL BEAM LINTEL NOTES

1. LINTELS SHALL BEAR ON SOLID MASONRY OR ON TWO CMU COURSES FULLY GROUTED.
2. FURNISH AND INSTALL ALL LOOSE LINTELS REQUIRED FOR ALL OPENINGS IN MASONRY, INCLUDING MECHANICAL AND ELECTRICAL WORK, WHETHER SPECIFICALLY NOTED ON DRAWINGS OR NOT.
3. ALL LINTELS AT EXTERIOR LOCATIONS OR OTHERWISE SUBJECT TO WEATHER OR CORROSIVE ATMOSPHERE SHALL BE GALVANIZED.
4. PROVIDE 8" MINIMUM BEARING EACH END FOR 8" AND 16" DEEP SPAN LINTELS. USE 12" MINIMUM BEARING EACH END FOR 24" (AND DEEPER) SPAN LINTELS.
5. PROVIDE TWO LAYERS OF 15-MIL PLASTIC VAPOR BARRIER BELOW ALL LINTEL BEARINGS AND CAULK FACE JOINT.

SECTION 2
3/4" = 1'-0"

VENEER LINTELS

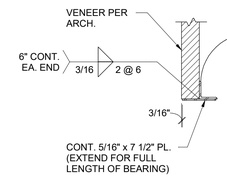

MARK	SIZE	MAX. SPAN (UNO)
VL4	L4 x 3 1/2 x 5/16	6'-0"
VL6	L6 x 3 1/2 x 5/16 LLV	8'-4"

VL(d)

VENEER LINTEL NOTES

1. FURNISH AND INSTALL ALL LOOSE LINTELS REQUIRED FOR ALL OPENINGS IN MASONRY, INCLUDING MECHANICAL AND ELECTRICAL WORK, WHETHER SPECIFICALLY NOTED ON DRAWINGS OR NOT.
2. ALL LINTELS AT EXTERIOR LOCATIONS OR OTHERWISE SUBJECT TO WEATHER OR CORROSIVE ATMOSPHERE SHALL BE GALVANIZED.
3. PROVIDE 6" MINIMUM BEARING EACH END.
4. PROVIDE TWO LAYERS OF 15-MIL PLASTIC VAPOR BARRIER BELOW ALL LINTEL BEARINGS AND CAULK FACE JOINT.

SECTION 3
3/4" = 1'-0"

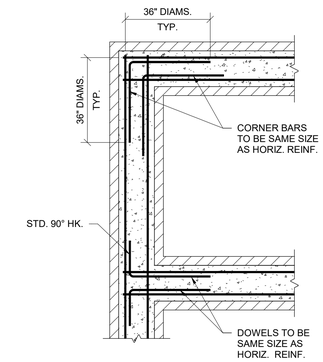

TYPICAL CORNER BARS FOR MASONRY BOND BEAMS

SECTION 4
3/4" = 1'-0"

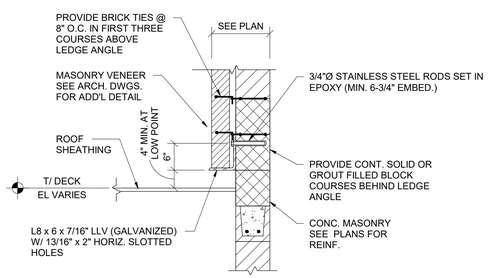

ROOF PITCH	ANGLE LENGTH	STEP HEIGHT	ANCHORS FOR SUPPORTED VENEER HEIGHT UP TO 14'-0"	ANCHORS FOR SUPPORTED VENEER HEIGHT UP TO 21'-0"
< 2:12	AS REQ'D	0" TO 8"	3/4"Ø @ 24" O.C. MAX.	3/4"Ø @ 16" O.C. MAX.

TYPICAL BRICK SUPPORT ANGLE ABOVE LOW-SLOPED ROOFS

BRICK LEDGE ANGLE NOTES

1. SEE SCHEDULE FOR MAXIMUM SUPPORTED BRICK HEIGHTS. PROVIDE ADDITIONAL RELIEF ANGLES FOR HEIGHTS WHICH EXCEED THE MAXIMUM.
2. EPOXY (CHEMICAL ADHESIVE) SHALL HAVE THE FOLLOWING PUBLISHED MINIMUM ALLOWABLE LOAD CAPACITY:
   TENSION = 3000 LBS
   SHEAR = 3500 LBS
3. INSTALL ALL ANCHORS IN STRICT ACCORDANCE WITH THE MANUFACTURER'S PUBLISHED RECOMMENDATIONS, INCLUDING THE FOLLOWING:
   a. USE PROPER SIZE CARBIDE DRILL BIT. DO NOT USE DIAMOND CORE BITS UNLESS SPECIFICALLY APPROVED BY EPOXY SUPPLIER.
   b. CLEAN HOLE WITH WIRE BRUSH AND BLOW OUT WITH COMPRESSED AIR.
   c. INSERT ADHESIVE AND TWIST ROD INTO PLACE. FASTENER MAY BE ADJUSTED DURING GEL TIME. DO NOT DISTURB BETWEEN TIME OF GEL AND FINAL TIME TO CURE.
   d. APPLY TORQUE AS REQUIRED BY MANUFACTURER.

SECTION 5
3/4" = 1'-0"

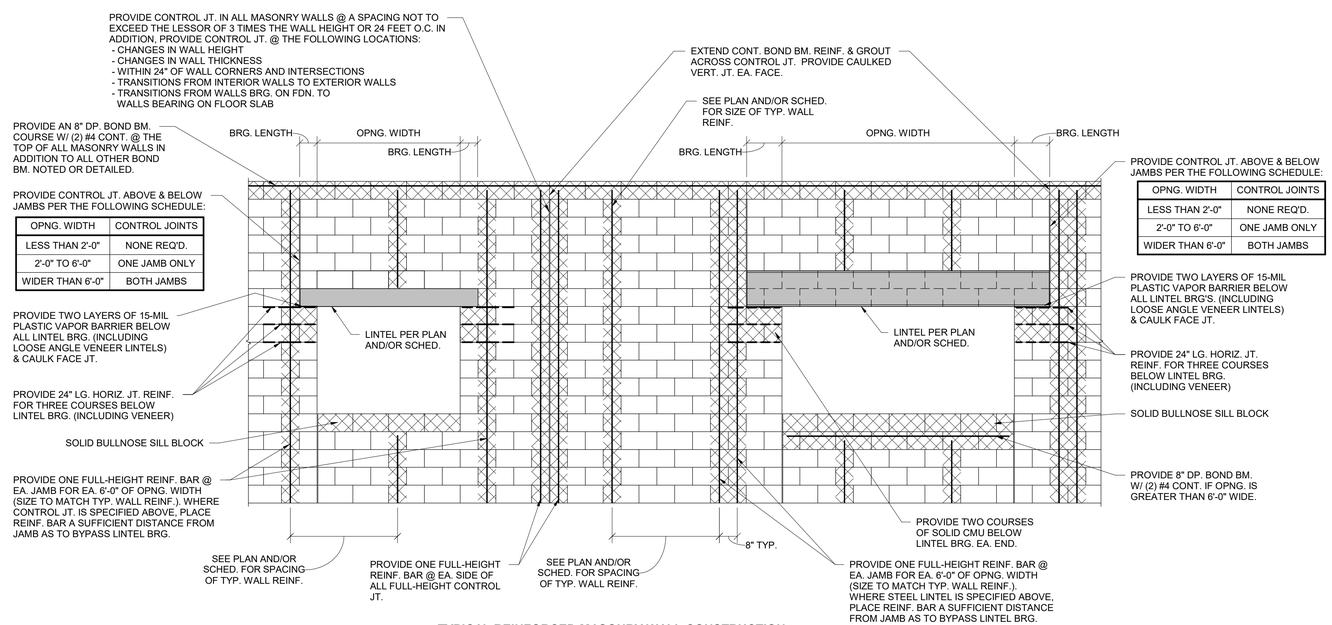

OPNG. WIDTH	CONTROL JOINTS
LESS THAN 2'-0"	NONE REQ'D.
2'-0" TO 6'-0"	ONE JAMB ONLY
WIDER THAN 6'-0"	BOTH JAMBS

OPNG. WIDTH	CONTROL JOINTS
LESS THAN 2'-0"	NONE REQ'D.
2'-0" TO 6'-0"	ONE JAMB ONLY
WIDER THAN 6'-0"	BOTH JAMBS

TYPICAL REINFORCED MASONRY WALL CONSTRUCTION

ELEVATION A
3/8" = 1'-0"

App Architecture
creative focused design
615 Woodside Drive, Englewood, Ohio 45322
T 937.836.8898 F 937.832.3696
www.app-arch.com

STATE OF OHIO
STANLEY N. FULLER
PE-67148
REGISTERED
PROFESSIONAL ENGINEER

MIAMI COUNTY ONE STOP CENTER
BOARD OF COMMISSIONERS FOR MIAMI COUNTY, OHIO
BARNHART ROAD, TROY, OHIO 45373

ISSUE

NO.	DATE	DESCRIPTION
	04/08/2022	FOR CONSTRUCTION

DATE	04/08/2022
JOB NO.	3923.00
DRAWN	CMS
CHECKED	SNF

COPYRIGHT © 2022 - App Architecture, Inc.

TITLE
FRAMING DETAILS

SHEET NO.
S4.1

4/8/2022 1:56:35 PM

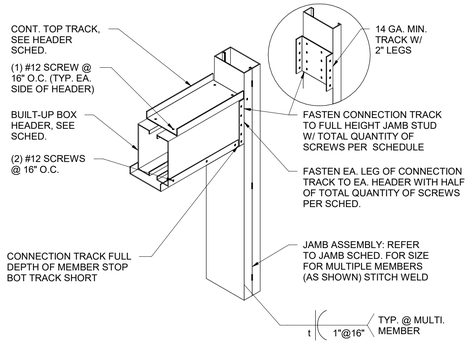

TYPICAL BOX HEADER CONNECTION

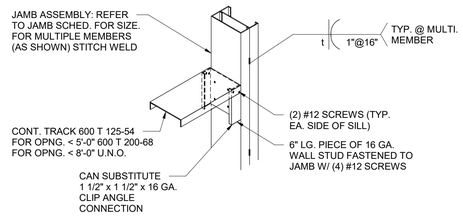

TYPICAL SILL CONNECTION

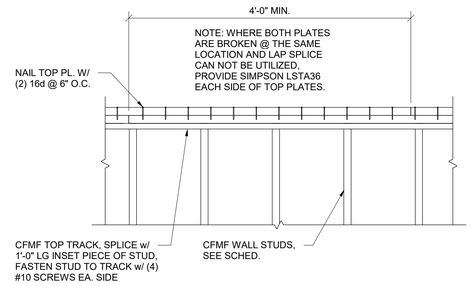

TYPICAL-TOP PLATE SPLICE

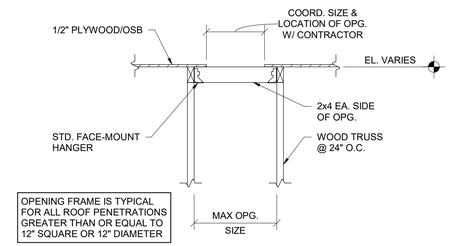

TYPICAL ROOF OPENING BETWEEN WOOD TRUSSES

SECTION 1 — 1" = 1'-0"

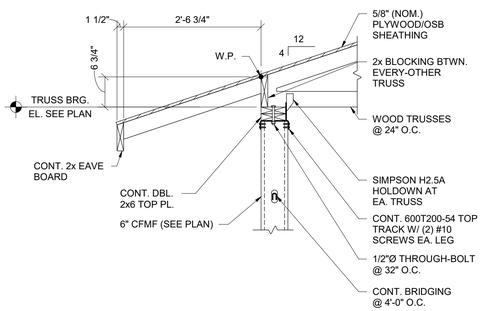

SECTION 5 — 3/4" = 1'-0"

SECTION 2 — 1" = 1'-0"

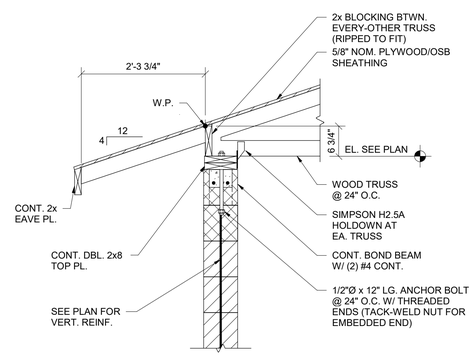

SECTION 6 — 3/4" = 1'-0"

SECTION 3 — 3/4" = 1'-0"

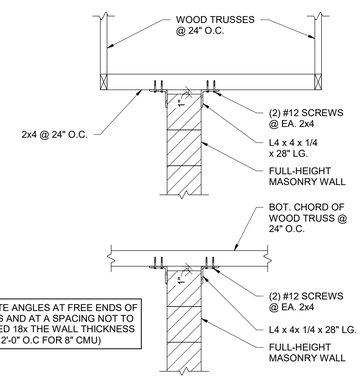

FULL HEIGHT-UNDER WOOD TRUSSES

SECTION 4 — 3/4" = 1'-0"

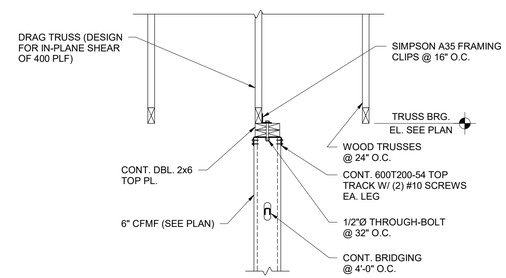

SECTION 8 — 3/4" = 1'-0"

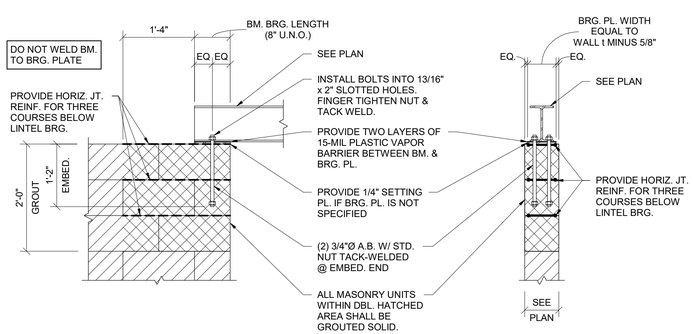

TYPICAL BEAM BEARING PARALLEL TO MASONRY WALL OR AT CORNER OF MASONRY WALL

SECTION 9 — 3/4" = 1'-0"

SECTION 7 — 3/4" = 1'-0"

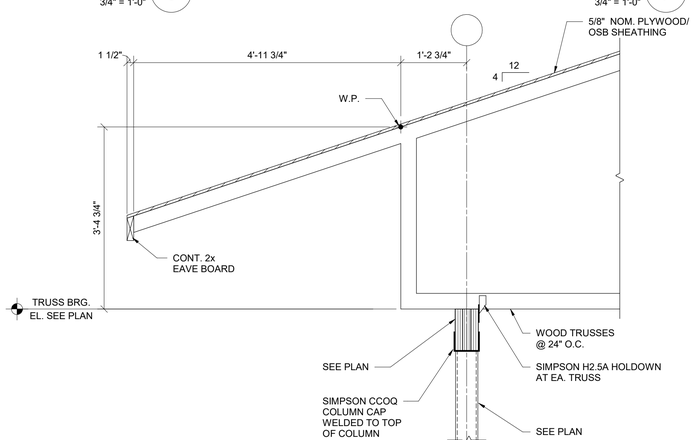

SECTION 10 — 3/4" = 1'-0"

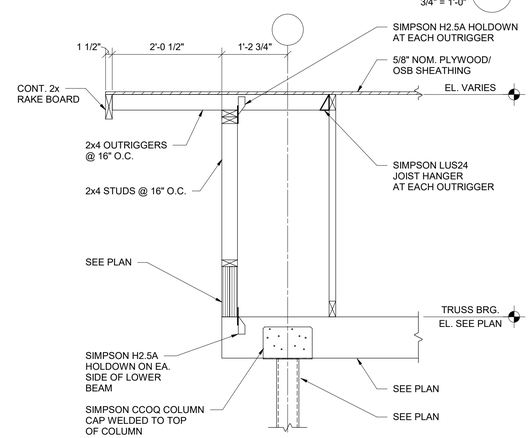

SECTION 11 — 3/4" = 1'-0"

App Architecture
creative focused design
615 Woodside Drive, Englewood, Ohio 45322
T 937.836.8898 F 937.832.3696
www.app-arch.com

STATE OF OHIO
STANLEY N. FULLER
PROFESSIONAL ENGINEER

MIAMI COUNTY ONE STOP CENTER
BOARD OF COMMISSIONERS FOR MIAMI COUNTY, OHIO
BARNHART ROAD, TROY, OHIO 45373

ISSUE

NO.	DATE	DESCRIPTION
	04/08/2022	FOR CONSTRUCTION

DATE	04/08/2022
JOB NO.	3923.00
DRAWN	CMS
CHECKED	SNF

COPYRIGHT © 2022 - App Architecture, Inc.

TITLE
FRAMING DETAILS

SHEET NO.
S4.2

4/8/2022 1:56:35 PM

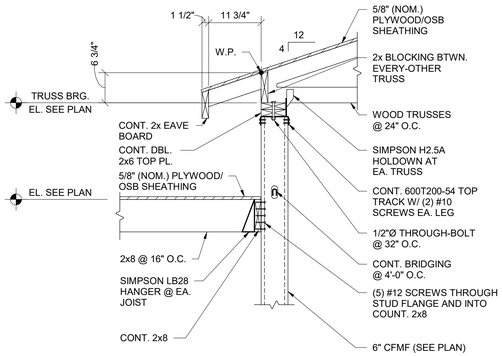

SECTION 1
3/4" = 1'-0"

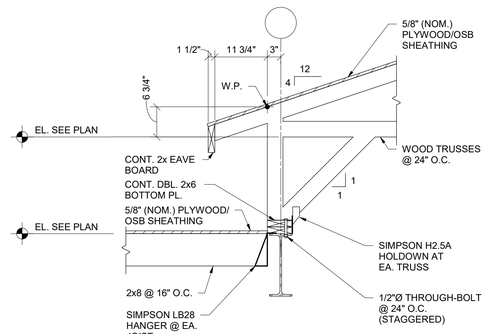

SECTION 2
3/4" = 1'-0"

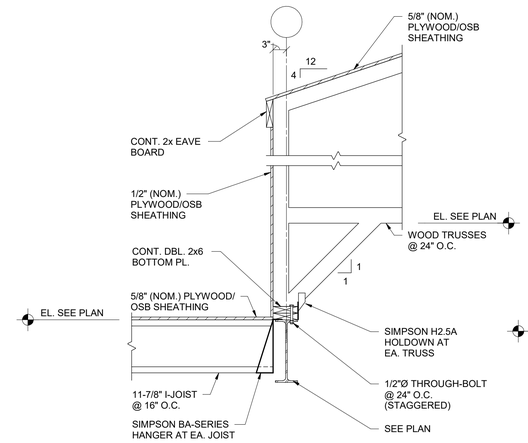

SECTION 3
3/4" = 1'-0"

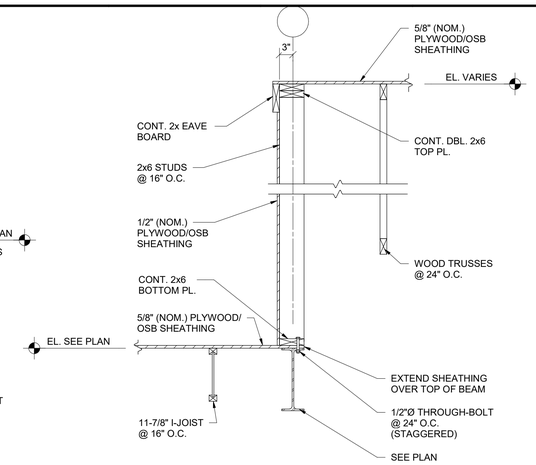

SECTION 4
3/4" = 1'-0"

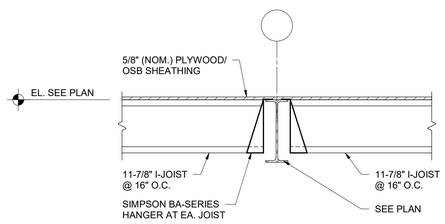

SECTION 5
3/4" = 1'-0"

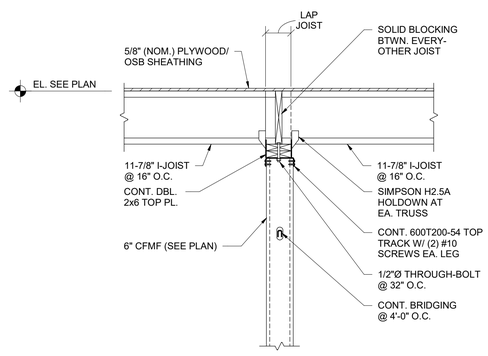

SECTION 6
3/4" = 1'-0"

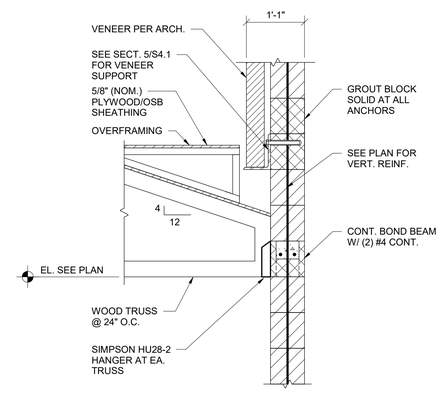

SECTION 7
3/4" = 1'-0"

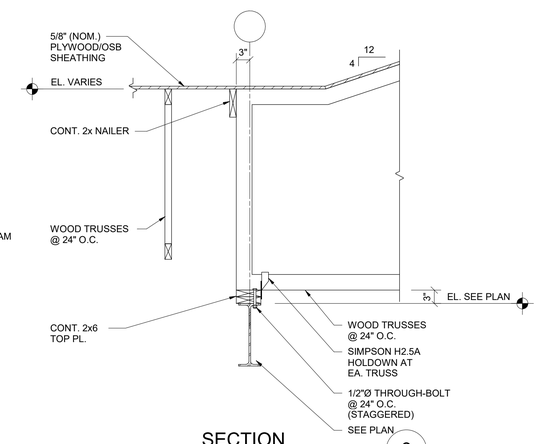

SECTION 8
3/4" = 1'-0"

App Architecture
creative focused design
615 Woodside Drive, Englewood, Ohio 45322
T 937.836.8898 F 937.832.3696
www.app-arch.com

STATE OF OHIO
STANLEY N. FULLER
E-67146
REGISTERED
PROFESSIONAL ENGINEER

MIAMI COUNTY ONE STOP CENTER
BOARD OF COMMISSIONERS FOR MIAMI COUNTY, OHIO
BARNHART ROAD, TROY, OHIO 45373

ISSUE

NO.	DATE	DESCRIPTION
	04/08/2022	FOR CONSTRUCTION

DATE	04/08/2022
JOB NO.	3923.00
DRAWN	CMS
CHECKED	SNF

COPYRIGHT © 2022 - App Architecture, Inc.

TITLE
FRAMING DETAILS

SHEET NO.
S4.3

4/8/2022 1:56:36 PM

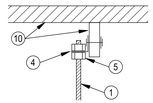

1. THREADED ROD. ATTACH TO STRUCTURE. PROVIDE DOUBLE NUT. ADJUST NUTS & RODS FOR PROPER ELEVATION.
2. STEEL BAND PIPE HANGER. EQUAL TO ANVIL FIG. 260.
3. PIPE.
4. 90 DEGREE SIDE BEAM BRACKET WITH THREADED ROD INTO WOOD.
5. RETAINING NUTS & WASHERS.
6. WOOD DECK & BEAM.

WOOD CONSTRUCTION

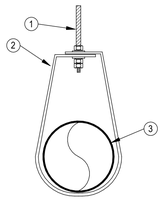

1 TYPICAL PIPE HANGER
N.T.S.

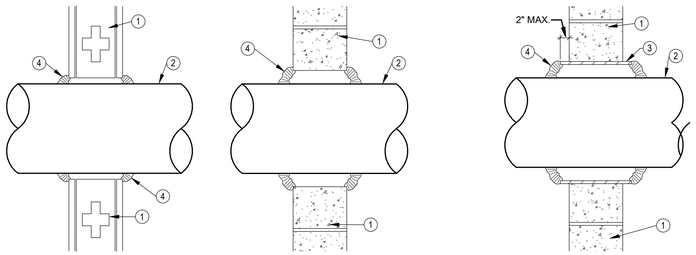

GYPSUM CONSTRUCTION
ALL PIPE SIZES

CONCRETE/MASONRY CONSTRUCTION
1/2" - 1.5" PIPES

CONCRETE/MASONRY CONSTRUCTION
2" AND LARGER PIPES

1. FULL HEIGHT INTERIOR WALL.
2. PIPE OR TUBING.
3. SCHEDULE 40 STEEL PIPE SLEEVE CAST OR GROUTED INTO WALL ASSEMBLY. ENDS FLUSH OR MAX. 2" BEYOND WALL SURFACE.
4. CAULK TO FILL VOID AT WALL/SLEEVE OPENING TO PREVENT THE PASSAGE OF SMOKE.

2 PIPE PENETRATIONS THRU NON-RATED WALLS
N.T.S.

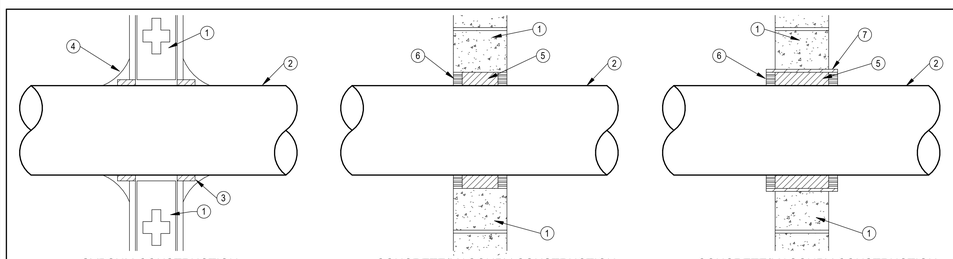

GYPSUM CONSTRUCTION
ALL PIPE SIZES

CONCRETE/MASONRY CONSTRUCTION
1/2" - 1.5" PIPES

CONCRETE/MASONRY CONSTRUCTION
2" AND LARGER PIPES

FIRESTOPPING MATERIALS/INSTALLATION

- MANUFACTURERS: 3M FIRE PROTECTION PRODUCTS
  HILTI FIRESTOP SYSTEMS
- FIRESTOPPING MATERIAL INSTALLATION SHALL BE PER THE MANUFACTURERS DETAILED INSTALLATION DIAGRAMS AND INSTRUCTIONS.
- F-RATING OF PENETRATION SHALL BE NO LESS THAN THE FIRE RATING OF THE WALL.
- SUBMITTAL SHALL INCLUDE PRODUCT DATA AND DETAILED INSTALLATION SYSTEM DIAGRAMS.

1. RATED WALL ASSEMBLY.
2. METALLIC PIPE OR TUBING.
3. APPROVED FIRESTOPPING VOID/CAVITY MATERIAL.
4. APPROVED FIRESTOPPING CAULK OR SEALANT.
5. PACKING MATERIAL, MINERAL WOOL BATT INSULATION.
6. APPROVED FIRESTOPPING CAULK OR SEALANT FLUSH WITH SURFACE OF WALL OR EDGE OF SLEEVE.
7. SCHEDULE 40 STEEL PIPE SLEEVE CAST OR GROUTED INTO WALL ASSEMBLY. ENDS FLUSH OR MAX. 2" BEYOND WALL SURFACE.

3 PIPE PENETRATIONS THRU FIRE RATED WALLS
N.T.S.

FIRE SUPPRESSION PIPING

GENERAL NOTES:

PIPING SHALL CONFORM TO OBC REQUIREMENTS.

PIPING INSTALLATION AND TESTING SHALL COMPLY WITH NFPA 13 (2016 EDITION).

PROVIDE PIPING SLEEVES AT WALLS IN NEW CONSTRUCTION.

PIPING SHALL BE PITCHED FOR DRAINAGE.

PROVIDE DIELECTRIC FITTINGS FOR TRANSITIONS BETWEEN FERROUS AND NON-FERROUS PIPING SYSTEMS.

CLOSE OPEN ENDS OF PIPING DURING CONSTRUCTION.

PIPE AND TUBING SHALL BE CUT AND FABRICATED TO FIELD MEASUREMENTS AND RUN PARALLEL TO NORMAL BUILDING LINES. PIPE INTERIOR SHALL BE CLEANED OF FOREIGN MATTER AND BURRS BEFORE ERECTION OF PIPE.

FLEXIBLE SPRINKLER CONNECTIONS SHALL NOT BE USED IN EXPOSED PIPING.

PIPING SHALL NOT BE RUN ABOVE ELECTRICAL SWITCHGEAR OR PANELBOARDS, NOR ABOVE THE ACCESS SPACE OF SUCH EQUIPMENT - NEC ARTICLE 384.

PIPING SYSTEM	TYPE
FIRE SUPPRESSION PIPING	S2, S3
WET PIPE SPRINKLER 2.5" AND LARGER	S1, S2, S3
WET PIPE SPRINKLER 2" AND SMALLER	S2
DRY PIPE SPRINKLER 2.5" AND LARGER	S4, S5
DRY PIPE SPRINKLER 2" AND SMALLER	S4
FINAL CONNECTION TO SPRINKLER HEAD	S2, F1

TYPE	DESCRIPTION	TYPE	DESCRIPTION
S1	**ROLL GROOVED BLACK STEEL** SCHEDULE 10, ASTM A135 OR ASTM A795 MALLEABLE/DUCTILE FITTINGS NITRILE /EPDM GASKETS ASTM A47/A47M OR A536	S4	**THREADED GALVANIZED STEEL** SCHEDULE 40, ASTM A53 OR ASTM A795, GRAY-IRON THREADED FITTINGS ASME B16.4, CLASS 125, STANDARD PATTERN
S2	**THREADED BLACK STEEL** SCHEDULE 40, ASTM A53 OR ASTM A795, 150 LB. MALLEABLE OR C.I. SCREWED FITTINGS	S5	**ROLL/CUT GROOVED GALVANIZED STEEL** SCHEDULE 40, ASTM A53 OR ASTM A795, MALLEABLE/DUCTILE FITTINGS NITRILE /EPDM GASKETS ASTM A47/A47M OR A536
S3	**ROLL/CUT GROOVED BLACK STEEL** SCHEDULE 40, ASTM A53 OR ASTM A795 MALLEABLE/DUCTILE FITTINGS NITRILE /EPDM GASKETS ASTM A47/A47M OR A536	F1	**FLEXIBLE SPRINKLER HOSE FITTING** 36" LENGTH MAXIMUM FULLY STAINLESS STEEL FLEXIBLE HOSE WITH CEILING BRACKET UL 2443 AND FM 1637 175 PSI RATING FOLLOW FM STANDARDS FOR BEND RADIUS AND NUMBER OF BENDS

GENERAL REQUIREMENTS

1. PROVIDE COMPLETE AND FUNCTIONAL FIRE SUPPRESSION SYSTEMS PER FIRE PLANS INCLUDING FURNISHING, INSTALLING, TESTING AND WARRANTY OF ALL WORK.
2. WORK SHALL BE IN ACCORDANCE WITH THE 2017 OHIO BUILDING AND MECHANICAL CODES INCLUDING REFERENCED CODES AND STANDARDS, ALL FEDERAL AND LOCAL CODES AND ALL APPLICABLE LAWS, ORDINANCES AND REGULATIONS.
3. BIDDERS ON FIRE SUPPRESSION WORK SHALL BE REGULARLY ENGAGED IN SPRINKLER SYSTEM WORK AND BE CERTIFIED BY THE STATE.
4. WORK SHALL BE PERFORMED USING BEST QUALITY INSTALLATION PRACTICE BY A QUALIFIED TRADE CONTRACTOR AND THEIR QUALIFIED SUBCONTRACTORS. ALL CONTRACTORS SHALL BE LICENSED AND BE BONDED FOR THE WORK.
5. ALL WORK SHALL BE PERFORMED IN ACCORDANCE WITH OSHA AND OWNER SAFETY STANDARDS AND PRACTICES. ALL ON SITE PERSONNEL SHALL BE SAFETY TRAINED AND OWNER CERTIFIED.
6. OBTAIN REQUIRED PERMITS RELATED TO THE WORK AND PAY ALL PERMIT AND INSPECTION FEES.
7. THE AUTHORITY HAVING JURISDICTION SHALL INSPECT AND APPROVE ALL WORK. PROVIDE A FINAL CERTIFICATE OF APPROVAL FROM THE AUTHORITY HAVING JURISDICTION AND PRESENT TO THE OWNER BEFORE REQUESTING FINAL PAYMENT AND RELEASE OF RETAINAGE.
8. PERFORM A FLOW TEST TO SERVE AS THE BASIS FOR HYDRAULIC CALCULATIONS. DEVELOP HYDRAULIC CALCULATIONS AND INSTALLATION DRAWINGS NEEDED TO OBTAIN APPROVAL FROM AUTHORITY HAVING JURISDICTION. CALCULATIONS SHALL INCLUDE A 10% SAFETY FACTOR.
9. PROTECT ALL FURNISHED MATERIAL AND EQUIPMENT FROM THEFT AND DETERIORATION OR CONTAMINATION DUE TO WEATHER OR CONSTRUCTION ACTIVITIES.
10. PROTECT OWNER'S PROPERTY AND PROPERTY OF OTHER CONTRACTORS.
11. REMOVE ALL CONSTRUCTION DEBRIS FROM SITE. RECYCLE DEBRIS WHERE POSSIBLE. DISPOSE OF ALL HAZARDOUS MATERIAL IN ACCORDANCE WITH ENVIRONMENTAL LAWS.
12. PROVIDE ALL CUTTING AND PATCHING REQUIRED TO INSTALL MATERIAL AND EQUIPMENT.
13. PROVIDE APPROPRIATE FIRESTOPPING SYSTEM FOR ANNULAR SPACE OPENINGS AROUND PIPE PENETRATIONS THROUGH FIRE RESISTANCE RATED CONSTRUCTION. ANNULAR SPACE OPENINGS AT PIPE PENETRATIONS IN NON RATED CONSTRUCTION TO BE CLOSED AIR AND WATER TIGHT.
14. MATERIALS AND EQUIPMENT SHALL BE ONE OF THE BRAND OR MANUFACTURERS LISTED OR AN APPROVED EQUAL.
15. ELECTRONIC SHOP DRAWINGS SHALL BE PROVIDED IN .PDF FORMAT FOR THE ENGINEER'S APPROVAL FOR ALL MATERIALS AND EQUIPMENT. SHOP DRAWINGS SHALL BE SPECIFICALLY EDITED TO ELIMINATE SUPERFLUOUS INFORMATION AND SHALL CLEARLY SHOW SPECIFICS FOR THE MATERIAL AND EQUIPMENT PROVIDED.
16. COORDINATE INSTALLATION OF ACTUAL EQUIPMENT AND SYSTEMS PROVIDED WITH OTHER TRADES AND NEW OR EXISTING CONDITIONS.
17. INSTALL ALL MATERIALS AND EQUIPMENT IN ACCORDANCE WITH MANUFACTURER'S RECOMMENDATIONS AND REQUIREMENTS.
18. INSTALL ALL MATERIAL AND EQUIPMENT TO PROVIDE REQUIRED CLEARANCES TO MEET CODE REQUIREMENTS, MANUFACTURER'S RECOMMENDATIONS AND MAINTENANCE SERVICE.
19. ALL WORK AREAS SHALL BE CLEANED TO MATCH ORIGINAL CONDITION.
20. MAINTAIN RECORD DRAWINGS AND PROVIDE TO THE OWNER OR HIS AGENT.
21. PROVIDE TWO (2) BOUND, PAPER COPIES OF ALL OPERATING AND MAINTENANCE MANUALS. PROVIDE AN ELECTRONIC COPY OF THE OPERATING AND MAINTENANCE MANUAL.
22. PROVIDE WARRANTY FOR ALL WORKMANSHIP, EQUIPMENT AND MATERIAL. WARRANTY SHALL BE 1 YEAR FOR PARTS AND LABOR, PROVIDE EXTENDED WARRANTY PERIOD FOR PARTS AND/OR LABOR AS IDENTIFIED OR AS STANDARD FOR CERTAIN ITEMS OF EQUIPMENT.

GENERAL NOTES

A. PROVIDE A COMPLETE SPRINKLER SYSTEM THROUGHOUT THE BUILDING. BUILDING SHALL BE CONSIDERED FULLY SUPPRESSED AT COMPLETION OF PROJECT.

B. ALL FIRE SUPPRESSION EQUIPMENT SHALL BE UL LISTED FOR FIRE SUPPRESSION SERVICE.

C. ALL FIRE SUPPRESSION SYSTEMS (SERVICE MAIN, FIRE DEPT. CONNECTION, SPRINKLER SYSTEM, INSPECTOR TEST, DRAIN, ETC.) SHALL BE HYDROSTATICALLY TESTED AT 200 PSI FOR 2 HOURS WITH NO VISIBLE LEAKAGE. ALL CONCEALED PIPING SHALL BE AIR TESTED, WITH NO LEAKAGE, PRIOR TO FILLING SYSTEM WITH WATER. THE FIRE PROTECTION CONTRACTOR SHALL NOTIFY ALL AUTHORITIES HAVING JURISDICTION 24 HOURS PRIOR TO THE TEST TO ALLOW AHJ TO WITNESS ALL TESTS.

D. ALL VALVES CONTROLLING WATER SUPPLIES SHALL BE PROVIDED WITH TAMPER SWITCHES (SEE NOTE E).

E. THE FIRE SPRINKLER SYSTEM SHALL BE SUPERVISED BY AN APPROVED CENTRAL STATION FIRE ALARM SYSTEM IN ACCORDANCE WITH O.B.C. AND N.F.P.A. 72.

F. THE FIRE SUPPRESSION CONTRACTOR SHALL COORDINATE WIRING OF ELECTRICAL FIRE SUPPRESSION DEVICES AND EQUIPMENT WITH THE ELECTRICAL AND/OR FIRE ALARM CONTRACTOR. ALL FIRE ALARM WIRING BY ELECTRICAL CONTRACTOR. ALL DEVICES SHALL BE FURNISHED AND INSTALLED BY THE FIRE SUPPRESSION CONTRACTOR.

G. THE FIRE SUPPRESSION CONTRACTOR SHALL COORDINATE THE LAYOUT OF THE FIRE SUPPRESSION SYSTEM WITH ALL TRADES PRIOR TO INSTALLATION.

H. THE FIRE SUPPRESSION CONTRACTOR SHALL CENTER (WITHIN 1") ALL CONCEALED SPRINKLER HEADS INSTALLED IN ACOUSTICAL LAY-IN CEILING TILES. ALL PENDENT SPRINKLER HEADS IN CEILINGS SHALL BE SYMMETRICAL WITH LIGHTING AND AIR DEVICES.

I. THE FIRE DEPARTMENT CONNECTION IS LOCATED AT THE METER PIT. SEE CIVIL DRAWINGS.

J. LOCAL SPRINKLER ALARM AND REMOTE ALARM AND SUPERVISION SHALL BE THRU THE FIRE ALARM SYSTEM PROVIDED BY THE E.C.

K. CONCEALED, NONCOMBUSTIBLE ATTIC SPACES DO NOT REQUIRE SPRINKLERS.

L. FINAL APPROVAL IS SUBJECT TO ACCEPTANCE AND TESTING BY ALL AHJ.

DESIGN CRITERIA

1. DESIGN AND INSTALLATION OF SERVICE MAIN, WET PIPE SPRINKLER SYSTEM, AND DRY PIPE SPRINKLER SYSTEM SHALL COMPLY WITH THE REQUIREMENTS OF THE 2017 OHIO BUILDING CODE, N.F.P.A. 13 (2016 EDITION), AND ALL AUTHORITIES HAVING JURISDICTION (AHJ).
2. WORKING PLANS AND HYDRAULIC CALCULATIONS SHALL BE PREPARED, SUBMITTED, AND APPROVED PRIOR TO INSTALLATION, BY THE FIRE SUPPRESSION CONTRACTOR. PLANS SHALL INCLUDE ALL ITEMS LISTED IN N.F.P.A. 13.
3. WATER SUPPLY DATA: THE FIRE SUPPRESSION CONTRACTOR IS RESPONSIBLE FOR CONDUCTING A FLOW TEST TO OBTAIN CURRENT WATER SUPPLY DATA FROM THE NEW WATER DISTRIBUTION SYSTEM FOR USE IN THE HYDRAULIC CALCULATIONS.
4. HYDRAULIC DESIGN CRITERIA FOR LIGHT HAZARD AREAS: (ALL AREAS EXCEPT AS NOTED OTHERWISE)

DENSITY:	0.10 GPM/SQ.FT.
DESIGN AREA:	MOST DEMANDING 1500 SQ. FT. (REDUCTION WITH QUICK RESPONSE HEADS PERMITTED)
MAX. SPRINKLER COVERAGE:	225 SQ. FT./HEAD
HOSE DEMAND:	100 GPM
DURATION:	30 MINUTES

1. HYDRAULIC DESIGN CRITERIA FOR ORDINARY HAZARD (GROUP 1) AREAS: (STORAGE ROOMS, MECHANICAL ROOMS, JANITOR'S ROOMS, KITCHEN, COMMUNICATION ROOMS)

DENSITY:	0.15 GPM/SQ.FT.
DESIGN AREA:	MOST DEMANDING 1500 SQ.FT.
MAX. SPRINKLER COVERAGE:	130 SQ. FT./HEAD
HOSE DEMAND:	250 GPM
DURATION:	60 MINUTES

2. HYDRAULIC DESIGN CRITERIA FOR ORDINARY HAZARD (GROUP 2) AREAS: (INSPECTION BAYS).

DENSITY:	0.2 GPM/SQ.FT.
DESIGN AREA:	MOST DEMANDING 1500 SQ.FT.
MAX. SPRINKLER COVERAGE:	130 SQ. FT./HEAD
HOSE DEMAND:	250 GPM
DURATION:	60 MINUTES

3. ALL SPRINKLER HEADS SHALL BE QUICK RESPONSE TYPE.
4. SPRINKLER HEADS IN AREAS WITH FINISHED CEILINGS SHALL BE CONCEALED PENDENT TYPE WITH FLAT PLATE AND WHITE FINISH.
5. SPRINKLER HEADS IN AREAS WITH NO CEILINGS SHALL BE BRASS UPRIGHTS.

GENERAL LEGEND

EC	ELECTRICAL CONTRACTOR.
FC	FIRE SUPPRESSION CONTRACTOR.
GC	GENERAL CONTRACTOR.
HC	HVAC CONTRACTOR.
PC	PLUMBING CONTRACTOR.
TC	TEMPERATURE CONTROLS CONTRACTOR.
NIC	NOT IN CONTRACT.
AFF	ABOVE FINISHED FLOOR - TO BOTTOM OF ITEM UNLESS INDICATED OTHERWISE.
ES	EQUIPMENT SUPPLIER.
3	NOTE SYMBOL - APPLIES ONLY TO SHEET ON WHICH IS SHOWN.
2	DETAIL NOTE SYMBOL - APPLIES ONLY TO DETAIL ON WHICH IS SHOWN.
H-1	EQUIPMENT REFERENCE SYMBOL.
123	ROOM NUMBER.
B / H2	DETAIL SYMBOL DETAIL "B" SHOWN ON SHEET H2.
1 / H3.1	SECTION SYMBOL SECTION "A" DESIGNATION, SHOWN ON SHEET H1.

FIRE SUPPRESSION

F	FIRE SUPPRESSION SYSTEM
S	SPRINKLER SYSTEM
DS	DRY SPRINKLER SYSTEM
	GATE VALVE
	VALVE
	VALVE ON RISER
	CHECK VALVE
	SUPERVISED VALVE
FS	FLOW SWITCH
	CAP
	CONNECTION, BOTTOM
	CONNECTION, TOP
	ELBOW, 90°., LONG RADIUS
	ELBOW, 45°.
	ELBOW, TURNED UP
	ELBOW TURNED DOWN
	REDUCER
	UNION
P	PRESSURE GAUGE
	SPRINKLER BEING REMOVED
	PENDANT SPRINKLER
	UPRIGHT SPRINKLER
	SIMI-RECESSED SPRINKLER
	CONCEALED SPRINKLER
	INSTITUTIONAL PENDANT SPRINKLER
	SIDEWALL SPRINKLER

FIRE SUPPRESSION INDEX OF DRAWINGS

SHEET	DRAWING TITLE
F0.1	LEGENDS AND SCHEDULES
F1.1	FIRST FLOOR PLAN

NAUMAN & ZELINSKI LLC.
204 S. Ludlow Street Suite 400 Dayton, Ohio 45402
Phone: (937) 223-3821 • Fax: (937) 223-3849

App Architecture
creative focused design
615 Woodside Drive, Englewood, Ohio 45322
T 937.836.8898 F 937.832.3696
www.app-arch.com

STATE OF OHIO
JEFFREY D. ZELINSKI
63822
REGISTERED
PROFESSIONAL ENGINEER

MIAMI COUNTY ONE STOP CENTER
BOARD OF COMMISSIONERS FOR MIAMI COUNTY, OHIO
BARNHART ROAD, TROY, OHIO 45373

ISSUE

NO.	DATE	DESCRIPTION
1	04/08/2022	FOR CONSTRUCTION

DATE	04/08/22
JOB NO.	3923.00
DRAWN	DG
CHECKED	JDZ

COPYRIGHT © 2022 - App Architecture, Inc.

TITLE
LEGENDS AND SCHEDULES

SHEET NO.
F0.1

4/8/2022 1:20:03 PM

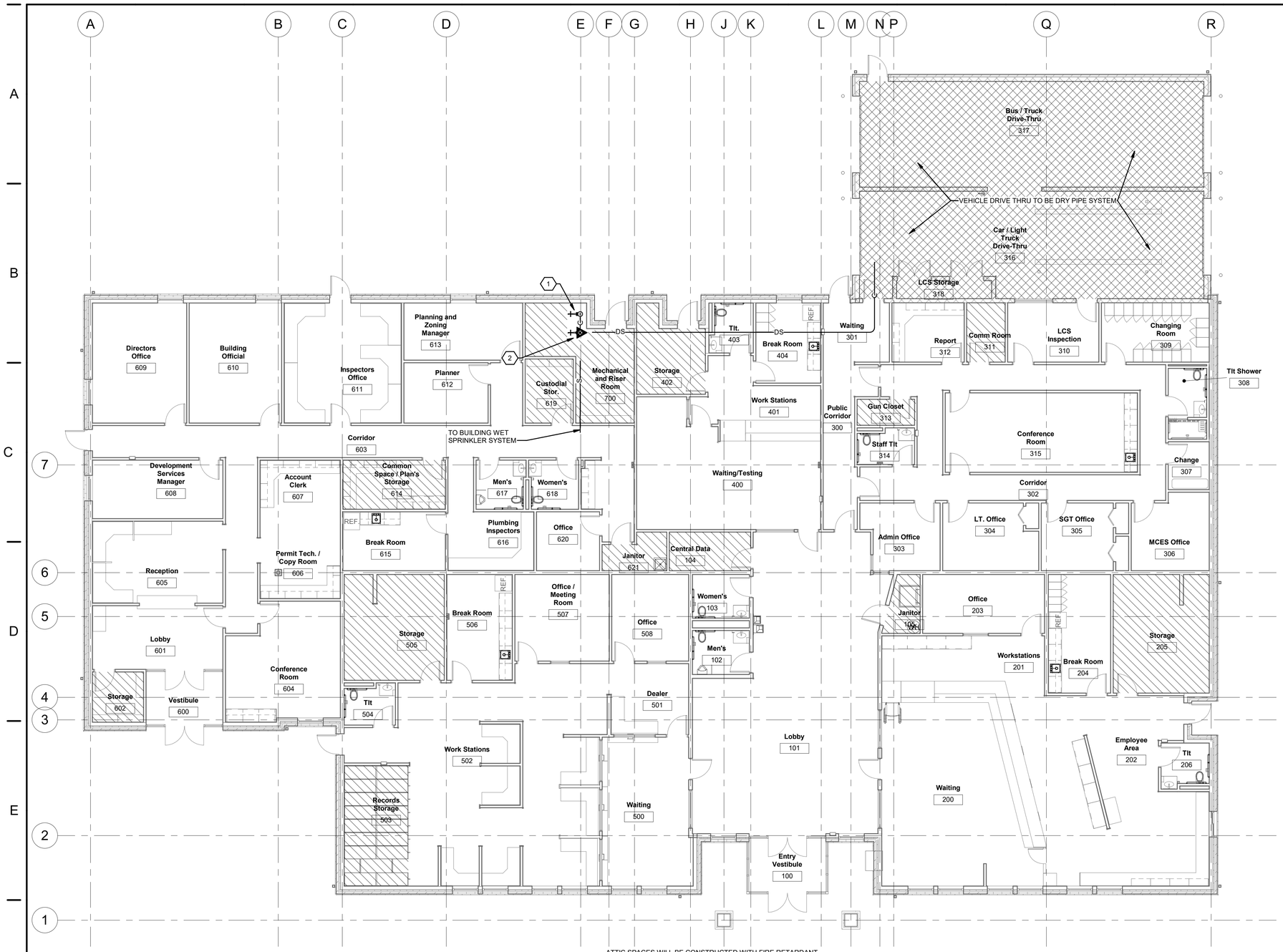

ATTIC SPACES WILL BE CONSTRUCTED WITH FIRE RETARDANT WOOD AND WILL BE CONSIDERED NON-COMBUSTIBLE SPACE AND NOT REQUIRED SPRINKLERS (2016 NFPA 13 8.15.1.2.11)

FIRST FLOOR FIRE SUPPRESSION

0 4 8 16 24 32 40

SCALE: 1/8"=1'-0"

N

CONSTRUCTION NOTES

1. FIRE SERVICE ENTRANCE. SEE DETAIL THIS SHEET.
2. DRY PIPE VALVE SERVING INSPECTION DRIVE THRU AREAS.

HAZARD CLASSIFICATIONS

(NO HATCH)

LIGHT HAZARD
DENSITY - 0.10GPM/SP
MAX AREA PER HEAD - 225 SF
HOSE ALLOWANCE - 100 GPM

ORDINARY HAZARD GROUP 1
DENSITY - 0.15GPM/SP
MAX AREA PER HEAD - 130 SF
HOSE ALLOWANCE - 250 GPM

ORDINARY HAZARD GROUP 2
DENSITY - 0.20GPM/SP
MAX AREA PER HEAD - 130 SF
HOSE ALLOWANCE - 250 GPM

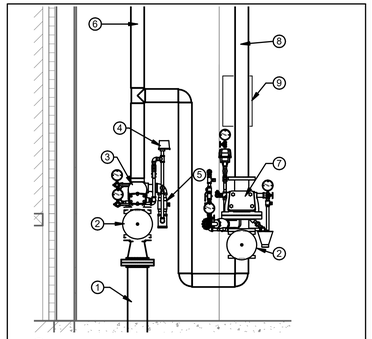

1. 6" FIRE SERVICE ENTRANCE. SEE CIVIL DRAWINGS.
2. 4" OS & Y VALVE.
3. 4" ALARM CHECK VALVE WITH TRIM.
4. MAIN FLOW SWITCH.
5. MAIN DRAIN VALVE. PIPE DISCHARGE TO OUTSIDE.
6. TO BUILDING WET PIPE SPRINKLER SYSTEM.
7. 4" DRY PIPE VALVE AND TRIM (SERVING INSPECTION DRIVE THRU). PIPE DRAIN TO OUTSIDE.
8. TO INSPECTION DRIVE THRU AREA DRY PIPE SPRINKLER SYSTEM.
9. PIPE MOUNTED AIR MAINTENANCE COMPRESSOR.

1 **FIRE SERVICE**
N.T.S.

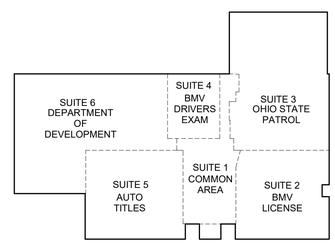

SUITE KEY PLAN

NAUMAN & ZELINSKI LLC.
204 S. Ludlow Street Suite 400 Dayton, Ohio 45402
Phone: (937) 223-3821 - Fax: (937) 223-3849

App Architecture
creative focused design
615 Woodside Drive, Englewood, Ohio 45322
T 937.836.8898 F 937.832.3696
www.app-arch.com

STATE OF OHIO
JEFFREY D. ZELINSKI
63822
REGISTERED
PROFESSIONAL ENGINEER

MIAMI COUNTY ONE STOP CENTER
BOARD OF COMMISSIONERS FOR MIAMI COUNTY, OHIO
BARNHART ROAD, TROY, OHIO 45373

ISSUE

NO.	DATE	DESCRIPTION
1	04/08/2022	FOR CONSTRUCTION

DATE	04/08/22
JOB NO.	3923.00
DRAWN	DG
CHECKED	JDZ

COPYRIGHT © 2022 - App Architecture, Inc.

TITLE
FIRST FLOOR PLAN

SHEET NO.
F1.1

4/8/2022 1:20:06 PM

PLUMBING FIXTURE SCHEDULE

ITEM	FIXTURE DESCRIPTION	FIXTURE	SERVICES H.W.	SERVICES C.W.	SERVICES SAN.	SERVICES VENT	MTG. HGT.	TRIM REQUIREMENTS SUPPLY	TRIM REQUIREMENTS STOPS	TRIM REQUIREMENTS WASTE	TRIM REQUIREMENTS TRAP	TRIM REQUIREMENTS CARRIERS	TRIM REQUIREMENTS ACCESSORIES	NOTES
W1	WATER CLOSET/ VIT. CHINA/ WALL HUNG/ ELECTRONIC FLUSH VALVE/ HARDWIRED/ 1.6 GPF/ 1,000 MG MaP RATING/ ACCESSIBLE	AMERICAN STANDARD # 2257.001	--	1"	4"	2"	17" TO RIM	SLOAN # SLOAN 111SFSM-1.6-HW	UNIT	UNIT	INTEGRAL	ZURN #ZN1202 SERIES	SEAT BEMIS #1955SSCT	
L1	LAVATORY/ SOLID SURFACE INTEGRAL WITH C'TOP/PLUG-IN ELECTRONIC FAUCET/ 0.5 GPM / ASSE 1070 DEVICE	BY OTHERS	1/2"	1/2"	1 1/2	1 1/4"	--	SLOAN EAF-200-PLG-CP-0.5G PM-AER-IR-IQ-FCT	MCGUIRE # LFBV170	MCGUIRE # 155WC	MCGUIRE # 8902CNC	---	POWERS #LFE480	
U1	URINAL/ VIT. CHINA/ WALL HUNG/ ELECTRONIC FLUSH VALVE/ HARDWIRED/ 1 GPF/ ACCESSIBLE	AMERICAN STANDARD # 6590.001	--	3/4"	2"	1 1/2"	17" TO LIP	SLOAN # SLOAN 186-SFSM-1.0-HW	UNIT	UNIT	INTEGRAL	ZURN #Z1222	---	
S1	SINK/ STAINLESS STEEL/ UNDER-COUNTER MOUNTED/ CAST BRASS SINGLE LEVER FAUCET	ELKAY # ELUH2115	1/2"	1/2"	1 1/2"	1 1/4"	--	AMERICAN STANDARD # 4433.001...	MCGUIRE # LFBV170	MCGUIRE # 1151A	MCGUIRE # 8912CNC	---	---	
S2	SINK/ STAINLESS STEEL/ UNDER-COUNTER MOUNTED/ CAST BRASS SINGLE LEVER FAUCET/ GARBAGE DISPOSAL 3/4 HP NOISE...	ELKAY # ELUH2115	1/2"	1/2"	1 1/2"	1 1/4"	--	AMERICAN STANDARD # 4433.001...	MCGUIRE # LFBV170	IN-SINK-ERATOR # ESSENTIAL COMPACT	MCGUIRE # 8912CNC	---	---	
M1	MOP SINK/ "MOLDED STONE"/ FLOOR SET/ WALL MOUNTED FAUCET WITH INTEGRAL CHECK STOPS/ 24" SQ/ STAINLESS STEEL...	FIAT # MSBID2424 & # QIC3SN	1/2"	1/2"	3"	1 1/2"	36" FAUCET	AMERICAN STANDARD # 8354.112	INTEGRAL	UNIT	SAME AS UNDERGROUND WASTE	---	FIAT # MSG2424	
SH1	SHOWER/ SOLID SURFACE SURROUND AND / THERMOSTATIC MIXING VALVE/ HAND HELD AND FIXED SHOWER HEAD/ DIVERTER VALVE	BY OTHERS	1/2"	1/2"	3"	--	42" VALVE 72" HEAD	POWERS # E710-M-2-N-Y-W	UNIT	UNIT	SAME AS UNDERGROUND WASTE	---	---	1
F1	DRINKING FOUNTAIN/ WALL MOUNTED/ BI-LEVEL WITH BOTTLE FILLER	OASIS # PG8EBFSL	--	1/2"	1 1/4"	1 1/4"	34" TO LOW BUBBLER	UNIT	BALL VALVE	UNIT	MCGUIRE # 8902CNC	ZURN # Z1225	---	
HB1	HOSE BIBB/ WALL MOUNTED/ RECESSED/ NON-FREEZE/ ANTI-SIPHON/ AUTOMATIC DRAINING/ CERAMIC DISC	ZURN # Z1320-EZ-WC	--	3/4"	--	--	APPROX. 24" ABOVE GRADE	---	---	---	---	---	---	2.
WB1	REFRIGERATOR ICE MAKER WALL BOX/ HD PLASTIC/ 6' ST.ST. HOSE	OATEY # 39142	--	1/2"	--	--	30"	UNIT	---	---	---	---	---	

EQUALS

CHICAGO FAUCET - AMERICAN STANDARD FAUCETS, KOHLER, ZURN, T&S BRASS

ZURN - SLOAN, DELANEY

ELKAY - JUST, ADVANCED TABCO,

MCGUIRE - WATTS, BRASSCRAFT

MCGUIRE "PROWRAP" - TRUEBRO "PROWRAP", PLUMBEREX "PROEXTREME"

ZURN CARRIERS - J.R.SMITH, WATTS, WADE, MI-FAB, JOSAM

NOTES:

1. SHOWER VALVE AND HAND HELD SHOWER ARE TO BE LOCATED ON THE LONG BACK WALL OF THE SHOWER ADJACENT TO THE SEAT. THE FIXED HEAD SHALL BE LOCATED ON THE END WALL NEAR THE ENTRANCE. PROVIDE TEMPERED WATER PIPING FROM THE VALVE TO THE FIXED HEAD AND INSULATE AS FOR HOT WATER.
2. COORDINATE EXACT MOUNTING HEIGHT WITH MASONRY COURSING.
3. PROVIDE TRANSFORMER FOR FLUSH VALVES. SLOAN # EL-451. TURN TRANSFORMER OVER TO E.C. WHO WILL MOUNT AND POWER UNIT. P.C. SHALL PROVIDE ALL LOW VOLTAGE WIRING FROM TRANSFORMER TO FLUSH VALVES. A MAXIMUM OF 10 FLUSH VALVES ARE ALLOWED ON EACH TRANSFORMER. FOLLOW MANUFACTURER'S RECOMMENDATIONS.

DRAIN SCHEDULE

TAG	DESCRIPTION	MANUFACTURER (J.R. SMITH OR EQUAL) MODEL NUMBER	OUTLET SIZE	FEATURES ANCHOR FLANGE	FEATURES FLASHING CLAMP	FEATURES DECK PLATE	FEATURES DBL/ DRAINAGE	FEATURES SECONDARY STRAINER	STRAINER/GRATE TOP/STRAINERSIZE	STRAINER/GRATE FLAT	STRAINER/GRATE DOME	STRAINER/GRATE FUNNEL	STRAINER/GRATE HALF OPEN	STRAINER/GRATE ADJUSTABLE	NOTES
FD1	FLOOR DRAIN/ CAST IRON BODY/ NICKEL BRONZE TOP/ ADJUSTABLE/ FUNNEL	ZURN # Z415E	3"	X					7" DIA	X		X		X	2.
FD2	FLOOR DRAIN/ PVC BODY AND TOP/ MEDIUM DUTY/ LOOSE HALF OPEN GRATE/ FLAT STRAINER IN BOTTOM	SIOUX CHIEF # 861-4P26	4"	X				X	11"	X			X		
TD1	TRENCH DRAIN/ HDPE CONSTRUCTION/ PRE-SLOPED 3.5"-4.1" DEEP/ HEAVY DUTY DUCTILE IRON SLOTTED GRATE/ CLOSED ON HIGH END/ DRAINS THRU ADJACENT...	ZURN # Z886-8601-E1-DBG	--						4" WIDE	X					1.
TD2	TRENCH DRAIN/ HDPE CONSTRUCTION/ PRE-SLOPED 4.1"-4.7" DEEP/ HEAVY DUTY DUCTILE IRON SLOTTED GRATE/ DRAINS THRU ADJACENT SECTIONS	ZURN # Z886-8602-DBG	--						4" WIDE	X					1.
TD3	TRENCH DRAIN/ HDPE CONSTRUCTION/ PRE-SLOPED 4.7"-5.3" DEEP/ HEAVY DUTY DUCTILE IRON SLOTTED GRATE/ DRAINS THRU ADJACENT SECTIONS	ZURN # Z886-8603-DBG,	--						4" WIDE	X					1.
TD4	TRENCH DRAIN/ HDPE CONSTRUCTION/ PRE-SLOPED 4.7"-5.3" DEEP/ HEAVY DUTY DUCTILE IRON SLOTTED GRATE/ BOTTOM OUTLET	ZURN # Z886-8603-DBG-U3	3"						4" WIDE	X					1.
RD	ROOF DRAIN/ CAST IRON BODY AND DOME/ TOP DECK PLATE	ZURN # ZC100-DP	6"		X	X	X		15 7/8" DIA.		X				
SRD	SECONDARY ROOF DRAIN/ CAST IRON BODY AND DOME/TOP DECK PLATE/ 2" EXTERNAL DAM	ZURN # ZC100-DP-89	6"		X	X	X		15 7/8" DIA.		X				
SSO	SECONDARY STORM OUTLET	ZURN # ZF199	8"												
FCO	CLEANOUT/ FLOOR SET/ NICKEL-BRONZE TOP/ CAST IRON BODY/ MIP THREADED CONNECTION/ ABS PLUG	ZURN # ZN1400-K		X						X				X	

NOTES:

1. INSTALL TRECH DRAIN PER MANUFACTURER'S RECOMMENDATIONS.
2. PROVIDE ASSE 1072 TRAP SEAL DEVICE.

GENERAL NOTES - PLUMBING

A. ALL WORK SHALL BE N ACCORDANCE WITH THE 2017 VERSION OF THE OHIO BUILDING AND PLUMBING CODES, INCLUDING REFERENCED CODES AND STANDARDS.

B. OBTAIN A PLUMBING PERMIT AND SECURE INSPECTION AND APPROVAL OF THE CODE OFFICIAL.

C. COORDINATE EACH ROUGH-IN INSTALLATION REQUIREMENTS AND LOCATIONS WITH OTHER TRADES, ACTUAL EQUIPMENT OR CABINETRY PROVIDED AND FIELD CONDITIONS BEFORE PERFORMING WORK.

D. REFER TO ARCHITECTURAL CODE PLANS FOR LOCATIONS OF FIRE WALLS AND SMOKE PARTITIONS.
IN SMOKE PARTITIONS FILL SPACE AROUND PENETRATIONS WITH AN APPROVED MATERIAL TO LIMIT THE FREE PASSAGE OF SMOKE.
IN FIRE WALLS SEAL ALL PENETRATIONS WITH AN APPROVED FIRE STOPPING PRODUCT, SEE SPECIFICATIONS.

E. REFER TO DIAGRAMS, DETAILS, AND SCHEDULES FOR PIPING AND PIPE SIZES NOT SHOWN ON PLAN OR ON DIAGRAMS.

F. ALL PIPING IS ABOVE THE CEILING (AT THE CEILING IN EXPOSED STRUCTURE AREAS) UNLESS OTHERWISE INDICATED ON PLAN.

G. ALL EQUIPMENT AND MATERIAL REQUIRED FOR COMPLETE AND FUNCTIONAL PLUMBING SYSTEMS ARE INCLUDED IN THE CONTRACT. THE WORK SCOPE IN THE PROJECT MANUAL DEFINES THE FINAL CONTRACTUAL RESPONSIBILITY TO PROVIDE SUPPORTING EQUIPMENT, MATERIALS, FINISHING, UTILITY COST, ETC (EXAMPLES: CONCRETE PADS, PAINTING, TEMPORARY ELECTRIC/GAS COSTS) FOR PRECEDENCE OVER OTHER SPECIFICATION SECTIONS OR DRAWING REQUIREMENTS. .

GENERAL LEGEND

EC	ELECTRICAL CONTRACTOR.
FC	FIRE PROTECTION CONTRACTOR.
GC	GENERAL CONTRACTOR.
HC	HVAC CONTRACTOR.
PC	PLUMBING CONTRACTOR.
TC	TEMPERATURE CONTROLS CONTRACTOR.
NIC	NOT IN CONTRACT.
AFF	ABOVE FINISHED FLOOR - TO BOTTOM OF ITEM UNLESS INDICATED OTHERWISE IN DRAWING.
ES	EQUIPMENT SUPPLIER.
3	NOTE SYMBOL - APPLIES ONLY TO SHEET ON WHICH IS SHOWN.
2	DETAIL NOTE SYMBOL - APPLIES ONLY TO DETAIL ON WHICH IS SHOWN.
H-1	EQUIPMENT REFERENCE SYMBOL.
123	ROOM NUMBER.
FD1	UP TO SYMBOL UP TO "FD1", SHOWN ON FLOOR ABOVE.

PLUMBING LEGEND

	SANITARY DRAIN
ST	STORM DRAIN ABOVE FLOOR OR GRADE
SST	SECONDARY STORM DRAIN ABOVE FLOOR
	VENT
	COLD WATER
	HOT WATER
	HOT WATER RETURN
G	NATURAL GAS
C.O.	CLEAN OUT
	SHUT-OFF VALVE, SEE SCHEDULE FOR TYPE
	CHECK VALVE
	BALANCING VALVE
	VALVE ON RISER
	UNION
R	REGULATOR
P	PRESSURE GAUGE
T	TEMPERATURE GAUGE
	CONNECTION, BOTTOM
	CONNECTION, TOP
	DIRECTION OF FLOW
	CAP
V.R.	VENT RISER
V.T.R.	VENT THRU ROOF
S.S.	SOIL STACK
V.S.	VENT STACK
D.S.	DOWNSPOUT (STORM)
S.D.S.	SECONDARY DOWNSPOUT (STORM)
S.S.O.	SECONDARY STORM OUTLET

PLUMBING INDEX OF DRAWINGS

SHEET	DRAWING TITLE
P0.1	LEGENDS AND SCHEDULES
P0.2	SPECIFICATIONS
P0.3	SPECIFICATIONS AND PIPING DETAILS
P1.0	UNDERFLOOR PIPING PLAN
P1.1	FIRST FLOOR PLAN
P1.1G	FIRST FLOOR PLAN NATURAL GAS
P1.2	ROOF PLAN
P2.1	DETAILS
P3.1	SOIL, WASTE, AND VENT DIAGRAM

NAUMAN & ZELINSKI LLC.
204 S. Ludlow Street Suite 400 Dayton, Ohio 45402
Phone: (937) 223-3821 • Fax: (937) 223-3848

App Architecture
creative focused design
615 Woodside Drive, Englewood, Ohio 45322
T 937.836.8898 F 937.832.3696
www.app-arch.com

STATE OF OHIO
JEFFREY D. ZELINSKI
63822
REGISTERED
PROFESSIONAL ENGINEER

MIAMI COUNTY ONE STOP CENTER
BOARD OF COMMISSIONERS FOR MIAMI COUNTY, OHIO
BARNHART ROAD, TROY, OHIO 45373

ISSUE

NO.	DATE	DESCRIPTION
1	04/08/2022	FOR CONSTRUCTION

DATE	04/08/22
JOB NO.	3923.00
DRAWN	DG
CHECKED	JDZ

COPYRIGHT © 2022 - App Architecture, Inc.

TITLE
LEGENDS AND SCHEDULES

SHEET NO.
P0.1

4/8/2022 1:21:16 PM

VALVE SCHEDULE

GENERAL NOTES FOR VALVES:

QUALITY ASSURANCE
VALVES SHALL COMPLY WITH ANSI, ASTM AND ASME.

VALVES ON DOMESTIC WATER SYSTEMS SHALL BE "LEAD FREE" IN ACCORDANCE WITH THE FEDERAL SAFE WATER ACT (S3874) DEFINITION AND CONFORM TO NSF 61.

GROOVED END VALVES SHALL CONFORM TO ANSI/AWWA C-606.

PRODUCTS
WORKING PRESSURES SHALL EXCEED THOSE IMPOSED BY THE SERVICE APPLIED.

VALVES WHICH ARE INSULATED SHALL HAVE EXTENDED SHAFTS.

PROVIDE FLOW MEASURING GAUGES WITH COCKS, HOSES & CONNECTORS FOR BALANCING VALVES. PROVIDE METERING TOOL.

PROVIDE HOSE ADAPTORS ON DRAIN VALVES.

SWEAT END VALVES OF EQUAL CONSTRUCTION ARE ACCEPTABLE IN LIEU OF SCREWED ENDS.

IN MECHANICALLY JOINED SYSTEMS, VALVES OF EQUAL CONSTRUCTION WITH COMPATIBLE ENDS ARE ACCEPTABLE AND MAY BE MANUFACTURED BY THE COUPLING MANUFACTURER.

VALVE MANUFACTURERS:
BALL VALVES - NIBCO, WATTS, MILWAUKEE, APOLLO, CONBRACO, CRANE.
BALANCING VALVES - BELL & GOSSETT, ARMSTRONG, WATTS.
CHECK VALVES - NIBCO, STOCKHAM, WATTS.

EXECUTION
VALVES SHALL BE INSTALLED WITH STEM ABOVE CENTERLINE OF PIPE.

PIPING SYSTEM	VALVE TYPE					
	BUTTERFLY	BALL	CHECK	GATE	BALANCING	LUB. PLUG
DOMESTIC WATER SERVICE 2" AND LARGER				D18		
DOMESTIC WATER (CW, HW, & HWR) 2" AND SMALLER		B11, B14	C11, C13		E11	
DOMESTIC WATER (CW, HW, & HWR) 2.5" AND LARGER		B14	C12, C14 C16			
INTERIOR NATURAL GAS 4" AND SMALLER		B17				
INTERIOR NATURAL GAS 4" AND LARGER						P11
EXTERIOR NATURAL GAS 3" AND SMALLER		B18				P11

TYPE	DESCRIPTION	TYPE	DESCRIPTION	TYPE	DESCRIPTION
D18	KENNEDY KS-FW 8068A, 200 PSI, NSF 61 EPOXY COATED CAST IRON BODY, RESILIENT WEDGE, O.S.& Y., FLANGED ENDS	**B18**	NIBCO T-585(OR 580)-70-UL, 600 PSI NON-SHOCK COLD, 2 PIECE, BRONZE BODY, SCREWED ENDS, FULL PORT, BRASS BALL, TFE SEAT, HANDLE. UL LISTED FOR GAS. ASME B16.33	**C14**	NIBCO F-910-LF 125 W.O.G., IN-LINE SPRING ACTUATED CENTER GUIDED SILENT CHECK, GLOBE STYLE, IRON BODY FOR INSTALLATION BETWEEN FLANGES, BRONZE SEAT AND DISC. NSF/ASME 61
B11	NIBCO T-585-80-LF, 150 W.S.P., TWO-PIECE BRONZE BODY, SCREWED ENDS, BRONZE BALL AND BRONZE STEM, TFE SEAT AND SEAL, HANDLE. NSF/ASME 61	**C11**	NIBCO T-413-Y-LF, 125 W.S.P., BRONZE BODY, SCREWED ENDS, RENEWABLE BRONZE SWING DISC WITH TFE SEAT RING. NSF 61	**C16**	WATTS SERIES LFWCV, 125 W.S.P. BRONZE BODY, SCREWED ENDS, BRONZE SWING DISC, NSF/ASME 61
B14	APOLLO 70LF-240, 150 WSP TWO-PIECE, LEAD-FREE BRONZE BODY, 316 STAINLESS STEEL BALL AND STEM, STANDARD PORT, TEFLON SEAT AND SEAL, HANDLE, NSF/ASME 61	**C12**	NIBCO T-938-33, 250 PSI WORKING WATER PRESSURE., DUCTILE IRON BODY, STAINLESS STEEL TRIM, FLANGED ENDS, RENEWABLE STAINLESS STEEL SWING DISC AND SEAT RING. NSF/ANSI 61-8	**E11**	BELL & GOSSETT CB-1LF 400 PSI, BRONZE BODY WITH BRASS BALL, SCREW CONNECTION, READOUT & DRAIN PORTS, TFE SEATS, CALIBRATED NAMEPLATE, HANDLE WITH MEMORY STOP, NSF/ASME 61
B17	NIBCO T-FP-600A, 600 PSI NON-SHOCK COLD., 2 PIECE, BRASS BODY, SCREWED ENDS, FULL PORT, BRASS BALL, TFE SEAT, HANDLE. UL LISTED FOR GAS. ASME B16.44	**C13**	NIBCO T-480-Y-LF, 125 W.S.P., IN-LINE SPRING ACTUATED CENTER GUIDED SILENT CHECK,BRONZE BODY, SCREWED ENDS, TFE DISC AND SEAT RING, NSF/ASME 61	**P11**	NORDSTROM NO. 143, 200 PSI, IRON BODY, ST. ST. STEM, FLANGED ENDS, WRENCH

BUILDING DRAIN SYSTEMS SCHEDULE STORM, SANITARY, & VENT

GENERAL NOTES:

QUALITY ASSURANCE
PIPING SHALL CONFORM TO OBC REQUIREMENTS.

PIPING SHALL COMPLY WITH ASME B31.9 "BUILDING SERVICES PIPING".

INSTALL CAST-IRON SOIL PIPING ACCORDING TO CISPI'S "CAST IRON SOIL PIPE AND FITTINGS HANDBOOK," CHAPTER IV, "INSTALLATION OF CAST IRON SOIL PIPE AND FITTINGS."

ON PIPING 5" AND LARGER PROVIDE BRACING AT EVERY BRANCH OPENING OR CHANGE IN DIRECTION AS REQUIRED BY CISPI'S "CAST IRON SOIL PIPE AND FITTINGS HANDBOOK," CHAPTER IV, "INSTALLATION OF CAST IRON SOIL PIPE AND FITTINGS."

INSTALL PVC SOIL AND WASTE DRAINAGE AND VENT PIPING ACCORDING TO ASTM D 2665.

PRODUCTS
PVC PIPING SHALL NOT BE USED IN SPACES USED AS PLENUMS.

EXECUTION
PIPE AND TUBING SHALL BE CUT AND FABRICATED TO FIELD MEASUREMENTS AND RUN PARALLEL TO NORMAL BUILDING LINES. PIPE INTERIOR SHALL BE CLEANED OF FOREIGN MATTER AND BURRS BEFORE ERECTION OF PIPE.

ANNULAR SPACE AROUND PIPING THRU ALL WALLS SHALL BE SEALED OFF WITH PERMANENT PLIABLE CAULKING OR APPROVED PATCHING SEALANT.

PROVIDE PIPING SLEEVES AT FLOORS, WALLS & ROOFS IN NEW CONSTRUCTION. EXISTING WALLS TO BE SAW CUT TO PASS NEW PIPING.

PIPING SHALL NOT BE RUN ABOVE ELECTRICAL SWITCHGEAR OR PANELBOARDS, NOR ABOVE THE ACCESS SPACE OF SUCH EQUIPMENT - NEC ARTICLE 384.

LAY BURIED BUILDING DRAINAGE PIPING BEGINNING AT LOW POINT OF EACH SYSTEM. INSTALL TRUE TO GRADES AND ALIGNMENT INDICATED, WITH UNBROKEN CONTINUITY OF INVERT.

SUPPORT PIPING FROM BUILDING STRUCTURE WITH RODS, ANGLES & CLAMPS ATTACHED TO STRUCTURE. HANG PIPING WITH CLEVIS HANGER OR ROLLER SUPPORTS. HANGERS SHALL BE INSTALLED ON CENTERS AS RECOMMENDED BY MANUFACTURER.

SLOPE DRAINAGE PIPING AT 1/4" PER FOOT (2%) FOR PIPING SMALLER THAN 3" AND 1/8" PER FOOT (1%) FOR PIPING 3" AND LARGER.

VENT PIPING SHALL BE PITCHED FOR DRAINAGE.

CLOSE OPEN ENDS OF PIPING DURING CONSTRUCTION.

COUPLINGS AND GASKETS SHALL BE INSTALLED IN ACCORDANCE WITH MANUFACTURER'S RECOMMENDATIONS.

MAKE CHANGES IN DIRECTION FOR SOIL AND WASTE DRAINAGE AND VENT PIPING USING APPROPRIATE BRANCHES, BENDS, AND LONG-SWEEP BENDS. SANITARY TEES AND SHORT-SWEEP 1/4 BENDS MAY BE USED ON VERTICAL STACKS IF CHANGE IN DIRECTION OF FLOW IS FROM HORIZONTAL TO VERTICAL.

DO NOT ENCLOSE, COVER, OR PUT PIPING INTO OPERATION UNTIL IT IS INSPECTED AND APPROVED BY AUTHORITIES HAVING JURISDICTION.

TESTING
PIPING SHALL BE TESTED IN ACCORDANCE WITH THE AUTHORITY HAVING JURISDICTION.

PIPING SYSTEM	TYPE
SANITARY PIPING BELOW FLOOR SLAB IN GRADE	P1
SANITARY & VENT PIPING ABOVE THE FLOOR	CI1, CI2
STORM DRAINAGE BELOW THE FLOOR IN SLAB	P1
STORM DRAINAGE ABOVE FLOOR	CI1, CI2
INDIRECT DRAINS/CONDENSATE DRAIN LINES 1" & SMALLER	C1, C5, C8

TYPE	DESCRIPTION	TYPE	DESCRIPTION
CI1	**NO-HUB CAST IRON (STD)** SERVICE WEIGHT ASTM A888 OR CISPI 301 SHIELDED COUPLINGS ASTM C1277 OR CISPI 310 RUBBER SLEEVE ASTM C564	**C1**	**SOLDERED COPPER** TYPE "L" HARD COPPER ASTM B88 WROUGHT COPPER OR CAST BRONZE FITTINGS 95-5 SOLDER
CI2	**HUB & SPIGOT CAST IRON** ASTM A74, SERVICE CLASS DWV FITTING RUBBER GASKET ASTM C564	**C5**	**PRESS-FIT COPPER** TYPE "L" HARD COPPER ASTM B88 COPPER OR BRONZE FITTINGS ASTM B16.18 OR B16.22 250 DEG. F. EPDM SEALS
P1	**PVC** SCHEDULE 40 PVC ASTM D2665 AND D2321 DWV FITTINGS, ASTM D3311 GLUED JOINTS	**C8**	**TYPE "K" SOFT COPPER** ASTM B88 WROUGHT COPPER OR CAST BRONZE FITTINGS 95-5 SOLDER

BUILDING SUPPLY SYSTEMS SCHEDULE WATER & GAS

GENERAL NOTES:

QUALITY ASSURANCE
PIPING SHALL CONFORM TO OBC REQUIREMENTS.

PIPING SHALL COMPLY WITH ASME B31.9 "BUILDING SERVICES PIPING".

ALL COMPONENTS OF DOMESTIC WATER SYSTEMS (CW, HW, & HWR) SHALL BE "LEAD FREE" IN ACCORDANCE WITH THE FEDERAL SAFE WATER ACT (S3874) DEFINITION AND CONFORM TO NSF 61.

PRODUCTS
DIELECTRIC CONNECTORS SHALL BE PROVIDED AT CONNECTIONS BETWEEN FERROUS & COPPER PIPING.

GAS PRESSURE REGULATORS SHALL BE CAST IRON SELF-OPERATING SPRING LOADED TYPE. VALVE 125 PSI. SPRING AND DIAPHRAGM CASINGS SHALL BE ALUMINUM. REGULATOR SHALL HAVE AN INTERNAL RELIEF VALVE ASSEMBLY, TAPPED VENT CONNECTION WITH REMOVABLE SCREEN ON THE SPRING CASING AND AN EXTERNAL PILOT OPERATOR TO AFFORD A 5% MAXIMUM DROOP. OVER-PRESSURE PROTECTION SHALL BE TEN TIMES THE INLET PRESSURE (OR HIGHER AS MAY BE REQUIRED BY THE GAS COMPANY). FISHER TYPE S102 OR S202 OR EQUAL BY SPRAGUE OR EQUIMETER.

UNIONS
COPPER TUBING - WROUGHT OR CAST COPPER, CLASS 150, SOLDERED ENDS
THREADED STEEL PIPE - MALLEABLE IRON W/GROUND SEAT, 300 LB SCREWED ENDS.

MECHANICALLY FORMED TEES AND COUPLINGS (T-DRILL) ARE NOT PERMITTED.

EXECUTION
PIPE AND TUBING SHALL BE CUT AND FABRICATED TO FIELD MEASUREMENTS AND RUN PARALLEL TO NORMAL BUILDING LINES. PIPE INTERIOR SHALL BE CLEANED OF FOREIGN MATTER AND BURRS BEFORE ERECTION OF PIPE.

ANNULAR SPACE AROUND PIPING THRU ALL WALLS SHALL BE SEALED OFF WITH PERMANENT PLIABLE CAULKING OR APPROVED PATCHING SEALANT.

PROVIDE PIPING SLEEVES AT FLOORS, WALLS & ROOFS IN NEW CONSTRUCTION. EXISTING WALLS TO BE SAW CUT TO PASS NEW PIPING.

PIPING SHALL NOT BE RUN ABOVE ELECTRICAL SWITCHGEAR OR PANELBOARDS, NOR ABOVE THE ACCESS SPACE OF SUCH EQUIPMENT - NEC ARTICLE 384.

PIPING SHALL BE PITCHED FOR DRAINAGE.

CLOSE OPEN ENDS OF PIPING DURING CONSTRUCTION.

MECHANICAL JOINT PIPING SYSTEM SHALL BE INSTALLED IN ACCORDANCE WITH MANUFACTURER'S RECOMMENDATIONS.

GAS PRESSURE REGULATORS SHALL BE INSTALLED IN ACCORDANCE WITH THE MANUFACTURER'S INSTRUCTIONS. PROVIDE VALVED GAUGE TAPS UPSTREAM AND DOWNSTREAM OF THE REGULATOR VENT PIPING SHALL BE EXTENDED INDIVIDUALLY FROM EACH REGULATOR AND GAS VENTING DEVICE TO OUTSIDE THE BUILDING IN AN APPROVED LOCATION.

SUPPORT PIPING FROM BUILDING STRUCTURE WITH RODS, ANGLES & CLAMPS ATTACHED TO STRUCTURE. HANG PIPING WITH CLEVIS HANGER OR ROLLER SUPPORTS. HANGERS SHALL BE INSTALLED ON CENTERS AS RECOMMENDED BY MANUFACTURER.

CLEAN INTERIOR WATER PIPING AFTER INSTALLATION BY FLUSHING WITH CLEAN POTABLE WATER TO CLEAR ALL INTERNAL DEBRIS.

ALL NEW AND EXISTING DOMESTIC WATER PIPING SHALL BE DISINFECTED IN CONFORMANCE WITH AWWA C651-86. DOMESTIC WATER PIPING SHALL BE SANITIZED PRIOR TO PUTTING SYSTEM IN OPERATION BY A COMPANY OR PERSONNEL REGULARLY ENGAGED IN THE PERFORMANCE OF THIS SERVICE.

EXTERIOR NATURAL GAS PIPING SHALL BE PAINTED WITH 2 COATED OF EXTERIOR GRADE PAINT FOR PROTECTION.

TESTING
DOMESTIC WATER PIPING - 125 PSI FOR MIN. 6 HOURS AT THE LOW POINT IN THE SYSTEM.

NATURAL GAS PIPING - 100 PSI COMPRESSED AIR FOR 6 HOURS.

PIPING SYSTEM	TYPE
DOMESTIC WATER SERVICE PIPING 3" & LARGER	D1
DOMESTIC HOT, COLD WATER	C1, C4, C5
DOMESTIC COLD WATER BELOW GRADE	C8, PX1
NATURAL GAS AT PRESSURES 5 PSI & LESS	S1, S2
NATURAL GAS AT PRESSURES MORE THAN 5 PSI	S1
MISCELLANEOUS UNDERGROUND NATURAL GAS (OUTSIDE OF BUILDING)	PE1

TYPE	DESCRIPTION	TYPE	DESCRIPTION
C1	**SOLDERED COPPER** TYPE "L" HARD COPPER ASTM B88 WROUGHT COPPER OR CAST BRONZE FITTINGS 95-5 SOLDER	**S1**	**WELDED BLACK STEEL** SCHEDULE 40, ASTM A53 TYPE E WROUGHT-STEEL WELDING FITTINGS: ASTM A 234/A 234M 150 LB. C.I. FITTINGS
C4	**GROOVED COPPER** TYPE "L" HARD COPPER ASTM B88 COPPER ASTM B75 UNS C12200 FITTINGS VICTAULIC STYLE 607 COUPLING	**S2**	**THREADED BLACK STEEL** SCHEDULE 40, ASTM A53 TYPE F 150 LB. C.I. FITTINGS
C5	**PRESS-FIT COPPER** TYPE "L" HARD COPPER ASTM B88 COPPER OR BRONZE FITTINGS ASTM B16.18 OR B16.22 250 DEG. F. EPDM SEALS	**PE1**	**POLYETHYLENE** PE 2306, 2406 TYPE II GRADE 3, PE 3406, 3408 TYPE III, ASTM D2513 HEAT FUSION JOINTS
C8	**TYPE "K" SOFT COPPER** ASTM B88 WROUGHT COPPER OR CAST BRONZE FITTINGS 95-5 SOLDER	**PX1**	**PEX TUBING** CROSSLINKED POLYETHYLENE TUBING, SDR 9, ASTM F877 METAL INSERT FITTINGS WITH COPPER OR STEEL CRIMP RING
D1	**DUCTILE IRON** ANSI A21.51 & AWWA CLASS 53 OR 51 250 LB. FITTINGS FLANGED FITTINGS		

GENERAL REQUIREMENTS

1. PROVIDE COMPLETE AND FUNCTIONAL PLUMBING SYSTEMS PER PLANS INCLUDING FURNISHING, INSTALLING, TESTING AND WARRANTY OF ALL WORK.
2. WORK SHALL BE IN ACCORDANCE WITH THE 2017 OHIO BUILDING AND OHIO PLUMBING CODES INCLUDING REFERENCED CODES AND STANDARDS, ALL FEDERAL AND LOCAL CODES AND ALL APPLICABLE LAWS, ORDINANCES AND REGULATIONS.
3. WORK SHALL BE PERFORMED USING BEST QUALITY INSTALLATION PRACTICE BY A QUALIFIED TRADE CONTRACTOR AND THEIR QUALIFIED SUBCONTRACTORS. ALL CONTRACTORS SHALL BE LICENSED AND BE BONDED FOR THE WORK.
4. ALL WORK SHALL BE PERFORMED IN ACCORDANCE WITH OSHA AND OWNER SAFETY STANDARDS AND PRACTICES. ALL ON SITE PERSONNEL SHALL BE SAFETY TRAINED AND OWNER CERTIFIED.
5. OBTAIN REQUIRED PERMITS RELATED TO THE WORK AND PAY ALL PERMIT AND INSPECTION FEES.
6. THE AUTHORITY HAVING JURISDICTION SHALL INSPECT AND APPROVE ALL WORK. PROVIDE A FINAL CERTIFICATE OF APPROVAL FROM THE AUTHORITY HAVING JURISDICTION AND PRESENT TO THE OWNER BEFORE REQUESTING FINAL PAYMENT AND RELEASE OF RETAINAGE.
7. PROTECT ALL FURNISHED MATERIAL AND EQUIPMENT FROM THEFT AND DETERIORATION OR CONTAMINATION DUE TO WEATHER OR CONSTRUCTION ACTIVITIES.
8. PROTECT OWNER'S PROPERTY AND PROPERTY OF OTHER CONTRACTORS.
9. REMOVE ALL CONSTRUCTION DEBRIS FROM SITE. RECYCLE DEBRIS WHERE POSSIBLE. DISPOSE OF ALL HAZARDOUS MATERIAL IN ACCORDANCE WITH ENVIRONMENTAL LAWS.
10. PROVIDE ALL CUTTING AND PATCHING REQUIRED TO INSTALL MATERIAL AND EQUIPMENT.
11. PROVIDE APPROPRIATE FIRESTOPPING SYSTEM FOR ANNULAR SPACE OPENINGS AROUND PIPE PENETRATIONS THROUGH FIRE RESISTANCE RATED CONSTRUCTION. ANNULAR SPACE OPENINGS AT PIPE PENETRATIONS IN NON RATED CONSTRUCTION TO BE CLOSED AIR AND WATER TIGHT.
12. MATERIALS AND EQUIPMENT SHALL BE ONE OF THE BRAND OR MANUFACTURERS LISTED OR AN APPROVED EQUAL.
13. ELECTRONIC SHOP DRAWINGS SHALL BE PROVIDED IN .PDF FORMAT FOR THE ENGINEER'S APPROVAL FOR ALL MATERIALS AND EQUIPMENT. **SHOP DRAWINGS SHALL BE SPECIFICALLY EDITED TO ELIMINATE SUPERFLUOUS INFORMATION** AND SHALL CLEARLY SHOW SPECIFICS FOR THE MATERIAL AND EQUIPMENT PROVIDED.
14. COORDINATE INSTALLATION OF ACTUAL EQUIPMENT AND SYSTEMS PROVIDED WITH OTHER TRADES AND NEW OR EXISTING CONDITIONS.
15. INSTALL ALL MATERIALS AND EQUIPMENT IN ACCORDANCE WITH MANUFACTURER'S RECOMMENDATIONS AND REQUIREMENTS.
16. INSTALL ALL MATERIAL AND EQUIPMENT TO PROVIDE REQUIRED CLEARANCES TO MEET CODE REQUIREMENTS, MANUFACTURER'S RECOMMENDATIONS AND MAINTENANCE SERVICE.
17. ALL WORK AREAS SHALL BE CLEANED TO MATCH ORIGINAL CONDITION.
18. MAINTAIN RECORD DRAWINGS AND PROVIDE TO THE OWNER OR HIS AGENT.
19. PROVIDE TWO (2) BOUND, PAPER COPIES OF ALL OPERATING AND MAINTENANCE MANUALS. PROVIDE AN ELECTRONIC COPY OF THE OPERATING AND MAINTENANCE MANUAL.
20. PROVIDE WARRANTY FOR ALL WORKMANSHIP, EQUIPMENT AND MATERIAL. WARRANTY SHALL BE 1 YEAR FOR PARTS AND LABOR, PROVIDE EXTENDED WARRANTY PERIOD FOR PARTS AND/OR LABOR AS IDENTIFIED OR AS STANDARD FOR CERTAIN ITEMS OF EQUIPMENT.

NAUMAN & ZELINSKI LLC.
204 S. Ludlow Street Suite 400 Dayton, Ohio 45402
Phone: (937) 223-3821 – Fax: (937) 223-3949

App Architecture
creative focused design
615 Woodside Drive, Englewood, Ohio 45322
T 937.836.8898 F 937.832.3696
www.app-arch.com

STATE OF OHIO
JEFFREY D. ZELINSKI
83822
REGISTERED
PROFESSIONAL ENGINEER

MIAMI COUNTY ONE STOP CENTER
BOARD OF COMMISSIONERS FOR MIAMI COUNTY, OHIO
BARNHART ROAD, TROY, OHIO 45373

ISSUE

NO.	DATE	DESCRIPTION
1	04/08/2022	FOR CONSTRUCTION

DATE	04/08/22
JOB NO.	3923.00
DRAWN	DG
CHECKED	JDZ

COPYRIGHT © 2022 - App Architecture, Inc.

TITLE
SPECIFICATIONS

SHEET NO.
P0.2

4/8/2022 1:21:16 PM

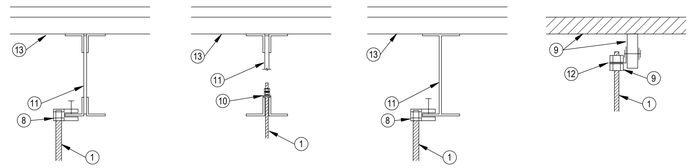

STEEL JOIST CONSTRUCTION PIPES 2.0" & SMALLER

STEEL JOIST CONSTRUCTION PIPES 2.5" & LARGER

STEEL BEAM CONSTRUCTION ALL PIPE SIZES

WOOD CONSTRUCTION

1. GALVANIZED THREADED ROD. ADJUST NUTS & RODS FOR PROPER ELEVATION.
2. STEEL CLEVIS PIPE HANGER. EQUAL TO ANVIL FIG. 260.
3. PIPE INSULATION.
4. PIPE.
5. 12" LONG, 18 GA. GALVANIZED INSULATION SHIELD. EQUAL TO ANVIL FIG. 168. CONTINUOUS INSULATION.
6. 18" LONG INSULATED PIPE SADDLES. BUCKAROOS TRU-BALANCE 3300E OR EQUAL. PROVIDE WITH 3.75 LB. DENSITY PNENOLIC FOAM INSULATION WITH VAPOR RETARDER JACKET & BOTTOM GALVANIZED METAL INSULATION SHIELD. SADDLES TO MEET 25/50 FLAME/SMOKE RATING.
7. PIPE INSULATION AND SADDLE INSULATION SHALL BE TIGHTLY ABUTTED TOGETHER. SEAL WITH 4" WIDE VAPOR RETARDER TAPE WITH FACTORY APPLIED JACKET WITH ACRYLIC ADHESIVE TO ASSURE VAPORTIGHT SEAL.
8. THREADED ROD BEAM CLAMP.
9. WOOD DECK & BEAM.
10. RETAINING NUTS & WASHERS.
11. STEEL JOIST OR BEAM.
12. 90 DEGREE SIDE BEAM BRACKET WITH THREADED ROD INTO WOOD.
13. METAL DECKING. DIRECT ATTACHMENT TO DECKING IS PROHIBITED. PROVIDE SUPPLEMENTAL STEEL ANGLES OR UNISTRUT WHERE REQUIRED FOR PROPER HANGER SPACING OR IN LIEU OF ATTACHMENTS SHOWN.

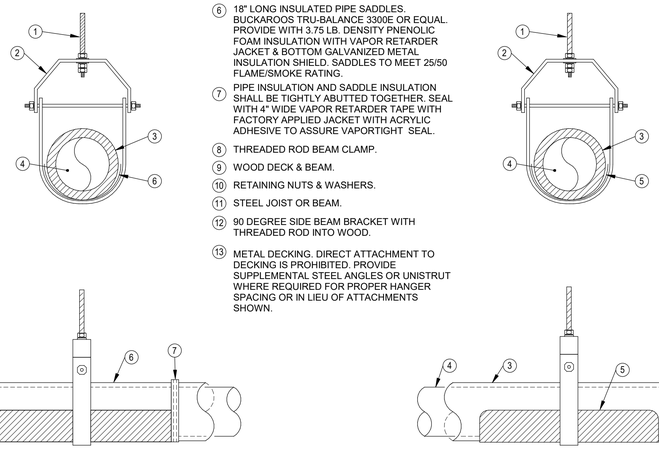

PIPING 2.5" & LARGER

PIPING 2.0" & SMALLER

3 PIPE HANGERS
N.T.S.

PIPE INSULATION SCHEDULE - PLUMBING

GENERAL NOTES:

QUALITY ASSURANCE
FIRE, SMOKE RATINGS: FLAME SPREAD RATING OF 25 OR LESS, SMOKE DEVELOPED RATING OF 50 OR LESS.

THICKNESSES SHALL CONFORM TO ASHRAE 90.1-2010 MINIMUMS.

GREEN GUARD INDOOR AIR QUALITY CERTIFIED.

EXECUTION
INSTALLATION PER MANUFACTURER'S RECOMMENDATIONS.

COLD SERVICE PIPE INSULATION AND VAPOR BARRIER/JACKET TO BE CONTINUOUS THRU FLOOR AND WALL SLEEVES AT ALL PIPE DEVICES AND PUMP CASINGS.

INSULATION AND VAPOR BARRIER TO BE CONTINUOUS AT PIPE HANGERS AND SUPPORTS ON HORIZONTAL PIPING. PROVIDE HARDWOOD INSERT SUPPORT FOR PIPES 2.5" AND LARGER.

VERTICAL PIPE SUPPORTS SHALL ATTACH DIRECTLY TO PIPE. INSULATE SUPPORT AND OTHER SURFACES WITH FLEXIBLE CLOSED CELL INSULATION, SAME THICKNESS AS SYSTEM INSULATION ON COLD SERVICE PIPES TO PREVENT CONDENSATION.

INSULATION MAY BE OMITTED ON HOT WATER VALVES AND DEVICES 2" AND SMALLER PIPE SIZE.

PRIMARY AND SECONDARY ROOF DRAIN SUMPS SHALL BE INSULATED WITH 1" THICK INSULATION.

THE FIRST 10 FEET OF SECONDARY STORM PIPING AFTER THE DRAIN SHALL BE INSULATED.

ABOVE GRADE SANITARY DRAINAGE RECEIVING CONDENSATE SHALL BE INSULATED AS INDICATED BELOW FOR CONDENSATE DRAINAGE. WHERE THE DRAIN SUMP IS EXPOSED ON THE FLOOR BELOW, IT TOO SHALL BE INSULATED WITH 1" INSULATION.

SYSTEM & SIZE	INSULATION THICKNESS	TYPE	LOCATION
DOMESTIC COLD WATER 1.5" & SMALLER	0.5"	F1, P1	**INTERIOR**
DOMESTIC COLD WATER 2" & LARGER	1"	F1, P1	**INTERIOR**
DOMESTIC HOT WATER, TEMPERED WATER, & HOT AFTER RETURN 1.25" AND SMALLER	1"	F1, P1	**INTERIOR**
INTERIOR HORIZONTAL STORM DRAINAGE	1"	F1, P1	**INTERIOR**
CONDENSATE DRAINAGE	1"	F1, P1	**INTERIOR**

TYPE	BASIS OF DESIGN	APPROVED EQUALS	DESCRIPTION
F1	OWENS-CORNING SSL1-ASJ	KNAUF 1000° PIPE, JOHNS MANVILLE MICRO-LOK HP	* INORGANIC GLASS FIBER WITH RESIN BONDING. * K=0.24 @ 100 DEG. F. * 3.5 - 5.5 PCF. * PREFORMED TUBULAR. * WHITE FSRK JACKET. * LONGITUDINAL LAP WITH SELF-SEALING ADHESIVE. * ELBOWS, TEES, VALVES, CAPS, ETC., WHITE ONE PIECE, PREMOLDED 25/50 0.20" PVC FITTING COVERS WITH HIGH DENSITY FIBERGLASS INSULATION INSERTS SAME THICKNESS, K=0.26 EQUAL TO ZESTON OR PROTO.
P1	AEROFLEX - AEROCEL EPDM	RUBATEX	* PREFORMED, FLEXIBLE CLOSED CELL EPDM, TUBULAR INSULATION, OR SHEET INSULATION. * K=0.25 @ 75 DEG. F. * CLEAN PIPE SURFACE WITH DENATURED ALCOHOL PRIOR TO INSULATING.

PIPE HANGER SCHEDULE - PLUMBING

GENERAL NOTES FOR PIPE HANGERS:

DESIGN SUPPORTS FOR MULTIPLE PIPES CAPABLE OF SUPPORTING COMBINED WEIGHT OF SUPPORTED SYSTEMS, SYSTEM CONTENTS, AND TEST WATER.

WELDING: QUALIFY PROCEDURES AND PERSONNEL ACCORDING TO ASME BOILER AND PRESSURE VESSEL CODE: SECTION IX.

ATTACHMENT OF PIPE HANGER RODS TO THE STRUCTURE SHALL BE WITH:
1. PRE-SET CONCRETE INSERTS.
2. AFTER-SET STEEL EXPANSION TYPE CONCRETE INSERTS.
3. BEAM CLAMPS FOR STEEL CONSTRUCTION EQUAL TO ANVIL FIG. 92, 93, OR 94. UTILIZE SWIVEL TYPE IN SLOPED STEEL CONSTRUCTION TO PROVIDE VERTICAL SUPPORT OF PIPE WITHOUT BENDING HANGER RODS.
4. SIDE BEAM BRACKET FOR WOOD CONSTRUCTION EQUAL TO ANVIL FIG. 206.
5. CHANNEL SUPPORT SYSTEM EQUAL TO UNISTRUT OR HILTI.

ATTACHMENT TO MANUFACTURED TRUSSES AND OTHER ENGINEERED STRUCTURAL MEMBERS AND SUPPORTS SHALL BE DONE IN ACCORDANCE WITH THE STRUCTURAL MANUFACTURER'S RECOMMENDATIONS. REFER TO THE ARCHITECTURAL AND STRUCTURAL DRAWINGS FOR TYPE OF ENGINEERED STRUCTURAL SYSTEMS BEING USED. CONNECTIONS TO THESE STRUCTURAL MEMBERS SHALL BE MADE WITH CONNECTION DEVICES AND METHODS APPROVED BY THE STRUCTURAL MANUFACTURER. PROVIDE ADDITIONAL SUPPORTS WITH SUPPLEMENTAL STEEL SHAPES WHEN SPACING BETWEEN STRUCTURAL MEMBERS EXCEEDS SPECIFIED DISTANCES.

ADJUST PIPE HANGERS TO PROPER ELEVATION AND SET HANGER RODS IN A VERTICAL POSITION BEFORE PIPE INSULATION IS INSTALLED.

THE FIRST TWO HANGERS ON PIPING CONNECTING TO MOTOR DRIVEN EQUIPMENT SHALL BE FITTED WITH A STEEL SPRING AND NEOPRENE VIBRATION ISOLATION SECTION SIMILAR TO MASON INDUSTRIES, NO. 30N.

TRAPEZE HANGERS FOR NUMEROUS PIPES RUN IN PARALLEL MAY BE UTILIZED. HORIZONTAL SUPPORT MEMBERS SHALL BE UNISTRUT TYPE SECTION WITH PIPE ROLLERS (TO ALLOW FOR EXPANSION TRAVEL) AND SPRING AND NUT CONNECTORS, SUSPENDED WITH HANGER RODS AND ATTACHMENTS SIMILAR TO INDIVIDUAL PIPE HANGER SUSPENSION.

SHORTENED EXTENDED LEGS OF PIPE RISER CLAMPS AS NEEDED TO MAINTAIN CONCEALMENT OF THE CLAMP WITHIN THE PIPE CHASE. INSURE THAT ADEQUATE SUPPORT IS STILL MAINTAINED.

HANGER ASSEMBLIES EXPOSED ON COMPLETION OF THE PROJECT SHALL BE PAINTED BEFORE INSTALLATION.

PIPE SUPPORTS FOR PIPE RUNNING ACROSS THE ROOF SHALL BE INSTALLED IN ACCORDANCE WITH THE MANUFACTURER'S INSTRUCTIONS AND AS DETAILED. INSTALL PROTECTIVE SLIP SHEETS OF ROOFING MEMBRANE UNDER THE BASES TO SATISFY REQUIREMENTS OF BOTH THE ROOFING MANUFACTURER AND THE SUPPORT SYSTEM MANUFACTURER.

IN PIPING SYSTEMS WITH MECHANICAL JOINT COUPLINGS, PIPE HANGERS SHALL BE PROVIDED ON HORIZONTAL PIPING AT NORMAL SPECIFIED INTERVALS AND, IN ADDITION, SO THAT NO PIPE SHALL BE LEFT UNSUPPORTED BETWEEN ANY TWO COUPLINGS NOR LEFT UNSUPPORTED WHENEVER A CHANGE IN DIRECTION TAKES PLACE. VERTICAL PIPING SHALL BE SUPPORTED AT NORMAL SPECIFIED INTERVALS OR EVERY OTHER PIPE LENGTH, WHICH EVER IS MORE FREQUENT. THE BASE OF THE RISER OR BASE FITTING SHALL BE SUPPORTED.

SYSTEM & SIZE	ORIENTATION & SIZE	SPACING
STEEL PIPING	VERTICAL	AT BASE AND 15 FT MAXIMUM
	HORIZONTAL 2" & SMALLER	8 FT.
	HORIZONTAL 2.5" - 6"	10 FT.
CAST IRON	VERTICAL	AT BASE AND 15 FT MAXIMUM
	HORIZONTAL	AT 10 FT. INTERVALS. SUPPORT EACH LENGTH OF PIPE NOT MORE THAN 18" FROM THE JOINT. SUPPORT TERMINAL ENDS OF HORIZONTAL RUNS AND BRANCHES AND EACH CHANGE IN DIRECTION. 5" AND LARGER PROVIDE BRACING TO PREVENT HORIZONTAL MOVEMENT IN ACCORDANCE WITH CISPI "SOIL PIPE AND FITTINGS HANDBOOK"
COPPER TUBING	VERTICAL	AT BASE AND 15 FT MAXIMUM
	HORIZONTAL 1.25" & SMALLER	6 FT.
	HORIZONTAL 1.5" - 2"	8 FT.

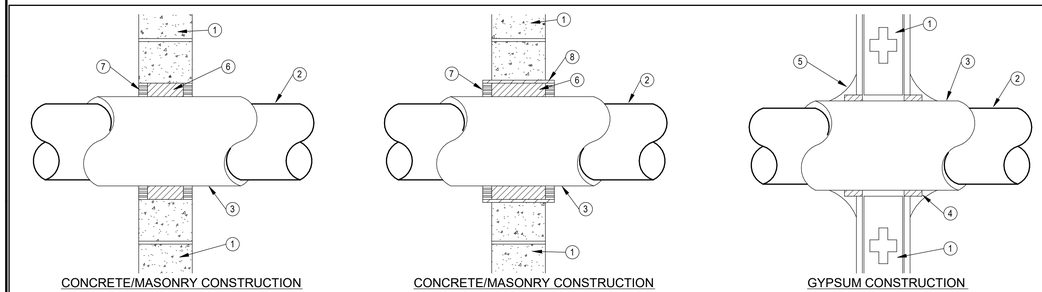

CONCRETE/MASONRY CONSTRUCTION
1/2" - 1.5" PIPES

CONCRETE/MASONRY CONSTRUCTION
2" AND LARGER PIPES

GYPSUM CONSTRUCTION
ALL PIPE SIZES

FIRESTOPPING MATERIALS/INSTALLATION

- MANUFACTURERS: 3M FIRE PROTECTION PRODUCTS HILTI FIRESTOP SYSTEMS
- FIRESTOPPING MATERIAL INSTALLATION SHALL BE PER THE MANUFACTURERS DETAILED INSTALLATION DIAGRAMS AND INSTRUCTIONS.
- F-RATING OF PENETRATION SHALL BE NO LESS THAN THE FIRE RATING OF THE WALL.
- SUBMITTAL SHALL INCLUDE PRODUCT DATA AND DETAILED INSTALLATION SYSTEM DIAGRAMS.

1. RATED WALL ASSEMBLY.
2. METALLIC PIPE OR TUBING.
3. PIPE INSULATION, CONTINUOUS THROUGH WALL OPENING, SEE SCHEDULE FOR THICKNESS.
4. APPROVED FIRESTOPPING VOID/CAVITY MATERIAL.
5. APPROVDED FIRESTOPPING CAULK OR SEALANT.
6. PACKING MATERIAL, MINERAL WOOL BATT INSULATION.
7. APPROVED FIRESTOPPING CAULK OR SEALANT FLUSH WITH SURFACE OF WALL OR EDGE OF SLEEVE.
8. SCHEDULE 40 STEEL PIPE SLEEVE CAST OR GROUTED INTO WALL ASSEMBLY. ENDS FLUSH OR MAX. 2" BEYOND WALL SURFACE.

2 PIPE PENETRATIONS THRU FIRE RATED WALL
N.T.S.

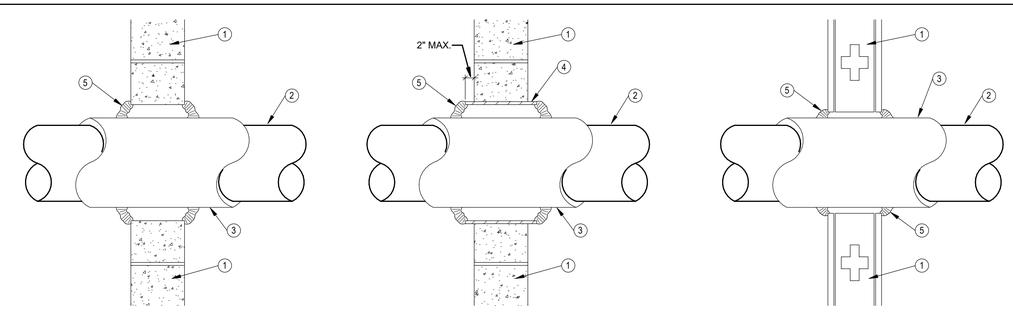

CONCRETE/MASONRY CONSTRUCTION
1/2" - 1.5" PIPES

CONCRETE/MASONRY CONSTRUCTION
2" AND LARGER PIPES

GYPSUM CONSTRUCTION
ALL PIPE SIZES

1. FULL HEIGHT INTERIOR WALL.
2. PIPE OR TUBING.
3. PIPE INSULATION, CONTINUOUS THROUGH WALL OPENING, SEE SCHEDULE FOR THICKNESS.
4. SCHEDULE 40 STEEL PIPE SLEEVE CAST OR GROUTED INTO WALL ASSEMBLY. ENDS FLUSH OR MAX. 2" BEYOND WALL SURFACE.
5. CAULK TO FILL VOID AT WALL/SLEEVE OPENING.

1 PIPE PENETRATIONS THRU NON-RATED WALL
N.T.S.

NAUMAN & ZELINSKI LLC.
204 S. Ludlow Street Suite 400 Dayton, Ohio 45402
Phone: (937) 223-3821 • Fax: (937) 223-3848

App Architecture
creative focused design
615 Woodside Drive, Englewood, Ohio 45322
T 937.836.8898 F 937.832.3696
www.app-arch.com

STATE OF OHIO
JEFFREY D. ZELINSKI
63822
REGISTERED
PROFESSIONAL ENGINEER

MIAMI COUNTY ONE STOP CENTER
BOARD OF COMMISSIONERS FOR MIAMI COUNTY, OHIO
BARNHART ROAD, TROY, OHIO 45373

ISSUE

NO.	DATE	DESCRIPTION
1	04/08/2022	FOR CONSTRUCTION

DATE	04/08/22
JOB NO.	3923.00
DRAWN	DG
CHECKED	JDZ

COPYRIGHT © 2022 - App Architecture, Inc.

TITLE
SPECIFICATIONS AND PIPING DETAILS

SHEET NO.
P0.3

4/8/2022 12:17 PM

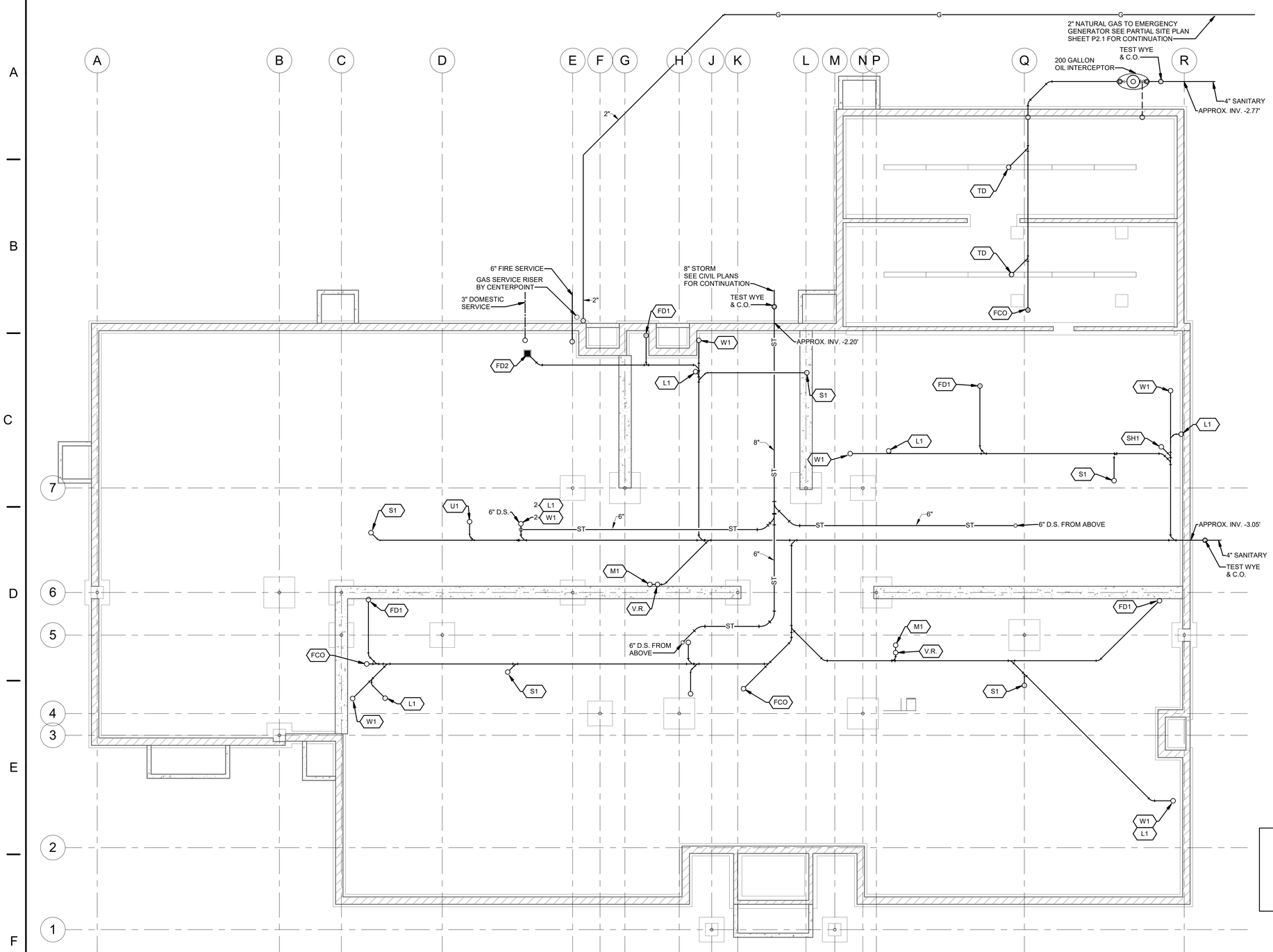

UNDER FLOOR PLUMBING PLAN

0 4 8 16 24 32 40

SCALE: 1/8"=1'-0"

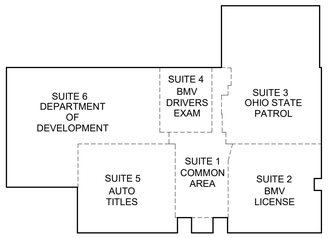

SUITE KEY PLAN

NAUMAN & ZELINSKI LLC.
204 S. Ludlow Street Suite 400 Dayton, Ohio 45402
Phone: (937) 223-3821 - Fax: (937) 223-3849

App Architecture
creative focused design
615 Woodside Drive, Englewood, Ohio 45322
T 937.836.8898 F 937.832.3696
www.app-arch.com

STATE OF OHIO
JEFFREY D. ZELINSKI
63822
REGISTERED
PROFESSIONAL ENGINEER

MIAMI COUNTY ONE STOP CENTER
BOARD OF COMMISSIONERS FOR MIAMI COUNTY, OHIO
BARNHART ROAD, TROY, OHIO 45373

ISSUE

NO.	DATE	DESCRIPTION
1	04/08/2022	FOR CONSTRUCTION

DATE	04/08/22
JOB NO.	3923.00
DRAWN	DG
CHECKED	JDZ

COPYRIGHT © 2022 - App Architecture, Inc.

TITLE
UNDERFLOOR PIPING PLAN

SHEET NO.
P1.0

4/8/2022 1:21:18 PM

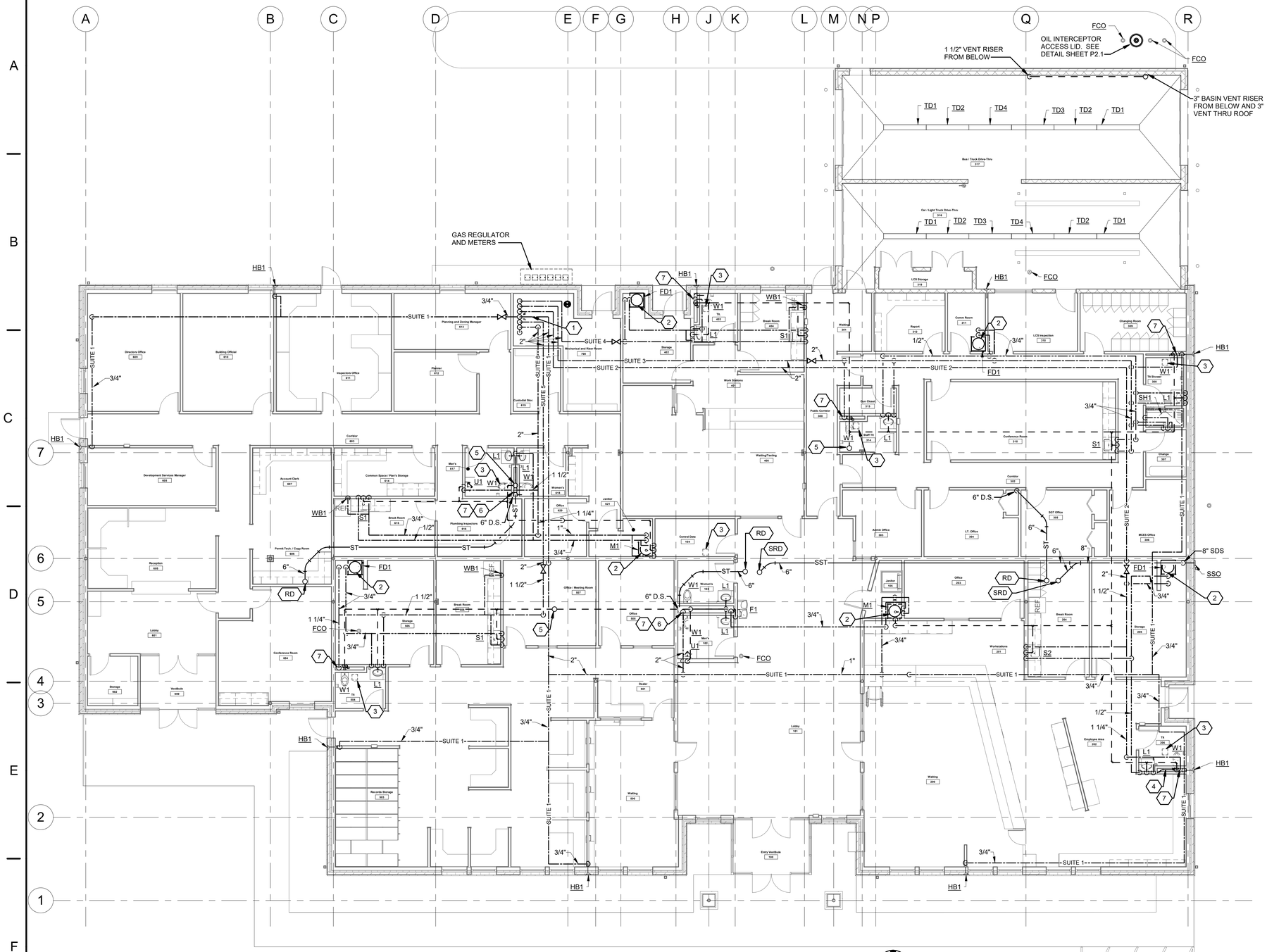

FIRST FLOOR PLAN

0 4 8 16 24 32 40

SCALE: 1/8"=1'-0"

CONSTRUCTION NOTES

1. DOMESTIC WATER SERVICE. SEE DETAIL SHEET P3.1
2. ELECTRIC WATER HEATER ON SHELF. SEE DETAIL SHEET P2.1.
3. TRANSFORMER FOR FLUSH VALVES. SLOAN # EL-451. TURN TRANSFORMER OVER TO E.C. WHO WILL MOUNT AND POWER UNIT. P.C. SHALL PROVIDE ALL LOW VOLTAGE WIRING FROM TRANSFORMER TO FLUSH VALVES. A MAXIMUM OF 10 FLUSH VALVES ARE ALLOWED ON EACH TRANSFORMER. FOLLOW MANUFACTURER'S RECOMMENDATIONS.
4. SANITARY PIPING NEAR TOP OF FLOOR.
5. UP TO VENT THRU ROOF. SEE DETAIL SHEET P2.1.
6. DROP 2" COLD WATER IN CHASE AND SERVE EACH FIXTURE INDIVIDUALLY.
7. PROVIDE WATER HAMMER ARRESTOR AT TOP OF DROP.

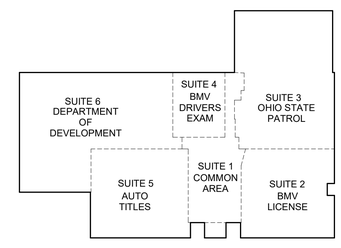

SUITE KEY PLAN

NAUMAN & ZELINSKI LLC.
204 S. Ludlow Street Suite 400 Dayton, Ohio 45402
Phone: (937) 223-3821 • Fax: (937) 223-3848

App Architecture
creative focused design
615 Woodside Drive, Englewood, Ohio 45322
T 937.836.8898 F 937.832.3696
www.app-arch.com

STATE OF OHIO
JEFFREY D. ZELINSKI
63822
REGISTERED
PROFESSIONAL ENGINEER

MIAMI COUNTY ONE STOP CENTER
BOARD OF COMMISSIONERS FOR MIAMI COUNTY, OHIO
BARNHART ROAD, TROY, OHIO 45373

ISSUE

NO.	DATE	DESCRIPTION
1	04/08/2022	FOR CONSTRUCTION

DATE	04/08/22
JOB NO.	3923.00
DRAWN	DG
CHECKED	JDZ

COPYRIGHT © 2022 - App Architecture, Inc.

TITLE
FIRST FLOOR PLAN

SHEET NO.
P1.1

4/8/2022 1:21:23 PM

CONSTRUCTION NOTES

1. PROPOSED GAS SERVICE. SEE DETAIL SHEET P2.1.
2. 1 1/2" TO EMERGENCY GENERATOR DOWN INTO GRADE SEE P1.0 UNDERGOUND PIPING PLAN AND PARTIAL SITE PLAN SHEET P2.1 FOR CONTINUATION.
3. EXTEND PIPING FROM SUITE METERS INTO BUILDING LOW AND EXTEND UP KEEPING TIGHT TO WALL.

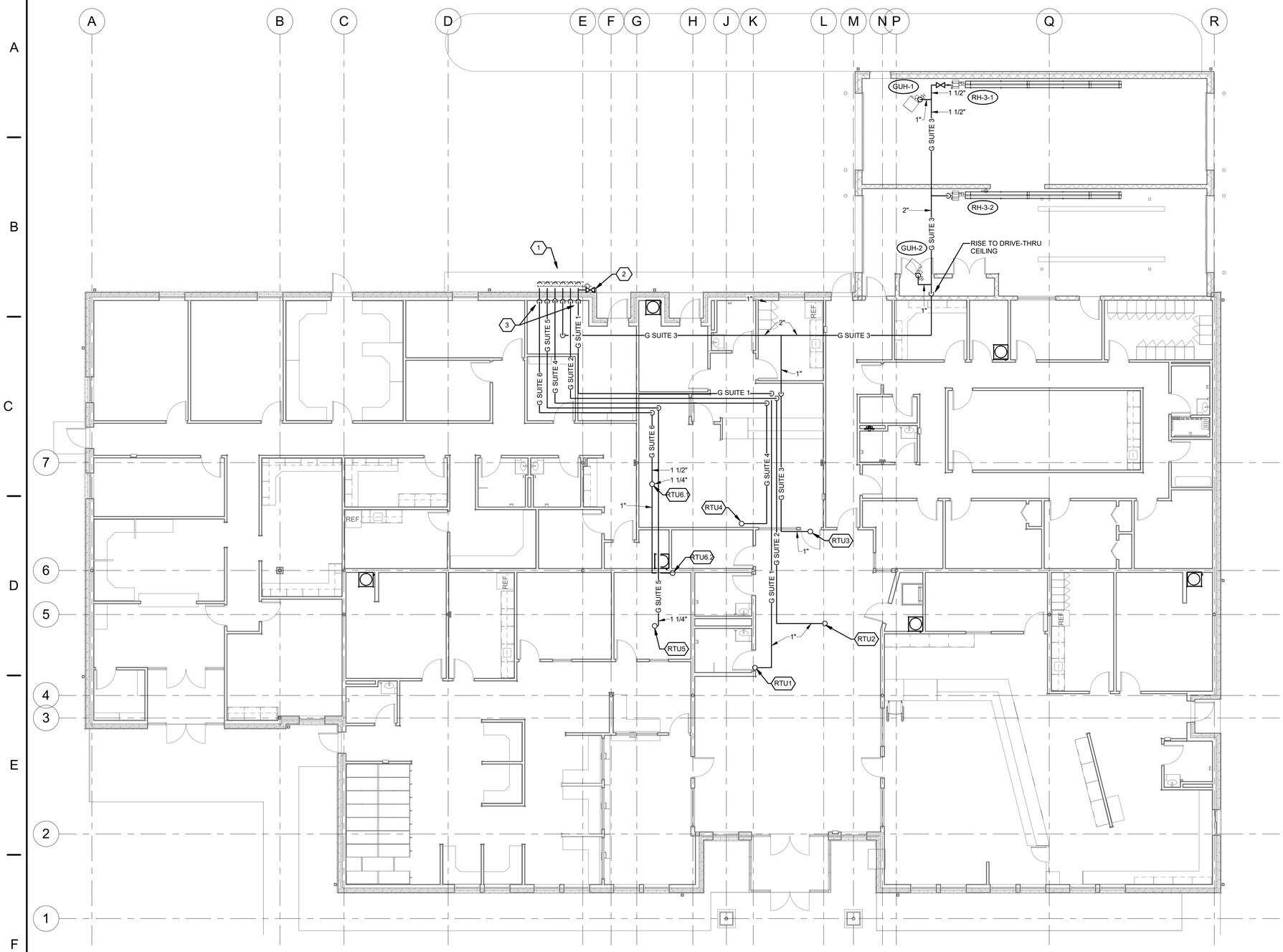

FIRST FLOOR PLAN - NATURAL GAS

0 4 8 16 24 32 40

SCALE: 1/8"=1'-0"

N

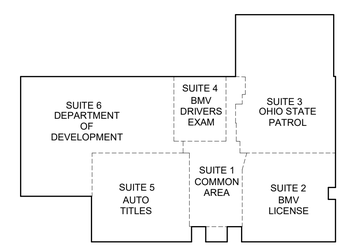

SUITE KEY PLAN

NAUMAN & ZELINSKI LLC.
204 S. Ludlow Street Suite 400 Dayton, Ohio 45402
Phone: (937) 223-3821 • Fax: (937) 223-3849

App Architecture
creative focused design
615 Woodside Drive, Englewood, Ohio 45322
T 937.836.8898 F 937.832.3696
www.app-arch.com

STATE OF OHIO
JEFFREY D. ZELINSKI
63822
REGISTERED
PROFESSIONAL ENGINEER

MIAMI COUNTY ONE STOP CENTER
BOARD OF COMMISSIONERS FOR MIAMI COUNTY, OHIO
BARNHART ROAD, TROY, OHIO 45373

ISSUE

NO.	DATE	DESCRIPTION
1	04/08/2022	FOR CONSTRUCTION

DATE	04/08/22
JOB NO.	3923.00
DRAWN	DG
CHECKED	JDZ

COPYRIGHT © 2022 - App Architecture, Inc.

TITLE
FIRST FLOOR PLAN NATURAL GAS

SHEET NO.
P1.1G

4/8/2022 1:21:23 PM

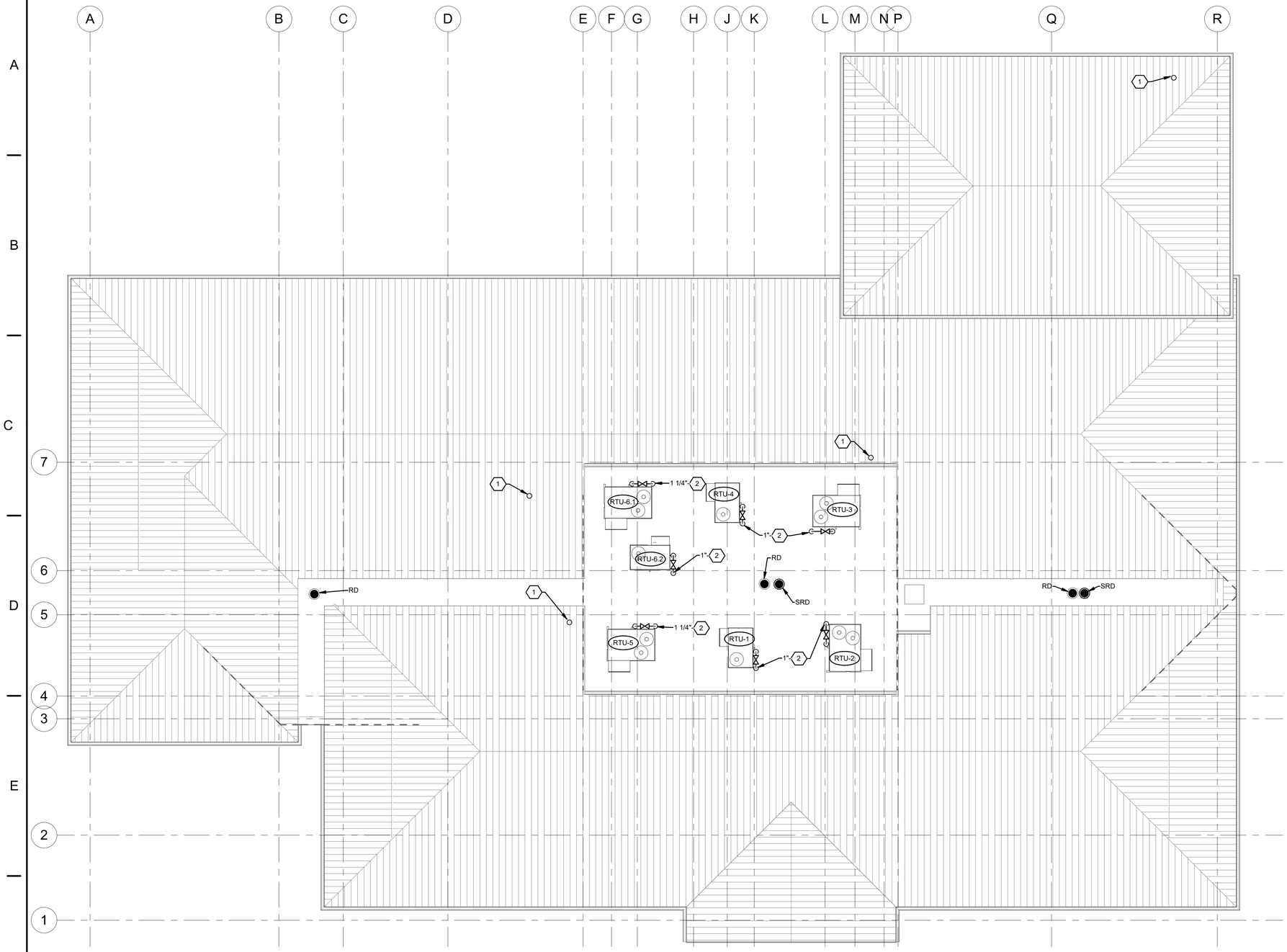

ROOF PLAN

SCALE: 1/8"=1'-0"

CONSTRUCTION NOTES

1. 3" VENT THRU ROOF. SEE DETAIL SHEET P2.1.
2. NATURAL GAS PIPING FROM BELOW. OFFSET AND CONNECT TO ROOF TOP UNIT . PROVIDE SHUT-OFF VALVE, FULL SIZE DIRT LEG AND UNION(AT CONNECTION TO UNIT) SEE GAS CONNECTION DETAIL SHEET P2.1.

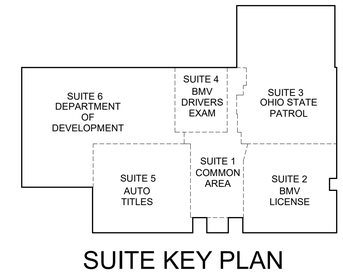

SUITE KEY PLAN

NAUMAN & ZELINSKI LLC.
204 S. Ludlow Street Suite 400 Dayton, Ohio 45402
Phone: (937) 223-3821 • Fax: (937) 223-3849

App Architecture
creative focused design
615 Woodside Drive, Englewood, Ohio 45322
T 937.836.8898 F 937.832.3696
www.app-arch.com

STATE OF OHIO
JEFFREY D. ZELINSKI
63822
REGISTERED
PROFESSIONAL ENGINEER

MIAMI COUNTY ONE STOP CENTER
BOARD OF COMMISSIONERS FOR MIAMI COUNTY, OHIO
BARNHART ROAD, TROY, OHIO 45373

ISSUE

NO.	DATE	DESCRIPTION
1	04/08/2022	FOR CONSTRUCTION

DATE	04/08/22
JOB NO.	3923.00
DRAWN	DG
CHECKED	JDZ

COPYRIGHT © 2022 - App Architecture, Inc.

TITLE
ROOF PLAN

SHEET NO.
P1.2

4/8/2022 1:21:26 PM

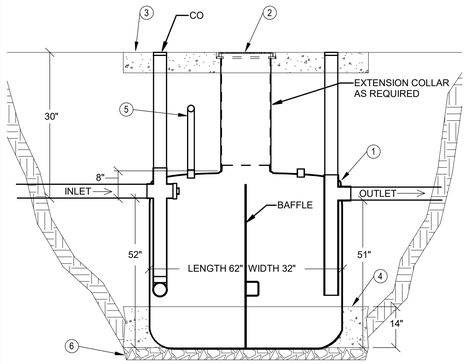

1. 200 GALLON FIBERGLASS OIL INTERCEPTOR ZURN PROCEPTOR #OMC 200 OR APPROVED EQUAL.
2. 24"Ø FRAME AND COVER SECURED IN CONCRETE.
3. REINFORCED CONCRETE RELIEVING SLAB AS RECOMMENDED BY MANUFACTURER.
4. ANTI-BUOYANCY SLAB 3000 PSI CONCRETE READY MIX POUR 12" HORIZONTALLY ALL AROUND BASE OF UNIT TO HEIGHT OF BUOYANCY SLAB (86" LENGTH X 56" WIDTH X HBS)
5. 2"Ø. BASIN VENT.
6. MIN. 6" PEA GRAVEL (OR APPROVED BACKFILL COMPACTED TO 98% SPD)

3 OIL INTERCEPTOR
N.T.S.

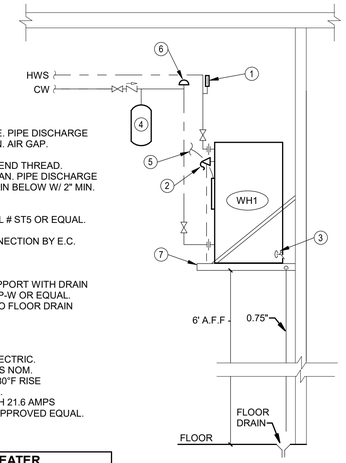

1. THERMOMETER (TYPICAL)
2. T&P SAFETY RELIEF VALVE. PIPE DISCHARGE TO FLOOR DRAIN W/ 2" MIN. AIR GAP.
3. DRAIN VALVE WITH HOSE-END THREAD. DISCHARGE INTO DRAIN PAN. PIPE DISCHARGE FROM PAN TO FLOOR DRAIN BELOW W/ 2" MIN. AIR GAP.
4. EXPANSION TANK. AMTROL # ST5 OR EQUAL.
5. ELECTRICAL POWER CONNECTION BY E.C.
6. VACUUM RELIEF VALVE.
7. WATER HEATER WALL SUPPORT WITH DRAIN PAN. HOLDRITE # 50-SWHP-W OR EQUAL. PIPE 1" PVC DISCHARGE TO FLOOR DRAIN

WH1 WATER HEATER #1, ELECTRIC.
STORAGE - 30 GALLONS NOM.
CAPACITY - 23 GPH @ 80°F RISE
ELEMENT - ONE 4.5 KW.
ELECTRICAL - 208V/ 1PH 21.6 AMPS
RHEEM # EGSP30 OR APPROVED EQUAL.

2 DOMESTIC WATER HEATER
N.T.S.

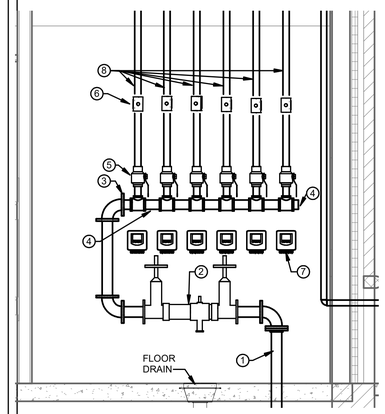

1. 3" DOMESTIC WATER SERVICE FROM METER PIT BY SITE UTILITY CONTRACTOR SEE CIVIL UTILITY DRAWINGS.
2. 3" REDUCED PRESSURE BACKFLOW PREVENTER WATTS 957 OR APPROVED EQUAL. PIPE DISCHARGE TO FLOOR DRAIN.
3. DI-ELECTRIC FLANGE. PIPING CONTINUED IN COPPER.
4. 3" MANIFOLD.
5. 2" TENANT SERVICE SHUT-OFF VALVE (TYPICAL OF 6).
6. STRAP-ON ULTRASONIC METER TRANSDUCER BADGER DYNASONIC TFX-5000 SERIES OR APPROVED EQUAL (TYPICAL OF 6).
7. ULTRASONIC METER PANEL. PROVIDE CABLING BETWEEN TRANSDUCER AND PANEL. (TYPICAL OF 6). MOUNT APPROX 4' A.F.F.
8. 2" TO INDIVIDUAL TENANT SUITES

1 WATER SERVICE - MECHANICAL AND RISER ROOM 700
N.T.S.

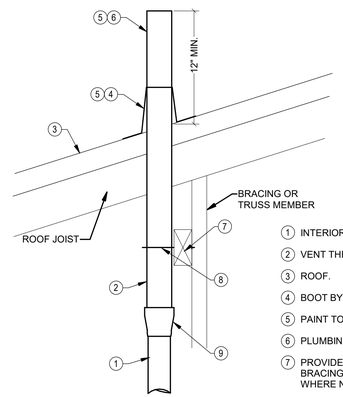

1. INTERIOR PLUMBING VENT PIPE.
2. VENT THRU ROOF.
3. ROOF.
4. BOOT BY G.C.
5. PAINT TO MATCH ROOF COLOR BY G.C.
6. PLUMBING VENT.
7. PROVIDE ADDITIONAL 2X4 BRACING BETWEEN TRUSSES WHERE NECESSARY
8. U-BOLT TYPE CLAMP.
9. PIPE INCREASER (IF REQUIRED)

COORDINATE EXACT LOCATION TO MISS ROOF RIBS

6 VENT THRU SLOPED ROOF
N.T.S.

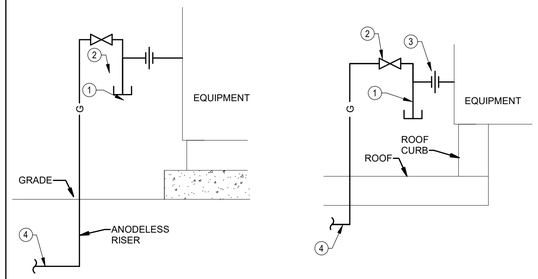

EXTERIOR GRADE MOUNTED EQUIPMENT

ROOFTOP EQUIPMENT SUPPLIED FROM ROOFTOP

1. FULL SIZE DIRT LEG.
2. SHUT OFF VALVE.
3. UNION.
4. SEE PLAN FOR CONTINUATION

5 GAS CONNECTIONS
N.T.S.

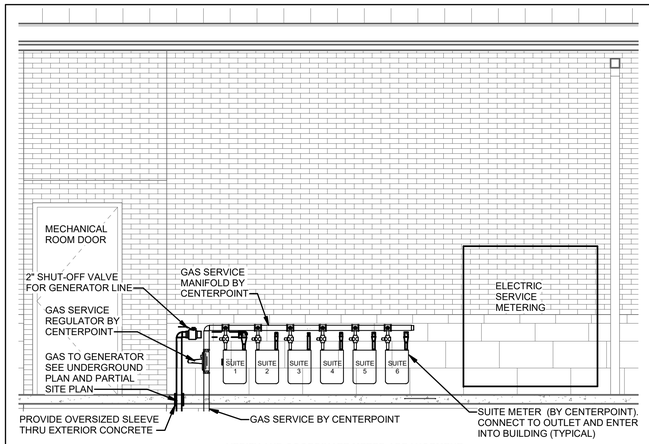

VERIFY AND COORDINATE METER ARRANGEMENT WITH CENTERPOINT PRIOR TO RUNNING PIPING

4 PROPOSED GAS SERVICE
N. T. S.

GAS LOAD SCHEDULE

GENERAL NOTES
- PIPING SIZED USING THE LONGEST LENGTHMETHOD.
- LOW PRESSURE (7" W.C.) GAS PIPING SIZED USING TABLE 402.4(2) OF THE 2015 IFC.

ITEM	LOAD	
SUITE 1 - COMMON AREAS & GENERATOR		
RTU 1	110	CFH
GENERATOR	280	CFH
SUITE 1 TOTAL	**390**	**CFH**
SUITE 2 - BMV LICENSE		
RTU 2	110	CFH
SUITE 2 TOTAL	**110**	**CFH**
SUITE 3 - OHIO STATE PATROL		
RTU3	110	CFH
UNIT HEATER	200	CFH
UNIT HEATER	200	CFH
RADIANT HEATER	80	CFH
RADIANT HEATER	80	CFH
SUITE 3 TOTAL	**670**	**CFH**
SUITE 4 - BMV DRIVER'S EXAMINATION		
RTU4	67	CFH
SUITE 4 TOTAL	**67**	**CFH**
SUITE 5 - AUTO TITLE		
RTU 5	180	CFH
SUITE 5 TOTAL	**180**	**CFH**
SUITE 6 - MIAMI CO. DEPT. OF DEVELOPMENT		
RTU 6.1	180	CFH
RTU 6.2	67	CFH
SUITE 6 TOTAL	**247**	**CFH**
BUILDING TOTAL	**1664**	**CFH**

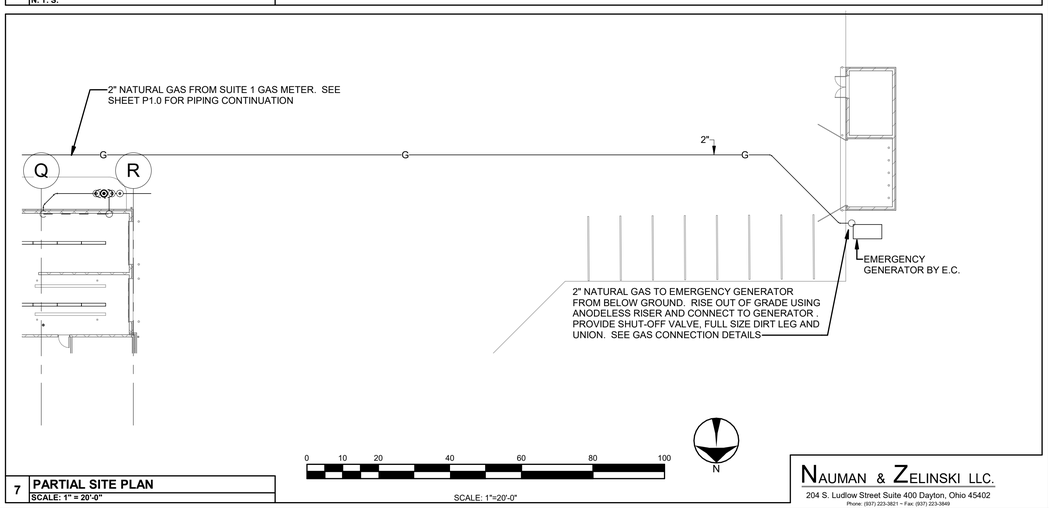

SCALE: 1"=20'-0"

7 PARTIAL SITE PLAN
SCALE: 1" = 20'-0"

NAUMAN & ZELINSKI LLC.
204 S. Ludlow Street Suite 400 Dayton, Ohio 45402
Phone: (937) 223-3821 - Fax: (937) 223-3849

App Architecture
creative focused design
615 Woodside Drive, Englewood, Ohio 45322
T 937.836.8898 F 937.832.3696
www.app-arch.com

STATE OF OHIO
JEFFREY D. ZELINSKI
63822
REGISTERED
PROFESSIONAL ENGINEER

MIAMI COUNTY ONE STOP CENTER
BOARD OF COMMISSIONERS FOR MIAMI COUNTY, OHIO
BARNHART ROAD, TROY, OHIO 45373

ISSUE

NO.	DATE	DESCRIPTION
1	04/08/2022	FOR CONSTRUCTION

DATE	04/08/22
JOB NO.	3923.00
DRAWN	DG
CHECKED	JDZ

COPYRIGHT © 2022 - App Architecture, Inc.

TITLE
DETAILS

SHEET NO.
P2.1

4/8/2022 1:21:28 PM

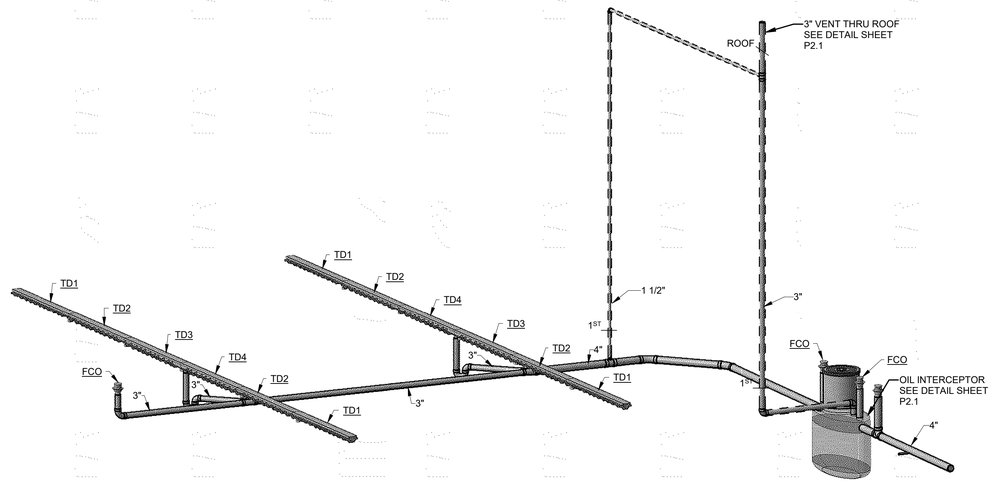

INSPECTION DRIVE THRU WASTE AND VENT

N.T.S

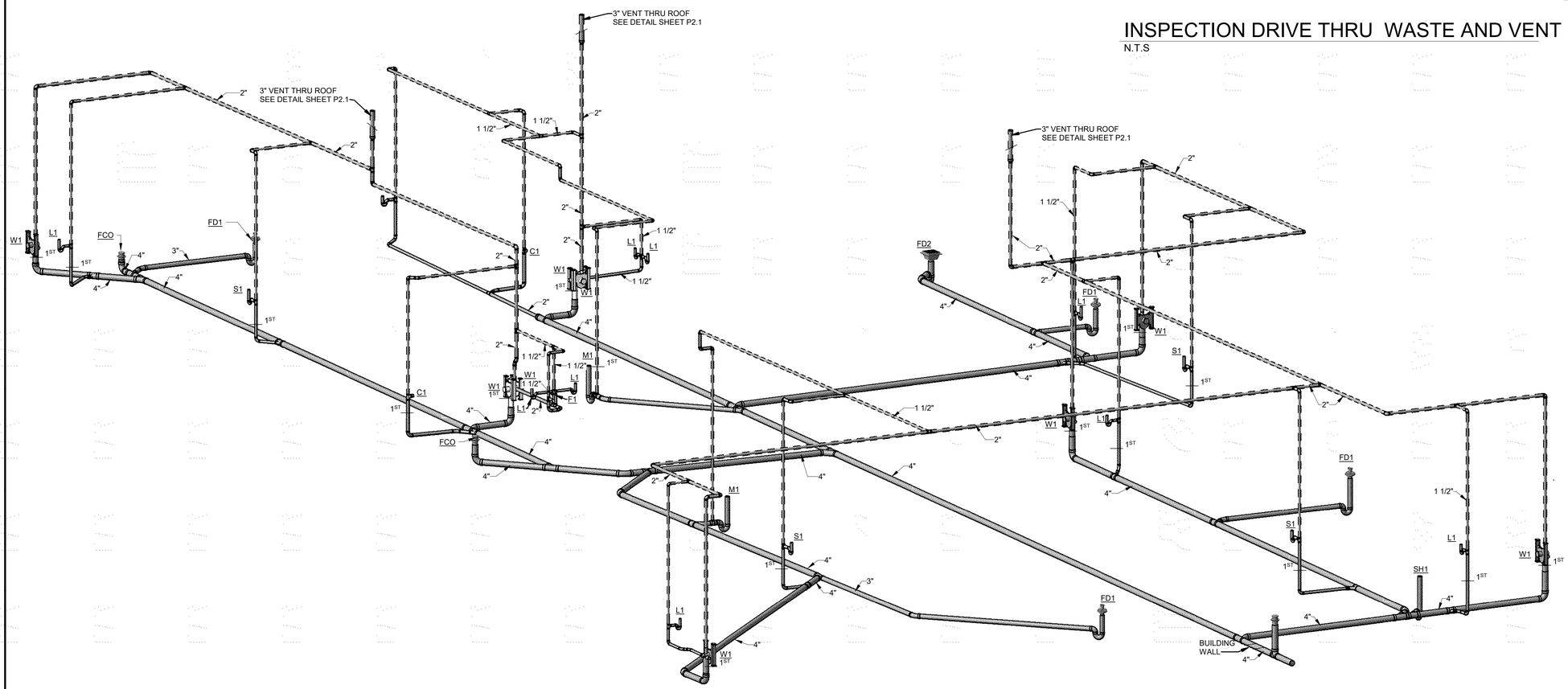

MAIN BUILDING SOIL, WASTE AND VENT

N.T.S

NAUMAN & ZELINSKI LLC.
204 S. Ludlow Street Suite 400 Dayton, Ohio 45402
Phone: (937) 223-3821 - Fax: (937) 223-3849

App Architecture
creative focused design
615 Woodside Drive, Englewood, Ohio 45322
T 937.836.8898 F 937.832.3696
www.app-arch.com

STATE OF OHIO
JEFFREY D. ZELINSKI
63822
REGISTERED
PROFESSIONAL ENGINEER

MIAMI COUNTY ONE STOP CENTER
BOARD OF COMMISSIONERS FOR MIAMI COUNTY, OHIO
BARNHART ROAD, TROY, OHIO 45373

ISSUE

NO.	DATE	DESCRIPTION
1	04/08/2022	FOR CONSTRUCTION

DATE	04/08/22
JOB NO.	3923.00
DRAWN	DG
CHECKED	JDZ

COPYRIGHT © 2022 - App Architecture, Inc.

TITLE
SOIL, WASTE, AND VENT DIAGRAM

SHEET NO.
P3.1

4/8/2022 1:21:36 PM

AIR DEVICE SCHEDULE

GENERAL NOTES

AIR DEVICES BASED ON PRICE, LOUVERS BASED ON GREENHECK. REFER TO SPECIFICATIONS FOR OTHER MANUFACTURERS.

MAXIMUM SOUND LEVEL AT NC-25 AT INDICATED AIR FLOW.

BALANCING DAMPER GENERALLY PROVIDED IN DUCT, NOT AT DEVICE.

STANDARD WHITE BAKED ACRYLIC FINISH UNLESS NOTED OTHERWISE.

DIFFUSERS SHALL BE 4-WAY THROW UNLESS OTHERWISE NOTED OR INDICATED ON DRAWINGS.

VERIFY CEILING TYPE AND PROVIDE APPROPRIATE MOUNTING FRAME WHERE REQUIRED.

TAG	DESCRIPTION	MODEL NO.	MATERIAL	ACCESSORIES	NOTES
S1 & S1A	2'X2' SQUARE PLAQUE DIFFUSER ROUND DUCT CONNECTION	SPD (ASPD)	STEEL (A) = ALUMINUM	INSULATED BACKPAN (STYLE 31)	
S2 & S2A	12"X12"SQUARE PLAQUE DIFFUSER ROUND DUCT CONNECTION	SPD (ASPD)	STEEL (A) = ALUMINUM		1
R1	RETURN GRILLE DEVICE SIZE - 24" X 24" 45° HORIZONTAL BLADES 1/2" SPACING	635	ALUMINUM		
R2	RETURN GRILLE DEVICE SIZE - 24" X 12" 45° HORIZONTAL BLADES 1/2" SPACING BLADES PARALLEL TO LONG DIMENSION	635	ALUMINUM		
R3	LOUVERED FACE SIDE WALL RETURN GRILLE DEVICE SIZE - INDICATED ON PLAN MOUNTING HEIGHT - INDICATED ON PLAN 45° HORIZONTAL BLADES 1/2" SPACING HORIZONTAL BLADES	635	ALUMINUM		2
E1	EXHAUST GRILLE DEVICE SIZE - 12" X 12" 45° HORIZONTAL BLADES 1/2" SPACING	635	ALUMINUM		1
E2	EXHAUST GRILLE DEVICE SIZE - 24" X 24" 45° HORIZONTAL BLADES 1/2" SPACING	635	ALUMINUM		
E3	LOUVERED FACE SIDE WALL EXHAUST GRILLE DEVICE SIZE - INDICATED ON PLAN MOUNTING HEIGHT - INDICATED ON PLAN 45° HORIZONTAL BLADES 1/2" SPACING HORIZONTAL BLADES	635	ALUMINUM		2
L1-OA	FIXED BLADE LOUVER DEVICE SIZE -32"x16" LOUVER FRAME SIZE - 4" FRAME MIN. 45% FREE AREA	ESD-635	ALUMINUM	BLACK BIRDSCREEN	2
L1-EA	FIXED BLADE LOUVER DEVICE SIZE -40"x16" LOUVER FRAME SIZE - 4" FRAME MIN. 45% FREE AREA	ESD-635	ALUMINUM	BLACK BIRDSCREEN	2
L2-OA	FIXED BLADE LOUVER DEVICE SIZE -32"x16" LOUVER FRAME SIZE - 4" FRAME MIN. 45% FREE AREA	ESD-635	ALUMINUM	BLACK BIRDSCREEN	2
L2-EA	FIXED BLADE LOUVER DEVICE SIZE -40"x16" LOUVER FRAME SIZE - 4" FRAME MIN. 45% FREE AREA	ESD-635	ALUMINUM	BLACK BIRDSCREEN	2

NOTES:

1. DEVICE TO BE SURFACE MOUNTED IN CENTER OF ACOUSTIC CEILING PAD FOR LAY-IN APPLICATION.
2. CUSTOM COLOR SELECTION BY ARCHITECT.

GENERAL NOTES - HVAC

1. PROVIDE COMPLETE AND FUNCTIONAL HVAC SYSTEMS PER HVAC PLANS INCLUDING FURNISHING, INSTALLING, TESTING AND WARRANTY OF ALL WORK.
2. WORK SHALL BE IN ACCORDANCE WITH THE 2017 OHIO BUILDING AND MECHANICAL CODES INCLUDING REFERENCED CODES AND STANDARDS, ALL FEDERAL, STATE, AND LOCAL CODES AND ALL APPLICABLE LAWS, ORDINANCES AND REGULATIONS.
3. WORK SHALL BE PERFORMED USING BEST QUALITY INSTALLATION PRACTICE BY A QUALIFIED TRADE CONTRACTOR AND THEIR QUALIFIED SUBCONTRACTORS. ALL CONTRACTORS SHALL BE LICENSED AND BE BONDED FOR THE WORK.
4. ALL WORK SHALL BE PERFORMED IN ACCORDANCE WITH OSHA AND OWNER SAFETY STANDARDS AND PRACTICES. ALL ON SITE PERSONNEL SHALL BE SAFETY TRAINED AND OWNER CERTIFIED.
5. OBTAIN REQUIRED PERMITS RELATED TO THE WORK AND PAY ALL PERMIT AND INSPECTION FEES.
6. THE AUTHORITY HAVING JURISDICTION SHALL INSPECT AND APPROVE ALL WORK. PROVIDE A FINAL CERTIFICATE OF APPROVAL FROM THE AUTHORITY HAVING JURISDICTION AND PRESENT TO THE OWNER BEFORE REQUESTING FINAL PAYMENT AND RELEASE OF RETAINAGE.
7. ALL EQUIPMENT AND MATERIAL REQUIRED FOR COMPLETE AND FUNCTIONAL HVAC SYSTEMS ARE INCLUDED IN THE CONTRACT.

GENERAL REQUIREMENTS - HVAC

1. PROTECT ALL FURNISHED MATERIAL AND EQUIPMENT FROM THEFT AND DETERIORATION OR CONTAMINATION DUE TO WEATHER OR CONSTRUCTION ACTIVITIES.
2. PROTECT OWNERS PROPERTY AND PROPERTY OF OTHER CONTRACTORS.
3. REMOVE ALL CONSTRUCTION DEBRIS FROM SITE. RECYCLE DEBRIS WHERE POSSIBLE. DISPOSE OF ALL HAZARDOUS MATERIAL IN ACCORDANCE WITH ENVIRONMENTAL LAWS.
4. PROVIDE ALL CUTTING AND PATCHING REQUIRED TO INSTALL MATERIAL AND EQUIPMENT.
5. PROVIDE APPROPRIATE FIRESTOPPING SYSTEM FOR ANNULAR SPACE OPENINGS AROUND DUCT AND PIPE PENETRATIONS THROUGH FIRE RESISTANCE RATED CONSTRUCTION. ANNULAR SPACE OPENINGS AT DUCT OR PIPE PENETRATIONS IN NON RATED CONSTRUCTION TO BE CLOSED AIR AND WATER TIGHT.
6. MATERIALS AND EQUIPMENT SHALL BE ONE OF THE BRAND OR MANUFACTURERS LISTED OR AN APPROVED EQUAL.
7. ELECTRONIC SHOP DRAWINGS SHALL BE PROVIDED IN .PDF FORMAT FOR THE ENGINEER'S APPROVAL FOR ALL MATERIALS AND EQUIPMENT. SHOP DRAWINGS SHALL BE SPECIFICALLY EDITED TO ELIMINATE SUPERFLUOUS INFORMATION AND SHALL CLEARLY SHOW SPECIFICS FOR THE MATERIAL AND EQUIPMENT PROVIDED.
8. COORDINATE INSTALLATION OF ACTUAL EQUIPMENT AND SYSTEMS PROVIDED WITH OTHER TRADES AND NEW OR EXISTING CONDITIONS.
9. INSTALL ALL MATERIALS AND EQUIPMENT IN ACCORDANCE WITH MANUFACTURER'S RECOMMENDATIONS AND REQUIREMENTS. PROVIDE REQUIRED CLEARANCES TO MEET CODE REQUIREMENTS, MANUFACTURER'S RECOMMENDATIONS AND MAINTENANCE SERVICE.
10. ALL WORK AREAS SHALL BE CLEANED TO MATCH ORIGINAL CONDITION.
11. PROVIDE TESTING, ADJUSTING AND BALANCING (TAB) REPORTS FOR AIR AND WATER SYSTEMS. A CERTIFIED AABC OR NEBB FIRM SHALL PROVIDE THE BALANCE.
12. MAINTAIN RECORD DRAWINGS AND PROVIDE TO THE OWNER OR HIS AGENT.
13. PROVIDE TWO (2) BOUND, PAPER COPIES OF ALL OPERATING AND MAINTENANCE MANUALS. PROVIDE AN ELECTRONIC COPY OF THE OPERATING AND MAINTENANCE MANUAL.
14. PROVIDE WARRANTY FOR ALL WORKMANSHIP, EQUIPMENT AND MATERIAL. WARRANTY SHALL BE 1 YEAR FOR PART AND LABOR, PROVIDE EXTENDED WARRANTY PERIOD FOR PARTS AND/OR LABOR AS IDENTIFIED OR AS STANDARD FOR CERTAIN ITEMS OF EQUIPMENT.
15. PROVIDE TRAINING AND MAINTENANCE INSTRUCTION FOR SYSTEMS AND EQUIPMENT TO THE OWNER. TRAINING SHALL BE 8 HOURS OF TIME WITH MAXIMUM TRAINING PERIOD OF 4 HOURS.

DUCTWORK LEGEND

20/12 20/12	RECTANGULAR DUCT FIRST FIGURE IS SIDE SHOWN
10"Ø 10"Ø	ROUND DUCT DIAMETER INDICATED
	DOUBLE WALL DUCT INTERIOR LINER PERFORATED
	DUCT WITH INTERIOR ACOUSTIC LINER
	FABRIC DUCT
	FLEXIBLE FABRIC STEEL DUCT
	INSULATED FLEXIBLE DUCT
R	CHANGE OF ELEVATION R = RISE, D = DROP
	ELBOW WITH TURNING VANES
20/12	ROUND RUNOUT DUCT TAP TO RECTANGULAR DUCT WITH SPIN-IN FITTING, SEE DETAIL
10"Ø	ROUND RUNOUT DUCT FITTING IN ROUND DUCT MAIN
	VOLUME DAMPER
FD	FIRE DAMPER
SD	SMOKE DAMPER
FS	COMBINATION FIRE/SMOKE DAMPER
S	DUCT MOUNTED SMOKE DETECTOR
	SUPPLY DUCT SECTION - RISE, DROP
	RETURN DUCT SECTION - RISE, DROP
S1-8" 200	SUPPLY AIR DEVICE S1 SEE SCHEDULE AND DETAIL 8" NECK SIZE 200 = REQUIRED AIR FLOW (CFM)
R1	TRANSFER AIR DEVICE R1 DEVICE TAG, SEE SCHEDULE AND DETAIL
R1-10" 300	RETURN/EXHAUST DEVICE TAG: R=RETURN, E=EXHAUST 300 = REQUIRED AIR FLOW (CFM) 10" NECK SIZE DEVICE SIZE AS INDICATED IN AIR DEVICE SCHEDULE
S2-24/12 300-8' 6"	SIDEWALL AIR DEVICE SEE AIR DEVICE SCHEDULE 24/12 = DEVICE SIZE 300 = AIR FLOW (CFM) 8' 6" = MOUNTING HEIGHT (AFF)
(E) 120	EXISTING AIR DEVICE REBALANCE TO AIR FLOW INDICATED
T	ROOM TEMPERATURE SENSOR

GENERAL LEGEND

EC	ELECTRICAL CONTRACTOR.
FC	FIRE PROTECTION CONTRACTOR.
GC	GENERAL CONTRACTOR.
HC	HVAC CONTRACTOR.
PC	PLUMBING CONTRACTOR.
TC	TEMPERATURE CONTROLS CONTRACTOR.
NIC	NOT IN CONTRACT.
AFF	ABOVE FINISHED FLOOR - TO BOTTOM OF ITEM UNLESS INDICATED OTHERWISE IN DRAWING.
(E)	EXISTING.
ES	EQUIPMENT SUPPLIER.
EM	EMERGENCY.
MH	MOUNTING HEIGHT.
S	SURFACE MOUNTED.
WP	WEATHER PROOF.
3	NOTE SYMBOL - APPLIES ONLY TO SHEET ON WHICH IS SHOWN.
2	DETAIL NOTE SYMBOL - APPLIES ONLY TO DETAIL ON WHICH IS SHOWN.
H-1	EQUIPMENT REFERENCE SYMBOL. ELECTRICAL CONNECTION REQUIRED.
H-1	EQUIPMENT REFERENCE SYMBOL. NO ELECTRICAL CONNECTION REQUIRED.
123	ROOM NUMBER.
2 H4.1	DETAIL SYMBOL DETAIL "2" SHOWN ON SHEET H4.1.
1 H3.1	SECTION SYMBOL SECTION "1" DESIGNATION, SHOWN ON SHEET H3.1.
	CONNECTION, NEW TO EXISTING.
	1 HOUR FIRE PROTECTION SEE SPECIFICATION FOR PENETRATION DETAILS
	2 HOUR FIRE PROTECTION SEE SPECIFICATION FOR PENETRATION DETAILS
	3 HOUR FIRE PROTECTION SEE SPECIFICATION FOR PENETRATION DETAILS
	ITEM TO BE REMOVED.
	EXISTING TO REMAIN.
	NEW ITEM.

HVAC INDEX OF DRAWINGS

SHEET	DRAWING TITLE
H0.1	LEGENDS AND SCHEDULES
H0.2	EQUIPMENT SCHEDULES
H0.3	RTU SCHEDULES & DETAILS
H2.1	FIRST FLOOR PLAN
H2.2	ROOF PLAN
H3.1	SECTIONS
H4.1	DETAILS
H4.2	DUCT DETAILS
H4.3	DUCT SCHEDULES
H5.1	VENTILATION CALCULATIONS

NAUMAN & ZELINSKI LLC.
204 S. Ludlow Street Suite 400 Dayton, Ohio 45402
Phone: (937) 223-3621 • Fax: (937) 223-3849

App Architecture
creative focused design
615 Woodside Drive, Englewood, Ohio 45322
T 937.836.8898 F 937.832.3696
www.app-arch.com

STATE OF OHIO
JEFFREY D. ZELINSKI
63822
REGISTERED
PROFESSIONAL ENGINEER

MIAMI COUNTY ONE STOP CENTER
BOARD OF COMMISSIONERS FOR MIAMI COUNTY, OHIO
BARNHART ROAD, TROY, OHIO 45373

ISSUE

NO.	DATE	DESCRIPTION
1	04/08/2022	FOR CONSTRUCTION

DATE	04/08/22
JOB NO.	3923.00
DRAWN	RS
CHECKED	JDZ

COPYRIGHT © 2022 - App Architecture, Inc.

TITLE
LEGENDS AND SCHEDULES

SHEET NO.
H0.1

4/8/2022 1:20:32 PM

FAN & ROOF VENTILATOR SCHEDULE

BASIS OF DESIGN - GREENHECK
REFER TO SPECIFICATIONS FOR OTHER MANUFACTURERS

REFER TO INSTALLATION DETAILS.

TAG#	SERVICE	AREA	DESCRIPTION	MODEL NUMBER & SIZE GREENHECK	ROOF OPENING (L x W)	CAPACITY AIRFLOW (CFM)	CAPACITY E.S.P. (IN. W.C.)	ELECTRICAL MOTOR RPM	ELECTRICAL MOTOR HP	ELECTRICAL V/PH	ELECTRIC: DISCONNECT WITH FAN	ELECTRIC: DISCONNECT BY E.C.	ELECTRIC: VFD	ELECTRIC: ECM, W/HOA CONTROLLER (BY HC)	DRIVE TYPE: DIRECT	DRIVE TYPE: BELT	MOUNTING: ROOF CURB	MOUNTING: SUSPENDED, INLINE	MOUNTING: CEILING	ACCESSORIES & OPTIONS: VIBRATION ISOLATION	ACCESSORIES & OPTIONS: INSULATION HOUSING	ACCESSORIES & OPTIONS: THERMAL CONTROL	ACCESSORIES & OPTIONS: SLOPNG ROOF CURB	ACCESSORIES & OPTIONS: HINGED ROOF CURB	ACCESSORIES & OPTIONS: CURB EXTENSION	ACCESSORIES & OPTIONS: POWDER COAT FINISH	ACCESSORIES & OPTIONS: EPOXY INTERIOR FINISH	CONTROLS: DDC CONTROLLED	CONTROLS: MANUALON/OFF SWITCH	CONTROLS: DIAL SPEED CONTROLLER	CONTROLS: MOTORIZED DAMPER	GRAVITY DAMPER	NOTES
EF-1-1	EXHAUST	WOMEN'S 103 MEN'S 102	DIRECT DRIVE CENTRIFUGAL DOWNBLAST	G-095-VG	15" X 15"	150	0.4"	1,075	1/4	120V/1ø	•			•	•		•						•			•				•	•		2,3, 4,6
EF-1-2	EXHAUST	CENTRAL DATA 104	INLINE CENTRIFUGAL	SQ-98-VG		250	0.35"	1,100	1/2	120V/1ø	•			•	•			•												•	•		1,3, 4,6
EF-1-3	EXHAUST	JANITOR 105	DIRECT DRIVE CENTRIFUGAL DOWNBLAST	G-095-VG	13" X 13"	75	0.35"	1,075	1/4	120V/1ø	•			•	•		•						•			•				•	•		2,3, 4,6
EF-2	EXHAUST	TOILET 206 BREAKROOM 204	DIRECT DRIVE CENTRIFUGAL DOWNBLAST	G-095-VG	13" X 13"	175	0.35"	1,100	1/4	120V/1ø	•			•	•		•						•			•				•	•		2,3, 4,6
EF-3-1	EXHAUST	BUS/TRUCK DRIVE THRU 317	INLINE CENTRIFUGAL	SQ-120-VG		800	0.35"	1,005	1/2	120V/1ø	•			•	•			•												•	•		2,3, 4,6
EF-3-2	EXHAUST	CAR/LIGHT TRUCK DRIVE THRU 316	INLINE CENTRIFUGAL	SQ-120-VG		800	0.35"	1,005	1/2	120V/1ø	•			•	•			•												•	•		2,3,4 ,6
EF-3-3	EXHAUST	STAFF TOILET 314 TOILET SHOWER 308	DIRECT DRIVE CENTRIFUGAL DOWNBLAST	G-095-VG	13" X 13"	175	0.35"	1,100	1/4	120V/1ø	•			•	•		•						•			•				•	•		2,3, 4,6
EF-4	EXHAUST	TOILET 403 BREAKROOM 405	DIRECT DRIVE CENTRIFUGAL DOWNBLAST	G-095-VG	13" X 13"	175	0.35"	1,100	1/4	120V/1ø	•			•	•		•						•			•				•	•		2,3, 4,6
EF-5	EXHAUST	TOILET 504 BREAKROOM 506	DIRECT DRIVE CENTRIFUGAL DOWNBLAST	G-095-VG	13" X 13"	175	0.35"	1,100	1/4	120V/1ø	•			•	•		•						•			•				•	•		2,3, 4,6
EF-6-1	EXHAUST	MEN'S 617 WOMEN'S 618 BREAKROOM 615	DIRECT DRIVE CENTRIFUGAL DOWNBLAST	G-095-VG	13" X 13"	250	0.35"	1,150	1/4	120V/1ø	•			•	•		•						•			•				•	•		2,3, 4,6
EF-6-2	EXHAUST	JANITOR 621	DIRECT DRIVE CENTRIFUGAL DOWNBLAST	G-095-VG	13" X 13"	100	0.35"	1,000	1/4	120V/1ø	•			•	•		•						•			•				•	•		2,3, 4,6

NOTES:

1. DIAL SPEED CONTROLLER MOUNTED REMOTE ON WALL. REFER TO HVAC PLANS FOR LOCATION.
2. DIAL SPEED CONTROLLER MOUNTED ON FAN FOR BALANCING
3. MOTORIZED DAMPER PROVIDED AND INSTALLED BY H.C., E.C. TO PROVIDE POWER TO DAMPER ACTUATOR.
4. MANUAL ON/OFF SWITCH MOUNTED REMOTE. REFER TO ELECTRICAL PLAN FOR LOCATION.
5. SEE EXHAUST FAN CONTROL DIAGRAM ON THIS SHEET.
6. PROVIDE HOA CONTROLLER (BY HC).

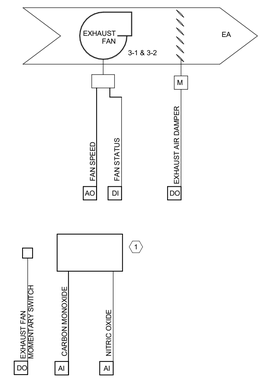

SEQUENCE OF OPERATION

A.	FAN OPERATION (BOTH EF-3-1 & EF-3-2)
	THE FAN START/STOP AND SPEED CONTROL SHALL BE VIA THE CO/NO2 MONITORING SYSTEM, OR A LOCAL MANUAL MOMENTARY OVER-RIDE WALL SWITCH.
	THE FAN SHALL OPERATE AT A 10% MINIMUM SPEED AT ALL TIMES, UNLESS AS INDICATED BELOW. WHILE AT MINIMUM SPEED THE ASSOCIATED INTAKE DAMPER SHALL REMAIN CLOSED. DAMPER SHALL OPEN WHEN THE FAN IS COMMANDED TO OPERATE ABOVE THE MIN. SPEED.
	THE FAN DISCHARGE AIR DAMPER SHALL REMAIN OPEN AT ALL TIMES THE FAN IS RUNNING. UPON A FAN SHUTDOWN THE DAMPER SHALL CLOSE.
B.	CO/NO2 MONITORING SYSTEM
	UPON A RISE IN CO OR NO2 LEVEL ABOVE SETPOINT THE FAN SHALL OPERATE AT 100% SPEED (50 PPM CO OR 30 PPM NO2). THE FAN SHALL OPERATE AT 100% SPEED. THE FAN SHALL RUN FOR A MINIMUM OF 30 MINUTES. AFTER A 30 MIN. PERIOD AND A DROP IN CO OR NO LEVELS BELOW 25% OF THE THRESHOLD LIMIT THE FAN SHALL RETURN TO 10% MIN. SPEED.
C.	MANUAL MOMENTARY WALL SWITCH
	THE MANUAL MOMENTARY OVER-RIDE SWITCH SHALL COMMAND THE FAN TO 100% SPEED FOR 1 HOUR (ADJ).
1	CARBON MONOXIDE/NITRIC OXIDE CONTROL PANEL. SEE H2.1 FOR MOUNTING LOCATION.
	- PROVIDE HONEYWELL 301C CONTROLLER.
	- 8 INPUTS - 2 WALL MOUNTED CO SENSORS. 2 WALL MOUNTED NO2 SENSORS. 2 DUCT MOUNTED CO SENSORS. 2 DUCT MOUNTED NO2 SENSORS.
	- 3 OUTPUTS - LOW LEVEL, HIGH LEVEL, 25% OF HIGH LEVEL.

1 EF-3-1 & 3-2 - CAR/TRUCK CONTROL DIAGRAM
N.T.S.

ELECTRIC UNIT HEATER SCHEDULE

GENERAL NOTES
HEATING CAPACITY BASED ON 70° ΔT AIR TEMPERATURE DIFFERENCE.

UNIT NO.	DESCRIPTION	LOCATION	MANUFACTURER / MODEL	MOUNTING	INPUT (KW)	AIR FLOW (CFM)	DIMENSIONS L (IN.)	DIMENSIONS D (IN.)	DIMENSIONS H (IN.)	VOLTAGE / PHASE	NOTES
EUH-1	ELECTRIC WALL MOUNTED UNIT HEATER	WAITING 301	QMARK AWH3150F	VERTICAL, WALL-MTD-RECESSED	1.5	100	20	16	4	120V/1PH	
EUH-2-1	ELECTRIC WALL MOUNTED UNIT HEATER	EMPLOYEE AREA 202	QMARK AWH3150F	VERTICAL, WALL-MTD-RECESSED	1.5	100	20	16	4	120V/1PH	
EUH2-2	ELECTRIC WALL MOUNTED UNIT HEATER	TOILET 206	QMARK AWH3150F	VERTICAL, WALL-MTD-RECESSED	1.5	100	20	16	4	120V/1PH	
EUH-3-1	ELECTRIC WALL MOUNTED UNIT HEATER	LCS INSPECTION 310	QMARK AWH3150F	VERTICAL, WALL-MTD-RECESSED	1.5	100	20	16	4	120V/1PH	
EUH-3-2	ELECTRIC WALL MOUNTED UNIT HEATER	TLT/SHOWER 308	QMARK AWH3150F	VERTICAL, WALL-MTD-RECESSED	1.5	100	20	16	4	120V/1PH	
EUH-3-3	ELECTRIC WALL MOUNTED UNIT HEATER	CHANGING ROOM - 309	QMARK AWH3150F	VERTICAL, WALL-MTD-RECESSED	1.5	100	20	16	4	120V/1PH	
EUH-3-4	ELECTRIC WALL MOUNTED UNIT HEATER	CHANGE - 307	QMARK AWH3150F	VERTICAL, WALL-MTD-RECESSED	1.5	100	20	16	4	120V/1PH	
EUH-4-1	ELECTRIC WALL MOUNTED UNIT HEATER	STORAGE 402	QMARK AWH3150F	VERTICAL, WALL-MTD-RECESSED	1.5	100	20	16	4	120V/1PH	
EUH-4-2	ELECTRIC WALL MOUNTED UNIT HEATER	TOILET 403	QMARK AWH3150F	VERTICAL, WALL-MTD-RECESSED	1.5	100	20	16	4	120V/1PH	
EUH-5	ELECTRIC WALL MOUNTED UNIT HEATER	WORKSTATION 502	QMARK AWH3150F	VERTICAL, WALL-MTD-RECESSED	1.5	100	20	16	4	120V/1PH	
EUH-6-1	ELECTRIC WALL MOUNTED UNIT HEATER	CORRIDOR 603	QMARK AWH3150F	VERTICAL, WALL-MTD-RECESSED	1.5	100	20	16	4	120V/1PH	
EUH-6-2	ELECTRIC WALL MOUNTED UNIT HEATER	MECHANICAL AND RISER ROOM 700	QMARK AWH3150F	VERTICAL, WALL-MTD-RECESSED	1.5	100	20	16	4	120V/1PH	

NOTES:

HEATING UNIT SCHEDULE - GAS

REMOTE THERMOSTAT
BASIS OF DESIGN: REZNOR
GUH-3-1 & GUH-3-2 REZNOR UDAS

UNIT NO.	SERVICE	MOUNTING	(MBH) INPUT/OUTPUT	CFM	W	AMPS	VOLT/PH	DIMENSIONS L (IN.)	DIMENSIONS D (IN.)	DIMENSIONS H (IN.)	WEIGHT	NOTES
GUH-3-1	BUS/TRUCK DRIVE THRU 317	HUNG FROM STRUCTURE	200/166	2500	400	5	120V/1PH	39"	42"	21"	235 LBS	1,2
GUH-3-2	CAR/LIGHT TRUCK DRIVE THRU 316	HUNG FROM STRUCTURE	200/166	2500	400	5	120V/1PH	39"	42"	21"	235 LBS	1,2

NOTES:
1. PROVIDE STAINLESS STEEL HEAT EXCHANGER AND STAINLESS STEEL BURNERS.
2. MOUNT THERMOSTAT DOWNSTREAM OF DAMPER IN OA DUCT. SEE PLAN FOR LOCATION.

AIR CURTAIN SCHEDULE

GENERAL NOTES
BASIS OF DESIGN: BERNER AIR CURTAINS

UNIT NO.	AREA	MODEL NO.	AIRFLOW (CFM)	HEAT OUTPUT	MOTOR(S) / HP	ELECTRICAL KW	ELECTRICAL V/PH	ELECTRICAL MCA	ELECTRICAL MOCP	DIMENSIONS L (IN.)	DIMENSIONS W (IN.)	DIMENSIONS H (IN.)	WEIGHT (LBS)	NOTES
AC 1	ENTRY VESTIBULE - 100	ARC16-2072E	4,144	95.6	(2) 1 HP	28	208V/3PH	(2) 52	(2) 60	77	26	15	200	1-4
AC 6-1	VESTIBULE 600	ARC16-2072E	4,144	95.6	(2) 1 HP	28	208V/3PH	(2) 52	(2) 60	77	26	15	200	1-4
AC 6-2	INSPECTORS OFFICE - 611	ARC16-1036E	2,072	47.8	1 HP	14	208V/3PH	45.4	60	41	26	15	110	1-3

NOTES:
1. DISCONNECT SWITCH WITH UNIT.
2. STANDARD UNIT CONTROLS.
3. PROVIDE MAGNETIC DOOR SWITCH WITH UNIT.
4. EQUIPMENT HAS 2 ELECTRICAL CIRCUITS. ELECTRICAL DATA LISTED IS FOR INDIVIDUAL CIRCUIT

RADIANT HEATER SCHEDULE - GAS

BASIS OF DESIGN: RE-VERBER-RAY

RH-3-1 AND RH-3-2 MP-25-80
REMOTE THERMOSTAT

UNIT NO.	SERVICE	MOUNTING	(MBH) INPUT/OUTPUT	AMPS	VOLT/PH	DIMENSIONS L	WEIGHT	NOTES
RH-3-1	BUS/TRUCK DRIVE THRU 317	HUNG FROM STRUCTURE	80/72	5	120V/1PH	26'-5"	140 LBS	1,2
RH-3-2	CAR/LIGHT TRUCK DRIVE THRU 316	HUNG FROM STRUCTURE	80/72	5	120V/1PH	26'-5"	140 LBS	1,2

NOTES:
1. PROVIDE SIDE SHIELD ON RADIANT TUBE TO PROJECT HEAT AWAY FROM THE WALL.
2. COORDINATE EQUIPMENT LOCATION WITH OTHER TRADES. PROVIDE SIDE SHIELDS AS NEEDED TO PROTECT EQUIPMENT (ELECTRIC HOSE REELS, FANS, ETC.)

NAUMAN & ZELINSKI LLC.
204 S. Ludlow Street Suite 400 Dayton, Ohio 45402
Phone: (937) 223-3821 - Fax: (937) 223-3849

App Architecture
creative focused design
615 Woodside Drive, Englewood, Ohio 45322
T 937.836.8898 F 937.832.3696
www.app-arch.com

STATE OF OHIO
JEFFREY D. ZELINSKI
63822
REGISTERED
PROFESSIONAL ENGINEER

MIAMI COUNTY ONE STOP CENTER
BOARD OF COMMISSIONERS FOR MIAMI COUNTY, OHIO
BARNHART ROAD, TROY, OHIO 45373

ISSUE

NO.	DATE	DESCRIPTION
1	04/08/2022	FOR CONSTRUCTION

DATE	04/08/22
JOB NO.	3923.00
DRAWN	RS
CHECKED	JDZ

COPYRIGHT © 2022 - App Architecture, Inc.

TITLE
EQUIPMENT SCHEDULES

SHEET NO.
H0.2

4/8/2022 1:20:34 PM

ROOFTOP COOLING/HEATING UNITS

UNIT TAG	RTU-1	RTU-2	RTU-3	RTU-4	RTU-5	RTU-6-1	RTU-6-2
BASIS OF DESIGN	CARRIER	CARRIER	CARRIER	CARRIER	CARRIER	CARRIER	CARRIER
MODEL	48FCEM07B2A5-2W0A0	48FCED07B2A5-2W0G0	48FCEM07B2A5-2W0A0	48FCDA05B2A5-2W0A0	48HCED09B2A5-2W0G0	48HCED09B2A5-2W0G0	48FCDA05B2A5-2W0A0
SERVICE	COMMON AREA	BMV - LICENSE	OHIO STATE PATROL	BMV - DRIVERS EXAM	BMV - TITLE	DEPARTMENT OF DEVELOPMENT EXTERIOR	DEPARTMENT OF DEVELOPMENT INTERIOR
DESCRIPTION							
MOUNTING	ROOF	ROOF	ROOF	ROOF	ROOF	ROOF	ROOF
EVAPORATOR FAN							
AIRFLOW (CFM)	1,675	2,125	1,975	1,150	2,750	2,900	1,250
ESP. (" W.G.)	1"	1"	1"	1"	1"	1.25"	1.25"
MIN. OUTSIDE AIR - CFM/%	4050 CFM/24%	350 CFM/17%	300 CFM/15%	200 CFM/17%	400 CFM/15%	300 CFM/11%	185 CFM/15%
VARIABLE FREQUENCY DRIVE							
COOLING - BASED ON 95/76 (DB/WB) O.A. & 78 DB, 50% RH R.A. CONDITIONS							
TONNAGE	6 TONS	6 TONS	6 TONS	4 TONS	8.5 TONS	8.5 TONS	4 TONS
TOTAL (MBH)	70	73	70	45	99	99	46
SENSIBLE (MBH)	49	55	52	30	74	75	31
ENTER. AIR (DB/WB)	80/67	80/67	80/67	80/67	80/67	80/67	80/67
SUPPLY AIR (DB/WB)	55/54	55/54	55/54	55/54	55/54	55/54	55/54
EER	11.0	12.0	11.0	11.0	12.0	12.0	11.0
HEATING - REQ. NATURAL GAS INPUT PRESSURE: 4.5" W.C. MIN./14" W.C. MAX. - BASED ON 0ºF O.A., 72ºF R.A. CONDITIONS							
GAS INPUT (MBH)	110	125	110	67	180	180	67
OUTPUT (MBH)	88	103	88	54	148	148	54
ENTER. AIR DB	52	55	60	60	60	60	60
SUPPLY AIR (DB/WB)	100	100	100	103	110	110	103
ELECTRIC							
CIRCUIT SIZE MCA	28	34	28	26	41	41	26
MOCP	45	50	45	30	50	50	30
VOLTAGE/HZ/PHASE	208V/3ø	208V/3ø	208V/3ø	208V/3ø	208V/3ø	208V/3ø	208V/3ø
PHYSICAL UNIT DATA							
LENGTH	75"	88"	75"	75"	89"	89"	75"
WIDTH	47"	60"	47"	47"	60"	60"	47"
HEIGHT - NOT INCLUDING CURB	42"	42"	42"	34"	50"	50"	34"
MAX UNIT OP. WEIGHT (LBS)	1,000#	1,300#	1,000#	1,000#	1,500#	1,500#	1,000#
UNIT OPTIONS							
ECONOMIZER HOOD	•	•	•	•	•	•	•
MIN. O.A. HOOD	•	•	•	•	•	•	•
CONSTANT AIR VOLUME	•	•	•	•	•	•	•
VARIABLE AIR VOLUME							
3-STAGE, DUAL COMPRESSORS					•	•	
2-STAGE, SINGLE COMPRESSOR			•	•			•
STAINLESS STEEL HEAT EXCHANGER	•	•	•	•	•	•	•
RETURN AIR SMOKE DETECTOR		•			•	•	•
14" ROOF CURB ADAPTER	•	•	•	•	•	•	•
POWERED RELIEF FAN							
BAROMETRIC GRAVITY RELIEF DAMPER	•	•	•	•	•	•	•

NOTES:

1. PROVIDE 5-YEAR COMPRESSOR WARRANTIES.
2. PROVIDE STANDARD 2" PLEATED MERV 8 FILTERS.
3. PROVIDE 10-YEAR S.S. HEAT EXCHANGER PARTS-ONLY WARRANTY.
4. SEE ROOFTOP UNIT MOUNTING DETAIL, DETAIL 2, SHEET H0.3.
5. COOLING COIL CONDENSATE TRAP PER DETAIL 3, SHEET H0.3
6. PROVIDE 7-DAY PROGRAMMABLE THERMOSTAT.
7. TIE SMOKE DETECTORS INTO BUILDING FIRE ALARM SYSTEM. COORDINATE MANUFACTURER/TYPE.

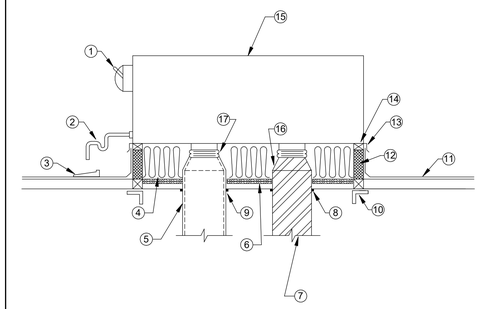

1. ELECTRICAL DISCONNECT W/ GFI RECEPTACLE SUPPLIED BY UNIT MANUFACTURER. POWER CONN. BY E.C.
2. CONDENSATE DRAIN, REFER TO DETAIL
3. PROVIDE CONCRETE SPLASH BLOCK ON NEOPRENE PAD UNDER CONDENSATE DRAIN
4. FILL ALL VOIDS BETWEEN ROOF DECK & BOTTOM OF UNIT WITH UNFACED BATT INSULATION
5. EXTERNALLY INSULATED SUPPLY DUCT, REFER TO PLANS FOR SIZE
6. PROVIDE TWO LAYERS OF 5/8" WATER RESISTANT GYPSUM BOARD ON ROOF DECK
7. INTERNALLY INSULATED RETURN DUCT, REFER TO PLANS FOR SIZE
8. SEAL AROUND DUCT PENETRATIONS, TYP.
9. ROOF OPENINGS SHALL BE NO LARGER THAN REQUIRED FOR DUCT PENETRATIONS.
10. STRUCTURAL SUPPORT BY OTHERS, TYP.
11. FLASHING, CANT STRIPS (IF REQUIRED), ROOFING MATERIAL & ROOF CONSTRUCTION BY ROOFING CONTRACTOR
12. 14" HIGH INSULATED ROOF CURB PROVIDED BY THE H.C. SEE DETAIL.
13. COUNTER FLASHING BY H.C.
14. NAILING STRIP
15. ROOFTOP UNIT - REFER TO PLANS FOR CAPACITIES
16. DUCT TRANSITION AS REQUIRED, TYP.
17. FLEXIBLE DUCT CONNECTION, TYP.

1 ROOFTOP UNIT
N.T.S.

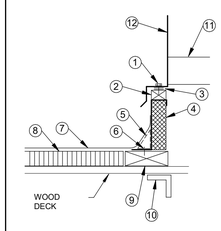

1. SECURE EQUIPMENT TO CURB WITH 3/8" LAG BOLTS PER MFR. RECOMMENDATION.
2. PRESSURE TREATED WOOD NAILER.
3. GASKET PROVIDED WITH ROOFTOP UNIT.
4. 14" HIGH ALUMINUM CURB WITH 1.5" FIBERGLASS INSULATION.
5. FLASHING, CANT STRIPS (IF REQUIRED), ROOFING MATERIAL & ROOFING CONSTRUCTION BY CONTRACTOR.
6. FASTEN CURB BASE TO BLOCKING.
7. EXISTING ROOFING.
8. EXISTING INSULATION.
9. PRESSURE TREATED WOOD BLOCKING BY H.C. FASTEN TO DECK. BLOCKING TO BE SAME SIZE AS INSULATION THICKNESS.
10. STEEL FRAMING BY H.C.
11. ROOFTOP BASE.
12. ROOFTOP UNIT.

2 ROOFTOP UNIT ROOF CURB
N.T.S.

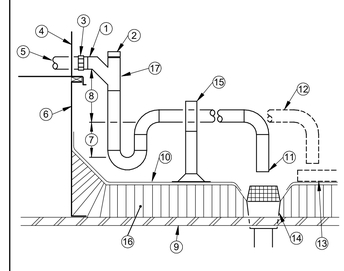

1. DRAIN PIPE. SAME SIZE AS UNIT OUTLET.
2. CLEANOUT PLUG.
3. UNION.
4. SIDE OF ROOFTOP UNIT.
5. FROM DRAIN PAN.
6. 14" HIGH ROOF CURB. SEE DETAIL.
7. 1/2 OF NO. 8 HEIGHT.
8. 1" + EACH 1" OF UNIT STATIC PRESSURE.
9. ROOF DECK.
10. ROOFING MEMBRANE.
11. OPEN DRAIN - 1" AIR GAP.
12. ALTERNATE ROUTING OF DRAIN.
13. 12"x12"x1" THICK CONCRETE SPLASH BLOCK. PLACE ON TOP OF ADDITIONAL PIECE OF ROOFING MEMBRANE.
14. ROOF DRAIN.
15. ADJUSTABLE PIPE SUPPORT. ERICO CADDY PYRAMID EZ OR EQUAL. SET SUPPORT ON MEMBRANE.
16. ROOF INSULATION.
17. DRAINAGE WYE FITTING.

3 ROOFTOP COOLING COIL CONDENSATE PIPING
N.T.S.

NAUMAN & ZELINSKI LLC.
204 S. Ludlow Street Suite 400 Dayton, Ohio 45402
Phone: (937) 223-3821 • Fax: (937) 223-3849

App Architecture
creative focused design
615 Woodside Drive, Englewood, Ohio 45322
T 937.836.8898 F 937.832.3696
www.app-arch.com

STATE OF OHIO
JEFFREY D. ZELINSKI
63822
REGISTERED
PROFESSIONAL ENGINEER

MIAMI COUNTY ONE STOP CENTER
BOARD OF COMMISSIONERS FOR MIAMI COUNTY, OHIO
BARNHART ROAD, TROY, OHIO 45373

ISSUE

NO.	DATE	DESCRIPTION
1	04/08/2022	FOR CONSTRUCTION

DATE	04/08/22
JOB NO.	3923.00
DRAWN	RS
CHECKED	JDZ

COPYRIGHT © 2022 - App Architecture, Inc.

TITLE
RTU SCHEDULES & DETAILS

SHEET NO.
H0.3

4/8/2022 1:20:35 PM

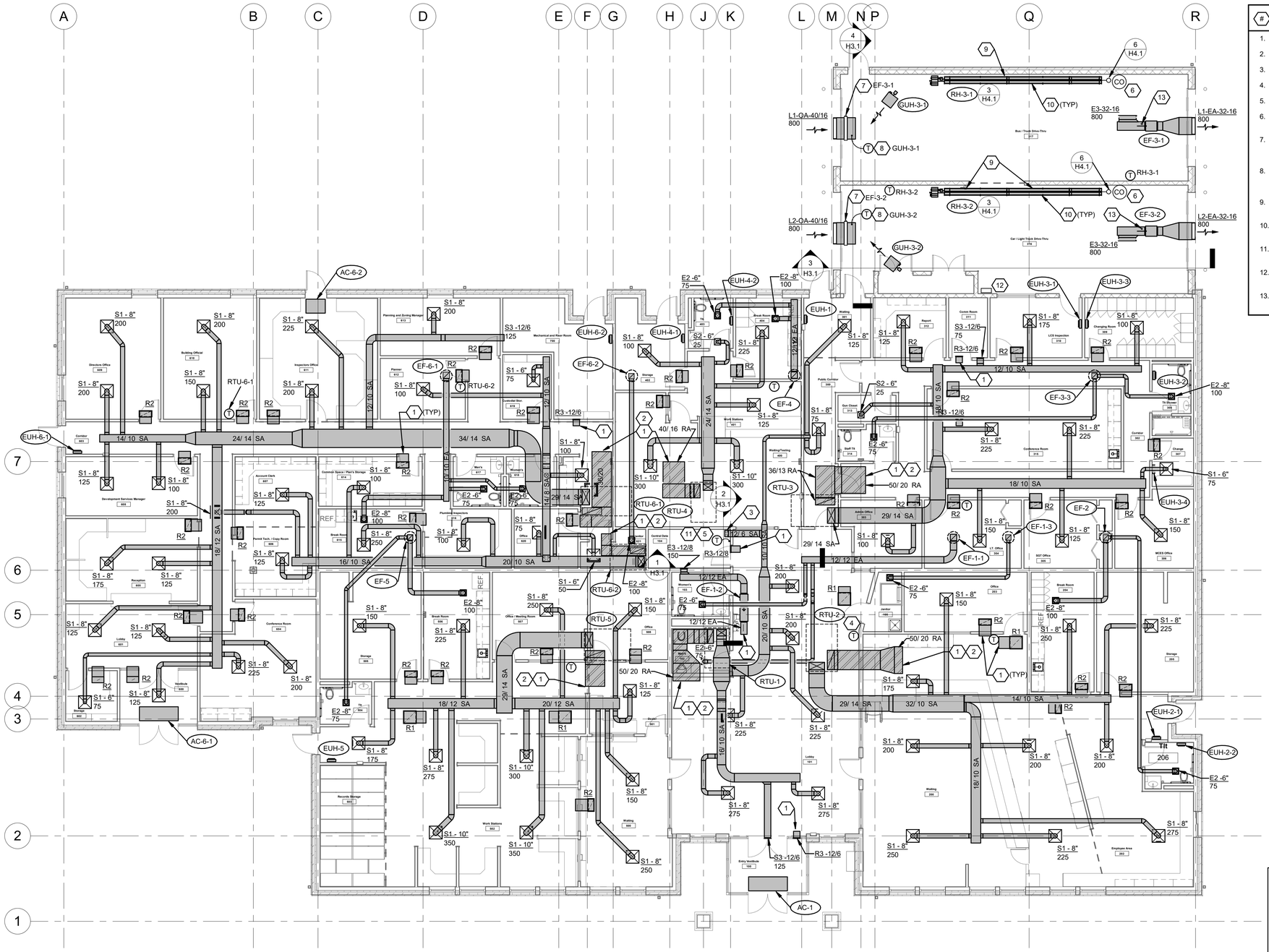

CONSTRUCTION NOTES

1. DUCT OPEN TO PLENUM.
2. PROVIDE BIRDSCREEN OVER DUCT OPENING.
3. 12/6 DUCT DROP DOWN TO 12" A.F.F. AND TERMINATE.
4. PROVIDE LOCKING COVER OVER THERMOSTAT.
5. TEMPERATURE SENSOR TO CONTROL EXHAUST FAN EF-1-2.
6. CO & NO_2 WALL MOUNTED SENSOR. RUN INPUTS TO CONTROL PANEL.
7. MOTORIZED DAMPER, INTERLOCK WITH ASSOCIATED EXHAUST FAN (INDICATED ON PLAN). DAMPER TO OPEN WHEN FAN RUNS ABOVE 10% SPEED.
8. TEMPERATURE SENSOR TO CONTROL GAS-FIRED UNIT HEATER INDICATED ON PLAN. GUH TO RUN WHEN TEMPERATURE IS <40 DEG. F.
9. PROVIDE SIDE SHIELD ON RADIANT HEATER TO DEFLECT HEAT AWAY FROM WALL.
10. PROVIDE SIDE SHIELDS AS NEEDED TO PROTECT EQUIPMENT (ELECTRIC HOSE REELS, FANS, ETC.).
11. PROVIDE REMOTE DIAL SPEED CONTROLLER ON WALL FOR EXHAUST FAN EF-1-2.
12. CO & NO_2 CONTROL PANEL, EQUAL TO HONEYWELL 301C. SEE CONTROL DETAIL, SHEET H0.2 FOR SEQUENCE.
13. DUCT MOUNTED CO & NO_2 SENSOR. SEND READING TO CONTROL PANEL.

FIRST FLOOR - HVAC PLAN

0 4 8 16 24 32 40

SCALE: 1/8"=1'-0"

N

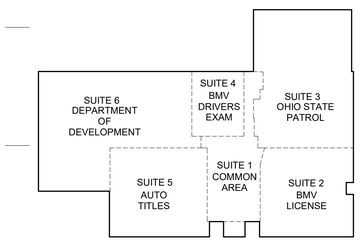

SUITE KEY PLAN

NAUMAN & ZELINSKI LLC.
204 S. Ludlow Street Suite 400 Dayton, Ohio 45402
Phone: (937) 223-3621 - Fax: (937) 223-3849

App Architecture
creative focused design
615 Woodside Drive, Englewood, Ohio 45322
T 937.836.8898 F 937.832.3696
www.app-arch.com

STATE OF OHIO
JEFFREY D. ZELINSKI
63822
REGISTERED
PROFESSIONAL ENGINEER

MIAMI COUNTY ONE STOP CENTER
BOARD OF COMMISSIONERS FOR MIAMI COUNTY, OHIO
BARNHART ROAD, TROY, OHIO 45373

ISSUE

NO.	DATE	DESCRIPTION
1	04/08/2022	FOR CONSTRUCTION

DATE	04/08/22
JOB NO.	3923.00
DRAWN	RS
CHECKED	JDZ

COPYRIGHT © 2022 - App Architecture, Inc.

TITLE
FIRST FLOOR PLAN

SHEET NO.
H2.1

4/8/2022 1:20:49 PM

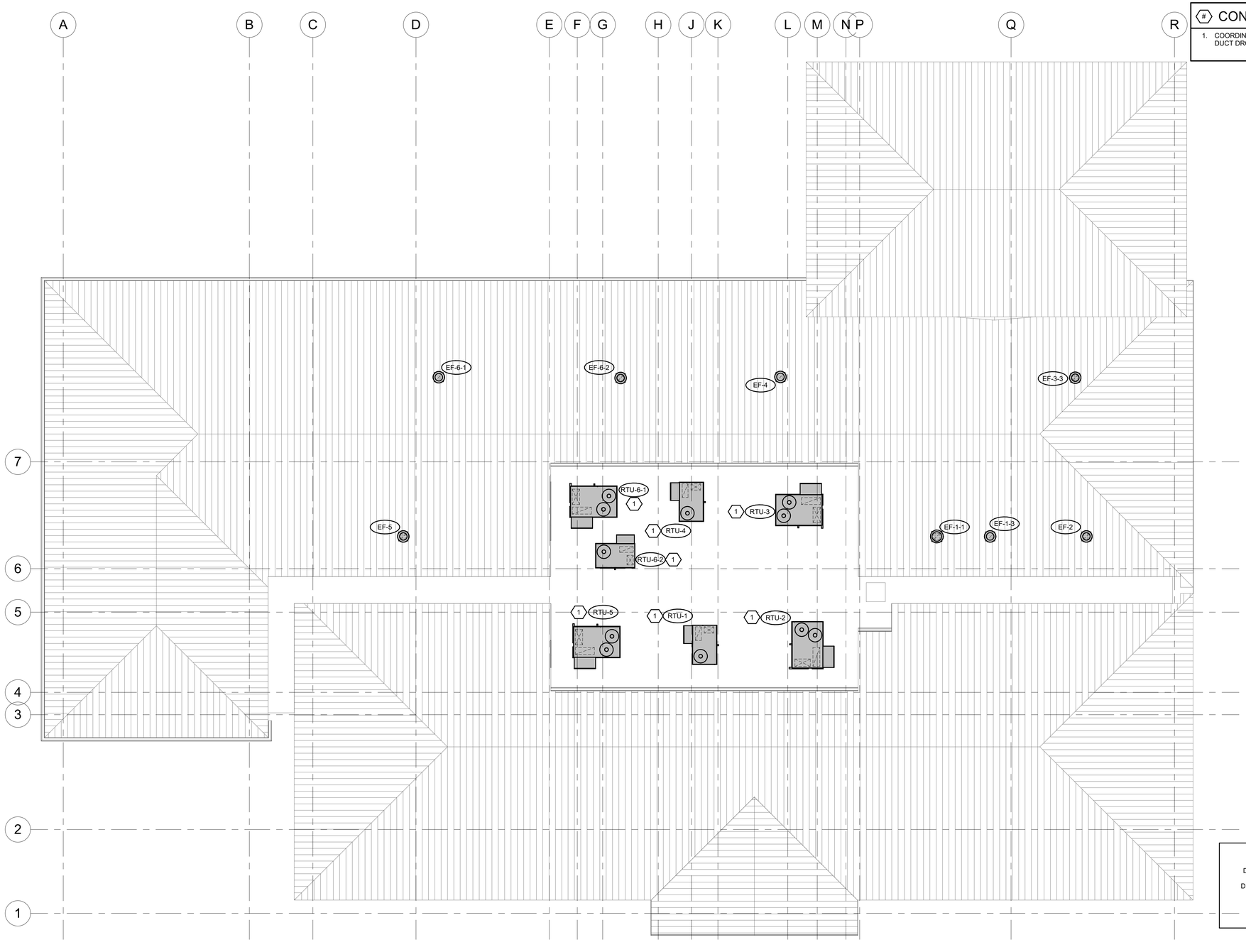

CONSTRUCTION NOTES

1. COORDINATE UNIT LOCATION WITH STRUCTURE TO INSURE DUCT DROPS ARE BETWEEN JOISTS.

ROOF PLAN

0 4 8 16 24 32 40

SCALE: 1/8"=1'-0"

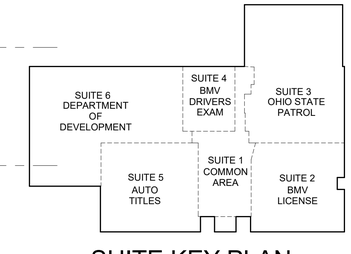

SUITE KEY PLAN

NAUMAN & ZELINSKI LLC.
204 S. Ludlow Street Suite 400 Dayton, Ohio 45402
Phone: (937) 223-3821 • Fax: (937) 223-3849

App Architecture
creative focused design
615 Woodside Drive, Englewood, Ohio 45322
T 937.836.8898 F 937.832.3696
www.app-arch.com

STATE OF OHIO
JEFFREY D. ZELINSKI
63822
REGISTERED
PROFESSIONAL ENGINEER

MIAMI COUNTY ONE STOP CENTER
BOARD OF COMMISSIONERS FOR MIAMI COUNTY, OHIO
BARNHART ROAD, TROY, OHIO 45373

ISSUE

NO.	DATE	DESCRIPTION
1	04/08/2022	FOR CONSTRUCTION

DATE	04/08/22
JOB NO.	3923.00
DRAWN	RS
CHECKED	JDZ

COPYRIGHT © 2022 - App Architecture, Inc.

TITLE
ROOF PLAN

SHEET NO.
H2.2

4/8/2022 1:20:41 PM

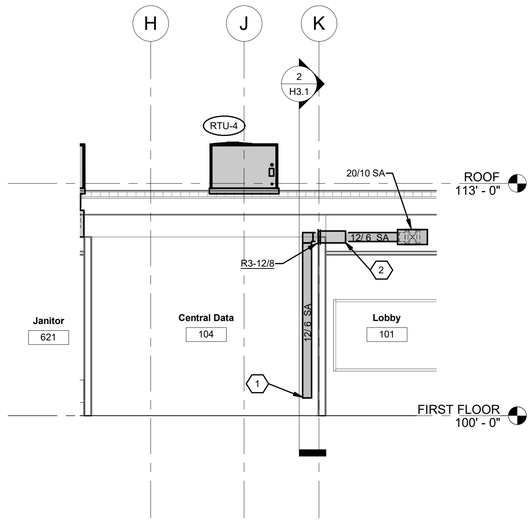

1 H3.1 CENTRAL DATA SECTION - LOOKING SOUTH

0 2 4 8 12 16 20

SCALE: 1/4"=1'-0"

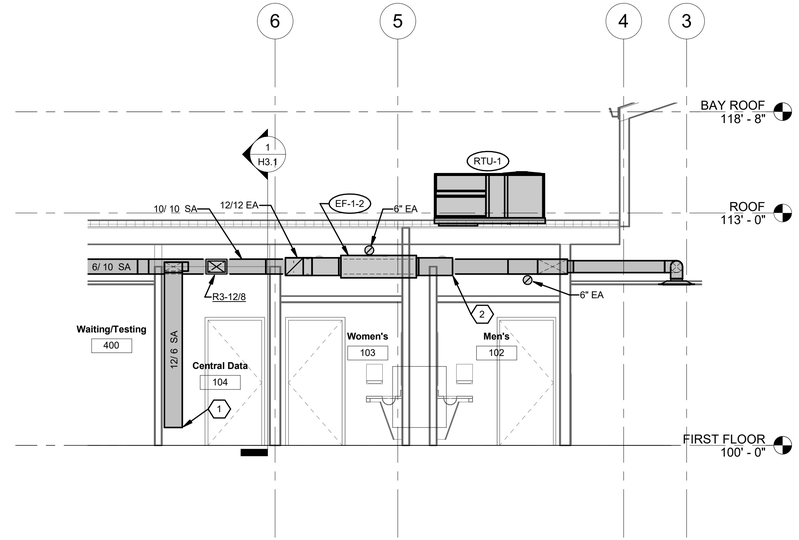

2 H3.1 CENTRAL DATA SECTION - LOOKING WEST

0 2 4 8 12 16 20

SCALE: 1/4"=1'-0"

SECTION NOTES

1. DUCT DROP DOWN TO 12" A.F.F. AND TERMINATE.
2. DUCT OPEN TO PLENUM.
3. PROVIDE SIDE SHIELD TO DEFLECT HEAT AWAY FROM WALL.
4. MOTORIZED DAMPER. INTERLOCK WITH EF-3-2. DAMPER TO OPEN WHEN FAN SPEED EXCEEDS 10% (ADJ).
5. TEMPERATURE SENSOR TO CONTROL GUH INDICATED ON PLAN. GUH TO RUN WHEN TEMP. SENSOR IS <40 DEG. F. (ADJ).

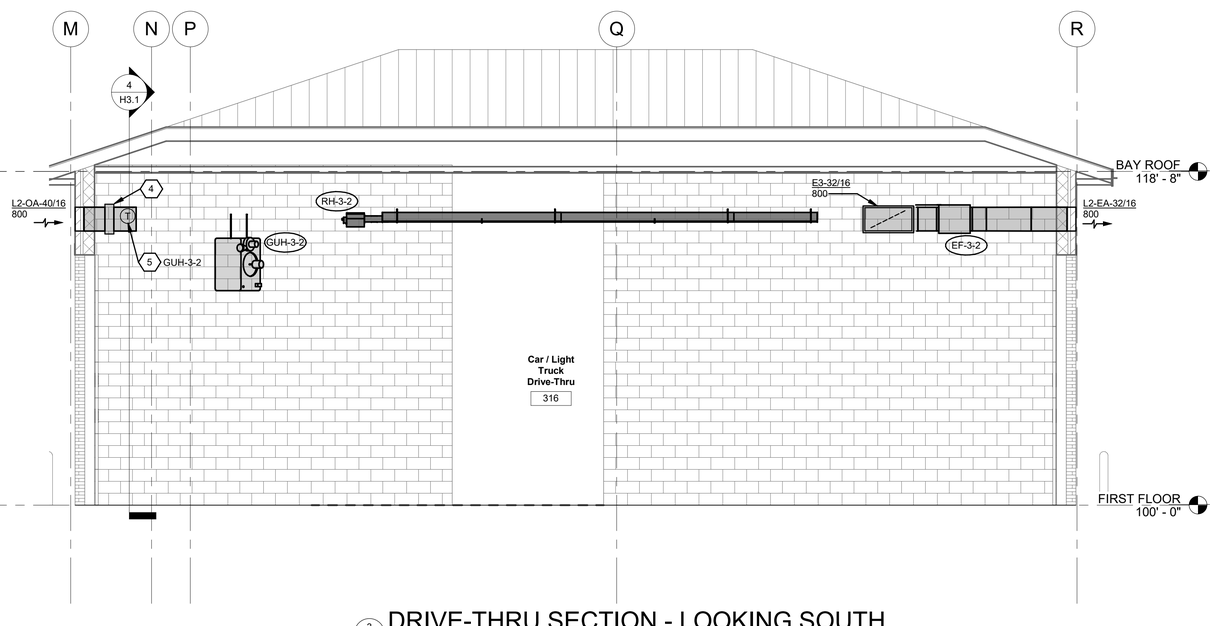

3 H3.1 DRIVE-THRU SECTION - LOOKING SOUTH

0 2 4 8 12 16 20

SCALE: 1/4"=1'-0"

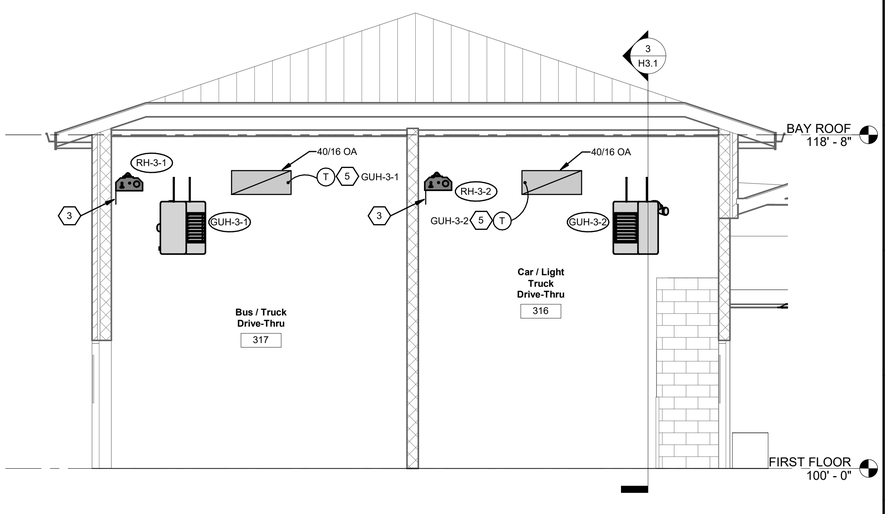

4 H3.1 DRIVE-THRU SECTION - LOOKING WEST

0 2 4 8 12 16 20

SCALE: 1/4"=1'-0"

NAUMAN & ZELINSKI LLC.
204 S. Ludlow Street Suite 400 Dayton, Ohio 45402
Phone: (937) 223-3821 • Fax: (937) 223-3849

App Architecture
creative focused design
615 Woodside Drive, Englewood, Ohio 45322
T 937.836.8898 F 937.832.3696
www.app-arch.com

MIAMI COUNTY ONE STOP CENTER
BOARD OF COMMISSIONERS FOR MIAMI COUNTY, OHIO
BARNHART ROAD, TROY, OHIO 45373

ISSUE

NO.	DATE	DESCRIPTION
1	04/08/2022	FOR CONSTRUCTION

DATE	04/08/22
JOB NO.	3923.00
DRAWN	RS
CHECKED	JDZ

COPYRIGHT © 2022 - App Architecture, Inc.

TITLE
SECTIONS

SHEET NO.
H3.1

4/8/2022 1:20:43 PM

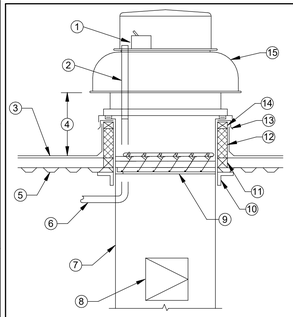

1. DISCONNECT SWITCH BY FAN MANUFACTURER.
2. WIRING CONDUIT CHASE BY FAN MANUFACTURER.
3. FLASHING, CANT STRIPS (IF REQUIRED), ROOFING MATERIAL & ROOF CONSTRUCTION BY ROOFING CONTRACTOR.
4. 18" MINIMUM.
5. ROOF DECK.
6. ELECTRIC CONDUIT BY E.C., SEAL DUCT PENETRATION.
7. EXHAUST DUCT-REFER TO PLANS/SCHEDULE FOR SIZE.
8. ACCESS DOOR.
9. BACKDRAFT DAMPER.
10. DUCT SUPPORT FRAMING ALL AROUND BY M.C. WHERE REQUIRED.
11. WOOD BLOCKING BY M.C.
12. CURB MINIMUM OF 14" ABOVE ROOF.
13. PREFABRICATED ROOF CURB.
14. SECURE FAN TO CURB MINIMUM 2 LOCATIONS PER SIDE WITH 3#8" LAG BOLTS MINIMUM.
15. DOWNBLAST CENTRIFUGAL EXHAUST FAN. REFER TO PLANS FOR CAPACITY.

EF- 1-1,2,3-3,4,5,6-1,6-2

1 ROOF MOUNTED EXHAUST FAN DETAIL — N.T.S. — **DOWNBLAST TYPE**

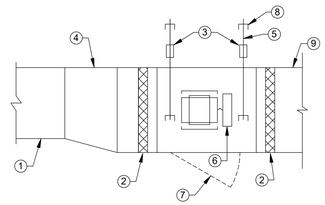

1. EXHAUST DUCT
2. FLEXIBLE DUCT CONNECTION VIBRATION ISOLATORS
3. VIBRATION ISOLATORS
4. TRANSITION TO EXHAUST FAN INLET SIZE
5. THREADED ROD
6. BELT GUARD
7. ACCESS DOOR
8. STEEL CHANNEL. ATTACH TO STRUCTURE
9. DISCHARGE DUCT IS SAME SIZE AS FAN OUTLET

EF- 1-2,3-1,3-2

2 INLINE EXHAUST FAN — N.T.S. — **EXTERIOR WALL OUTLET**

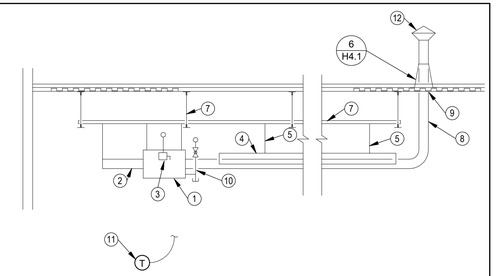

1. RADIANT HEATER BURNER CONTROL BOX.
2. 4"∅ INSULATED SINGLE WALL GALVANIZED COMBUSTION AIR DUCT. REFER TO SCHEDULE.
3. DISCONNECT SWITCH BY E.C.
4. BURNER REFLECTOR.
5. CHAIN HANGER. (TYP.)
6. ROOF STRUCTURE.
7. PROVIDE UNISTRUT CHANNELS TO SPAN STRUCTURAL ELEMENTS.
8. 4"∅ TYPE B DOUBLE WALL GAS VENT.
9. S.S. FLASHING CONE. SEAL PENETRATION THRU ROOF WATERTIGHT.
10. GAS PIPE, VALVE & DIRT LEG & UNION BY P.C.
11. WALL MOUNTED THERMOSTAT BY H.C. REFER TO PLAN FOR MOUNTING LOCATION.
12. FLUE VENT CAP.

3 RADIANT HEATER — N.T.S

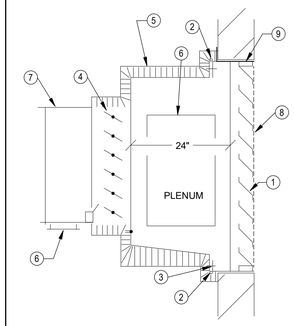

1. FRESH AIR, EXHAUST OR VENT AIR LOUVER. SEE AIR DEVICE SCHEDULE.
2. PLIABLE CAULK ALL FOUR SIDES.
3. FLANGE CONNECTION TO WALL.
4. BACKCHECK MOTORIZED OR AUTO. DDC DAMPER. SEE PLANS.
5. INSULATION.
6. ACCESS DOOR.
7. SHEETMETAL EXHAUST, FRESH AIR OR VENT AIR DUCT.
8. BIRDSCREEN.
9. STEEL LINTEL BY G.C.

4 WALL LOUVER — N.T.S.

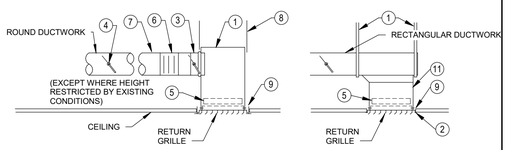

1. PLENUM - SIZE TO MATCH GRILLE. PAINT INTERIOR OF PLENUM FLAT BLACK.
2. EXHAUST/RETURN GRILLE FRAME TO MATCH CEILING CONDITION.
3. SPIN-IN FITTING WITH BALANCING DAMPER, USE FOR ALL ACCESSIBLE CEILINGS.
4. PROVIDE REMOTE BALANCING DAMPER IN BRANCH DUCT ABOVE ACCESSIBLE CEILING FOR EACH GRILLE WHERE GRILLE IS INSTALLED ABOVE INACCESSIBLE CEILING (PREFERRED).
5. PROVIDE BALANCING DAMPER AT DEVICE ONLY WHERE DUCT MOUNTED DAMPER CANNOT BE PROVIDED DUE TO INACCESSIBLE CEILING.
6. FLEXIBLE DUCT ACCEPTABLE ABOVE ACCESSIBLE CEILING ONLY. MAX. 2 FT., REFER TO CEILING DIFFUSER DETAIL FOR INSTALLATION REQUIREMENTS.
7. SHEETMETAL DUCT.
8. SUPPORT PLENUM FROM STRUCTURE WITH DUCT STRAP HANGERS.
9. FASTEN SHEETMETAL PLENUM OR DUCT TO AIR DEVICE, EACH SIDE.
10. DUCT STRAP HANGER.
11. VIEWABLE PORTION OF DUCT INTERIOR TO BE PAINTED FLAT BLACK.

5 EXHAUST/RETURN GRILLE - DUCTED — N.T.S.

ALL EXTERIOR SURFACES OF FLUE & ACCESSORIES SHALL BE PROVIDED WITH POWDER COAT FINISH. COLOR SELECTED BY ARCHITECT.

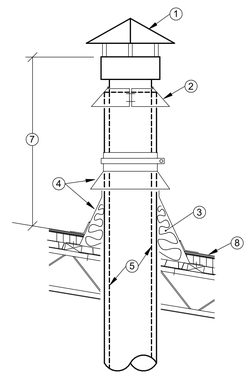

1. RAIN CAP.
2. STORM COLLAR.
3. INSULATION.
4. FLASHING CONE & STORM COLLAR. SEE DETAIL.
5. STAINLESS STEEL DOUBLE WALL FLUE VENT. SEE SPECIFICATIONS.
6. FROM RADIANT HEATER.
7. TOP OF FLUE OUTLET IS 4'-6" ABOVE 2/12 ROOF.
8. ROOF. SEE ARCH. DRAWINGS.
9. STEEL JOIST.

NOTE: PROVIDE VERTICAL AND HORIZONTAL SUPPORTS.

6 DOUBLE WALL RADIANT HEATER FLUE — N.T.S.

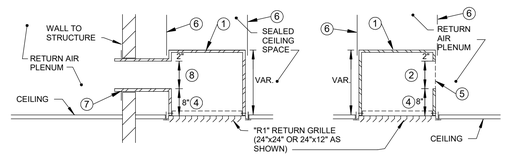

1. 24"x24" OR 24"x12" NOMINAL SHEET METAL PLENUM LINED WITH 1/2" BLACK FIBERGLASS DUCT LINER.
2. 24"x12" GRILLE SIZE - 6" HIGH x FULL WIDTH
   24"x24" GRILLE SIZE - 12" HIGH x FULL WIDTH
3. EXTEND LINED RETURN AIR DUCT THRU WALL TO RETURN AIR PLENUM WHERE REQUIRED FOR FULL HEIGHT WALLS.
4. MINIMUM HEIGHT, EXCEPT WHERE HEIGHT IS RESTRICTED BY EXISTING CONDITIONS.
5. OPEN TO PLENUM ABOVE CEILING.
6. SUPPORT PLENUM FROM STRUCTURE WITH DUCT STRAP HANGERS.
7. FRAME OPENING THROUGH WALL AS REQUIRED AND SEAL WALL PENETRATION SMOKE TIGHT.
8. 24"x12" GRILLE SIZE - 6" HIGH x 20" WIDTH
   24"x24" GRILLE SIZE - 12" HIGH x 20" WIDTH

7 TRANSFER AIR GRILLE/PLENUM — N.T.S.

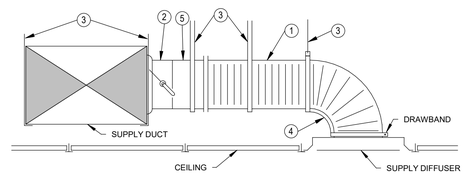

1. FLEXIBLE DUCT SAME DIAMETER AS DIFFUSER INLET (ABOVE ACCESSIBLE CEILING ONLY USE SHEETMETAL ONLY ABOVE INACCESSIBLE CEILING). 7 FT. MAXIMUM LENGTH. STRETCH TO MINIMUM 90% OF FULLY EXTENDED LENGTH. ADDITIONAL HANGER REQUIRED IF DUCT LENGTH EXCEEDS 4 FT.
2. SPIN-IN BRANCH TAP FITTING, STRAIGHT SIDE, WITH MANUAL DAMPER. DAMPER SHAFT IN HORIZONTAL. INTEGRAL INSULATION GUARD SLEEVE REQUIRED FOR TAP FITTING TO MAIN DUCT WITH INTERNAL INSULATION.
3. DUCT STRAP HANGER. ATTACH TO STRUCTURE. PER SMACNA.
4. 90 DEGREE FLEXIBLE ELBOW SUPPORT BY FLEXRIGHT, FLEXFLOW OR SMARTFLOW. PROVIDE WITH DRAWBANDS, UL-2043 RATING.
5. SHEETMETAL DUCT, SAME DIAMETER AS DIFFUSER INLET. LONGITUDINAL OR SPIRAL LOCK SEAM, 0.50" S.P. CONSTRUCTION. PROVIDE EXTERIOR INSULATION, 1.5" THICKNESS, 0.75" DENSITY FIBERGLASS WITH FOIL/KRAFT PAPER JACKET.

8 CEILING DIFFUSER — N.T.S.

NAUMAN & ZELINSKI LLC.
204 S. Ludlow Street Suite 400 Dayton, Ohio 45402
Phone: (937) 223-3621 - Fax: (937) 223-3849

App Architecture
creative focused design
615 Woodside Drive, Englewood, Ohio 45322
T 937.836.8898 F 937.832.3696
www.app-arch.com

STATE OF OHIO
JEFFREY D. ZELINSKI
63822
REGISTERED
PROFESSIONAL ENGINEER

MIAMI COUNTY ONE STOP CENTER
BOARD OF COMMISSIONERS FOR MIAMI COUNTY, OHIO
BARNHART ROAD, TROY, OHIO 45373

ISSUE

NO.	DATE	DESCRIPTION
1	04/08/2022	FOR CONSTRUCTION

DATE	04/08/22
JOB NO.	3923.00
DRAWN	RS
CHECKED	JDZ

COPYRIGHT © 2022 - App Architecture, Inc.

TITLE
DETAILS

SHEET NO.
H4.1

4/8/2022 1:20:44 PM

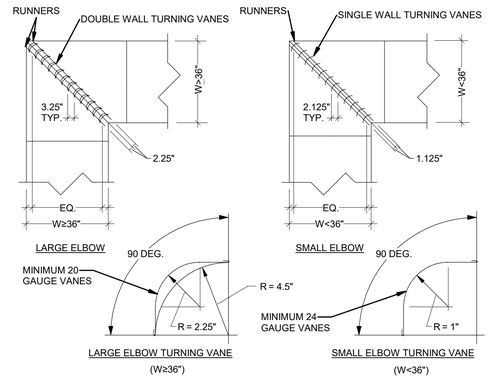

NOTES:
1. ALL VANES SHALL BE SECURE AND STABLE IN OPERATING POSITION.
2. VANES SHALL BE SECURELY FASTENED TO RUNNERS.
3. INSTALL VANES IN SECTIONS OR USE TIE RODS TO LIMIT THE UNBRACED LENGTH TO 60".
4. VANES ARE NOT TO HAVE TRAILING EDGES.

1 RECTANGULAR 90° MITERED ELBOW
N.T.S.

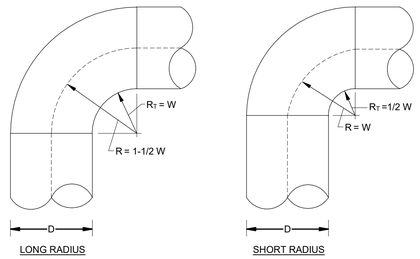

NOTES:
1. DIMENSION D AS SHOWN ON THE DRAWINGS.
2. USE LONG RADIUS ELBOWS ON ALL DUCTWORK SYSTEMS WHERE POSSIBLE OR UNLESS OTHERWISE INDICATED.
3. ONLY WHEN IT IS IMPOSSIBLE TO USE LONG RADIUS ELBOWS, USE LARGEST POSSIBLE RADIUS WITH A MINIMUM RADIUS EQUAL TO THAT OF A SHORT RADIUS ELBOW.

2 ROUND 90° RADIUS ELBOW
N.T.S.

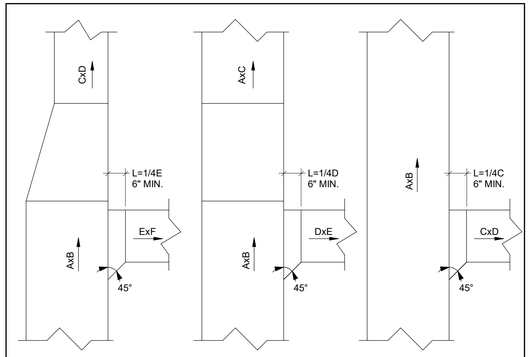

NOTES:
1. DIMENSIONS A, B, C, D, E, AND F AS INDICATED ON THE DRAWINGS.
2. TRANSITIONS MAY BE FLAT ON TOP, FLAT ON BOTTOM OR CONCENTRIC.
3. SAME FOR RETURN AND EXHAUST DUCTS EXCEPT AIRFLOW IS REVERSED.
4. TAP HEIGHT DIMENSION SHOULD BE 2" SMALLER THAN MAIN DUCT HEIGHT.

3 RECTANGULAR 90° SIDE TAP
N.T.S.

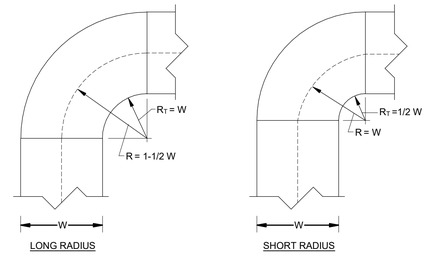

NOTES:
1. USE ONLY LONG RADIUS ELBOWS ON KITCHEN HOOD EXHAUST DUCTWORK.
2. USE LONG RADIUS ELBOWS ON ALL DUCTWORK SYSTEMS WHERE POSSIBLE OR UNLESS OTHERWISE INDICATED.
3. ONLY WHEN IT IS IMPOSSIBLE TO USE LONG RADIUS ELBOWS, USE LARGEST POSSIBLE RADIUS WITH A MINIMUM RADIUS EQUAL TO THAT OF A SHORT RADIUS ELBOW.

NOTE:
ELBOWS WITH 90 DEGREE SQUARE ON INSIDE RADIUS ARE NOT ACCEPTABLE.

4 RECTANGULAR 90° RADIUS ELBOW
N.T.S.

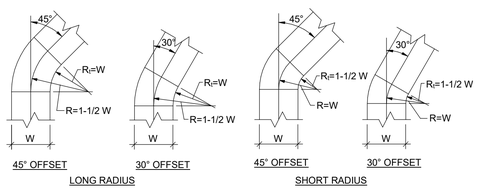

NOTES:
1. USE ONLY LONG RADIUS ELBOWS ON KITCHEN HOOD AND DISHWASHER HOOD EXHAUST DUCTWORK.
2. USE LONG RADIUS ELBOWS ON ALL DUCTWORK SYSTEMS WHERE POSSIBLE OR UNLESS OTHERWISE INDICATED.
3. ONLY WHEN IT IS IMPOSSIBLE TO USE LONG RADIUS ELBOWS, USE LARGEST POSSIBLE RADIUS WITH A MINIMUM RADIUS EQUAL TO THAT OF A SHORT RADIUS ELBOW.

5 RECTANGULAR 45° & 30° RADIUS ELBOW
N.T.S.

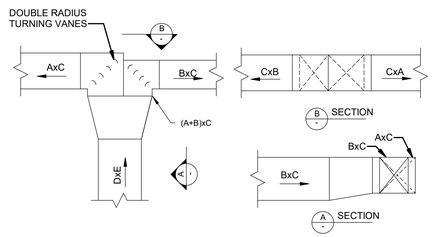

NOTES:
1. DIMENSIONS A, B, C, D, AND E AS INDICATED ON DRAWINGS.
2. TRANSITIONS SHOWN CONCENTRIC IN PLAN, MAY BE FLAT ON EITHER SIDE. TRANSITION SHOWN FLAT ON TOP IN SECTION, MAY BE FLAT ON BOTTOM OR CONCENTRIC. TRANSITION DUCT AS FIELD CONDITIONS DICTATE.
3. SAME FOR RETURN AND EXHAUST DUCTS EXCEPT AIRFLOW IS REVERSED.

6 RECTANGULAR TEE SQUARE ELBOW
N.T.S.

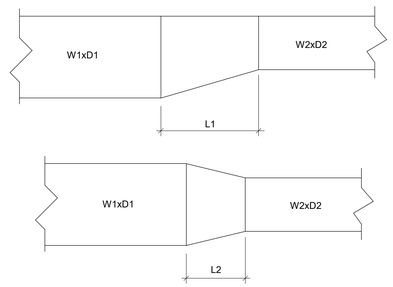

NOTES:
1. DIMENSIONS W1, W2, D1, AND D2 AS INDICATED ON THE DRAWINGS.
2. FOR LOW VELOCITY DUCTWORK (1800 FPM OR LESS)
   L1 = 4 x (W1-W2) OR 4 x (D1-D2) WHICHEVER IS GREATER.
   L2 = 2 x (W1-W2) OR 2 x (D1-D2) WHICHEVER IS GREATER.
3. FOR MEDIUM AND HIGH VELOCITY DUCTWORK (OVER 1800 FPM)
   L1 = 7 x (W1-W2) OR 7 x (D1-D2) WHICHEVER IS GREATER.
   L2 = 3.5 x (W1-W2) OR 3.5 x (D1-D2) WHICHEVER IS GREATER.

7 RECTANGULAR TRANSITION
N.T.S.

NAUMAN & ZELINSKI LLC.
204 S. Ludlow Street Suite 400 Dayton, Ohio 45402
Phone: (937) 223-3621 - Fax: (937) 223-3849

App Architecture
creative focused design
615 Woodside Drive, Englewood, Ohio 45322
T 937.836.8898 F 937.832.3696
www.app-arch.com

STATE OF OHIO
JEFFREY D. ZELINSKI
63822
REGISTERED
PROFESSIONAL ENGINEER

MIAMI COUNTY ONE STOP CENTER
BOARD OF COMMISSIONERS FOR MIAMI COUNTY, OHIO
BARNHART ROAD, TROY, OHIO 45373

ISSUE

NO.	DATE	DESCRIPTION
1	04/08/2022	FOR CONSTRUCTION

DATE	04/08/22
JOB NO.	3923.00
DRAWN	RS
CHECKED	JDZ

COPYRIGHT © 2022 - App Architecture, Inc.

TITLE
DUCT DETAILS

SHEET NO.
H4.2

4/8/2022 1:20:45 PM

DUCT INSULATION SCHEDULE

QUALITY ASSURANCE
INSULATION SHALL MEET NFPA 255, 25 FLAME SPREAD & 50 SMOKE DEVELOPMENT, UL 181, NFPA 90A/90B, ASTM 1136, AND ASTM E84.

MINIMUM INSULATION THICKNESS SHALL COMPLY WITH ASHRAE 90.1-2010.

PRODUCTS
- PROTECTIVE METAL JACKET COVERS - 0.016" ALUMINUM.

EXECUTION
- INSULATION SHALL BE INSTALLED IN STRICT ACCORDANCE WITH MANUFACTURER'S RECOMMENDATIONS.

- DUCTWORK SHALL BE SEALED PRIOR TO INSTALLATION OF INSULATION.

- ALL EXTERIOR DUCT INSULATION SHALL BE SEALED WATERTIGHT.

- REINSULATE DUCTWORK WHERE EXISTING INSULATION IS DAMAGED IN CONNECTION OF NEW DUCTWORK.

- ALL INSULATION VAPOR BARRIERS SHALL BE MAINTAINED.

- ADHESIVE SHALL BE APPLIED TO AID INSTALLATION.

- REQUIRED INTERNAL DUCT LINING IS INDICATED ON DRAWINGS. LINED DUCTWORK NEED NOT BE FURTHER INSULATED.

- DUCT COILS, REHEAT BOX COILS, CONTROL DAMPER, FIRE DAMPERS & SMOKE DAMPERS SHALL BE INSULATED IF SYSTEM INSULATION IS INDICATED.

- ALL INSULATION SHALL BE MARKED WITH MANUFACTURER, "R" VALUE, FLAME SPREAD & SMOKE DEVELOPMENT.

SYSTEM	INSULATION THICKNESS	TYPE	LOCATION	NOTES
SUPPLY AIR DUCT	1.5"	1	CONCEALED	
SUPPLY AIR DUCT	2"	2	EXPOSED	
SUPPLY AIR DUCT	2"	1	IN ATTIC	
OUTDOOR AIR DUCT & PLENUMS	1.5"	1	CONCEALED	
OUTDOOR AIR DUCT & PLENUMS	2"	2	EXPOSED	
RETURN AIR DUCT	-	-	CONCEALED	
RETURN AIR DUCT	-	-	EXPOSED	
RETURN AIR DUCT	-	-	IN ATTIC	
RELIEF AIR DUCT & PLENUMS	-	-	CONCEALED	
RELIEF AIR DUCT & PLENUMS	-	-	EXPOSED	
RELIEF AIR DUCT & PLENUMS	-	-	IN ATTIC	
EXHAUST AIR DUCT & PLENUMS	-	-	CONCEALED	
EXHAUST AIR DUCT & PLENUMS	-	-	EXPOSED	
EXHAUST AIR DUCT & PLENUMS	-	-	IN ATTIC	
LINED SUPPLY AIR DUCT	1"	3	CONCEALED & EXPOSED	
LINED RETURN/TRANSFER AIR DUCT	1"	3	CONCEALED & EXPOSED	

TYPE	BASIS OF DESIGN	APPROVED EQUALS	DESCRIPTION
1	OWENS-CORNING SOFTR TYPE 75	KNAUF JM CERTAIN TEED	MATERIAL FIBERGLASS DUCT WRAP ON DUCT K = 0.30 @ 75 DEG. F. DENSITY - 0.75 PCF JACKET - FOIL REINFORCED JOINTS - OVERLAPPING STAPLE ALL JOINTS AT 6" CENTERS. FASTENERS - MECHANICAL ON 24" & WIDER DUCT. ADHESIVE - NONE TAPE - 3" WIDE
2	OWENS-CORNING TYPE 703	KNAUF JM CERTAIN TEED	MATERIAL FIBERGLASS BOARD ON DUCT K = 0.23 @ 75 DEG. F. DENSITY - 3.0 PCF JACKET - ASJ JOINTS - BUTT FASTENERS - METAL PINS & CLIPS ON 12" CENTERS ADHESIVE - NONE TAPE - 3" WIDE VAPOR PATCHED
3	OWENS-CORNING QUIET R TYPE 300	KNAUF JM CERTAIN TEED	MATERIAL FIBERGLASS BOARD LINER K = 0.23 @ 75 DEG. F. DENSITY - 3.0 PCF JACKET - NONE JOINTS - BUTT FASTENERS - METAL PINS & CLIPS ON 12" CENTERS ADHESIVE - NONE TAPE - NONE

DUCT CONSTRUCTION AND SEALING

QUALITY ASSURANCE
- COMPLY WITH GENERAL WELDING PERSONNEL & PROCEDURES UNDER AWS D1.1/D1.1M, AWS D1.2/D1.2M & AWS D9.1/D9.1M.
- COMPLY WITH GENERAL DUCT CONSTRUCTION STANDARDS UNDER SMACNA HVAC DUCT CONSTRUCTION STANDARDS METAL AND FLEXIBLE - THIRD EDITION AND MOST CURRENT VERSION OF APPLICABLE ASHRAE 90.1 SECTION 6.4.4 AND ASHRAE 62.1 SECTIONS 5 & 7.
- COMPLY WITH SEISMIC REQUIREMENTS PRESCRIBED UNDER SMACNA DUCT CONSTRUCTION STANDARDS - METAL AND FLEXIBLE THIRD EDITION & ASCE/SEI 7.

PRODUCTS
ROUND OR FLAT OVAL SINGLE WALL DUCTWORK - 2" S.P. AND HIGHER
- CONTINUOUS HELICAL (SPIRAL) LOCK SEAM CONSTRUCTION.
- SLIP CONNECTIONS; GASKETED FLANGES ARE NOT ACCEPTABLE.
- USE 45 DEG. LATERAL TEES WHEREVER POSSIBLE.
- 90 DEG. TEES SHALL BE CONICAL SPIN-IN TYPE.
- DIE STAMPED ELBOWS, r/D = 1.5 (MIN.)
- RADIUSED, ANGLED (15° MAX.) OR MITERED (15° MAX.) OFFSETS.
- CONCENTRIC TRANSITIONS, 0 = 45° MAX.
- ECCENTRIC TRANSITIONS, 0 = 30° MAX.

ROUND OR FLAT OVAL DOUBLE WALL DUCTWORK - 2" S.P. AND HIGHER (SAME AS ABOVE EXCEPT:)
- INSULATION THICKNESS PER INSULATION SCHEDULE FOR INTENDED SERVICE.
- PERFORATED INNER LINER/SOLID INNER LINER.
- OUTER PRESSURE SHELL.

ROUND DUCTWORK - 1" S.P. OR LESS (SAME AS ABOVE EXCEPT:)
- LONGITUDINAL SEALED SEAM CONSTRUCTION ACCEPTABLE AT FINAL AIR DEVICE ONLY.
- STANDARD TEES ALLOWED.
- SEGMENTED ELBOWS ALLOWED.

RECTANGULAR DUCTW0RK - 2" S.P. AND HIGHER
- FLAT SLIP, STANDING DRIVE OR GASKETED FLANGE DUCT SYSTEM CONNECTIONS.
- RADIUS OR SQUARE THROAT WITH DOUBLE WALL TURNING VANES ELBOW.
- 45 DEG. ENTRY OR CONICAL SPIN-IN BRANCH CONNECTIONS.
- RADIUSED, ANGLED (15° MAX.) OR MITERED (15° MAX.) OFFSETS.
- CONCENTRIC TRANSITIONS, 0 = 45° MAX.
- ECCENTRIC TRANSITIONS, 0 = 30° MAX.
- BRANCH DUCTS SHALL BE CONICAL TEE FITTINGS.
- SQUARE THROAT, RADIUS HEEL 90° ELBOWS ARE NOT PERMITTED.

RECTANGULAR DUCTWORK - 1" S.P. OR LESS (SAME AS ABOVE EXCEPT:)
- TURNING VANES IN ELBOWS NOT REQUIRED FOR AIR VELOCITIES LESS THAN 800 FPM.
- STRAIGHT TAP AND STANDARD SPIN-IN BRANCH CONNECTIONS PERMITTED.

FLEXIBLE DUCTWORK - SUPPLY/RETURN/TRANSFER/EXHAUST
- PROVIDE MANUFACTURED DUCT SUPPORTS AT 90 DEGREE ELBOWS TO CEILING AIR DEVICES.
- FLAME SPREAD LESS THAN 25, SMOKE DEVELOPMENT LESS THAN 50.

DUCT SEALANT & GASKETS
- GALVANIZED DUCT SEALANT - WATER BASED SYNTHETIC LATEX EMULSION, GRAY IN COLOR.
- FLANGE GASKETS - BUTYL RUBBER, NEOPRENE, OR EPDM POLYMER W/ POLYISOBUTYLENE PLASTICIZER.
- ALUMINUM DUCT SEALANT - ALUMINUM SILICONE, GRAY IN COLOR.
- PVC COATED DUCT SEALANT - PVS SEALANT OR CAULK/MINERAL IMPREGNATED FIBER TYPE.

DUCT HANGER SUPPORTS
- DUCT HANGER SUPPORTS SHALL DIRECTLY ATTACH TO DUCTWORK.
- EXTERIOR DUCT INSULATION WRAP SHALL BE APPLIED OVER DUCT AND HANGER SUPPORTS.
- ANGLE OR UNISTRUT SUPPORTS SHALL BE INSULATED A MINIMUM OF 4" BEYOND DUCT BEARING POINT TO PREVENT CONDENSATION.

EXECUTION
- DRAWINGS INDICATE GENERAL LOCATION OF DUCTWORK. COORDINATE DUCT LAYOUT CAREFULLY WITH OTHER TRADES TO AVOID CONFLICT. PROVIDE OFFSETS AS REQUIRED.
- SPAN DUCTWORK FROM STRUCTURAL CONCRETE/STEEL MEMBERS OR SUPPLEMENTARY STEEL SHAPES.
- FOR EXPOSED DUCTWORK, GRIND WELDS SMOOTH AND POLISH AND TRIM SEALANTS FLUSH WITH DUCT SURFACES.
- PROTECT DUCTWORK DURING CONSTRUCTION AND CLEAN PRIOR TO SYSTEM OPERATION.
- ROUTE DUCTWORK TO AVOID PASSING THRU TRANSFORMER VAULTS OR ABOVE ELECTRICAL SWITCHGEAR OR PANELBOARDS PER NEC REQUIREMENTS.
- SEAL DUCTS ACCORDING TO SMACNA SEAL CLASS NOTED IN SCHEDULE.
- SYSTEMS OPERATING AT 3" S.P. OR HIGHER AND ALL EXTERIOR DUCTWORK SHALL REQUIRE DUCT PRESSURE TESTING.
- WET DUCT SYSTEMS SHALL BE PITCHED FOR DRAINAGE. PROVIDE TRAPPED DRAIN AT SYSTEM LOW POINTS AND PIPE TO LOCAL DRAIN POINT.

DUCTWORK SYSTEM SCHEDULE

DUCTWORK SYSTEM	LOCATION	MATERIAL	SMACNA CLASS.		NOTES
			S.P. CONSTR.	SEAL CLASS	
RETURN AIR	CONCEALED	G1	-2"	C	
RETURN AIR	EXPOSED	G1, G2	-2"	C	2
EXHAUST AIR	CONCEALED	G1	-2"	C	
EXHAUST AIR	EXPOSED	G1, G2	-2"	C	2
AIR TRANSFER	ALL	G1	-1"	NOT REQ'D	
SUPPLY AIR - CONSTANT VOLUME	CONCEALED	G1	+3"	B	
SUPPLY AIR - CONSTANT VOLUME	EXTERIOR	F1	+3"	B	
FLEXIBLE DUCTWORK - SUPPLY	CONCEALED OR UNCONDITIONED	C1	+10" -5"	N.A.	
FLEXIBLE DUCTWORK - RET/EXH./TRANSFER	CONCEALED	C2	+10" -5"	N.A.	
EXHAUST FLUE	ALL	P2	+4"	A	

DUCTWORK MATERIALS SCHEDULE

TYPE	MATERIAL	DESCRIPTION
C1	CHLORINATED POLYETHYLENE	BLACK INNER FABRIC WITH GALVANIZED STEEL HELIX REINFORICING, R = 6.0 (MIN.) FIBERGLASS INSULATION, REINFORCED METALIZED VAPOR BARRIER, 0.05 PERM, UL 181, CLASS 1 DUCT, MEET NFPA 90A & 90B, 25/50 FLAME/SMOKE SPREAD
C2	CHLORINATED POLYETHYLENE	BLACK INNER FABRIC WITH GALVANIZED STEEL HELIX REINFORCING, R = 4.2 (MIN.) FIBERGLASS INSULATION, REINFORCED METALIZED VAPOR BARRIER, 0.05 PERM, UL 181, CLASS 1 DUCT, MEET NFPA 90A & 90B, 25/50 FLAME/SMOKE SPREAD.
F1	NON-FIBROUS CLOSED CELL	EQUAL TO THERMADUCT #0D. R = 12 (MIN.) ZERO-FIBER FOAM WITH HIGH IMPACT VINYL SHELL. COMPLIES WITH UL 723 25/50 FLAME/SMOKE RATING.
G1	GALVANIZED STEEL	24 GA. MIN., HOT DIPPED, GALVANIZED BOTH SIDES, G90 PER ASTM A653.
G2	GALVANIZED STEEL	24 GA. MIN., HOT DIPPED, HEAT TREATED GALVANNEALED BOTH SIDES PER ASTM A653, PAINT UNIFORM GRAY MATTE APPEARANCE, A40 PER ASTM A653.
P2	CHLORINATED POLYVINYL CHLORIDE	SCHEDULE 80 CPVC PIPE PER ASTM F441, SOCKET END FITTINGS PER ASTM F439, SOLVENT WELDED JOINTS.

NOTES:
1. DUCTWORK SYSTEMS ARE TO MATCH BASE MATERIALS FOR CONCEALED AND EXPOSED INSTALLATIONS.
2. FIELD PREPARE GALVANIZED DUCTWORK FOR PAINTING WITH AN ACID WASH OF VINEGAR.

NAUMAN & ZELINSKI LLC.
204 S. Ludlow Street Suite 400 Dayton, Ohio 45402
Phone: (937) 223-3821 • Fax: (937) 223-3849

App Architecture
creative focused design
615 Woodside Drive, Englewood, Ohio 45322
T 937.836.8898 F 937.832.3696
www.app-arch.com

STATE OF OHIO
JEFFREY D. ZELINSKI
63822
REGISTERED
PROFESSIONAL ENGINEER

MIAMI COUNTY ONE STOP CENTER
BOARD OF COMMISSIONERS FOR MIAMI COUNTY, OHIO
BARNHART ROAD, TROY, OHIO 45373

ISSUE

NO.	DATE	DESCRIPTION
1	04/08/2022	FOR CONSTRUCTION

DATE	04/08/22
JOB NO.	3923.00
DRAWN	RS
CHECKED	JDZ

COPYRIGHT © 2022 - App Architecture, Inc.

TITLE
DUCT SCHEDULES

SHEET NO.
H4.3

4/8/2022 1:20:46 PM

Building:	Miami County One Stop
System Tag/Name:	RTU-1 - Common Area
Operating Condition Description:	
Units (select from pull-down list)	IP

Inputs for System	Name	Units	System (w/o diversity)	Diversity	System (w/ diversity)
Floor area served by system	As	sf	1,427		
Population of area served by system	Ps	P	54	D 100%	54
Design primary supply fan airflow rate	Vpsd	cfm	1,675	100%	1,675
OA req'd per unit area for system (Weighted average)	Ras	cfm/sf	0.05		
OA req'd per person for system area (Weighted average)	Rps	cfm/p	5.0		
Percent increase in Vbz over minimum required			0%		

Inputs for Potentially Critical zones	Name	Units	Potentially Critical Zones				
Zone Name	*Zone title turns purple italic for critical zone(s)*		Central Data	Womens	Mens	*Lobby*	Entry Vestibule
Zone Tag			104	103	102	*101*	100
Occupancy Category		Select from pull-down list:	Electrical equipment rooms	Restroom	Restroom	Lobbies	Lobbies
Floor Area of zone	Az	sf	55	60	61	1132	99
Design population of zone	Pz	P (default value listed; may be overridden)	0	0	0	54	0
Design total supply to zone (primary plus local recirculated)	Vdzd	cfm	150	0	0	1400	125
Induction Terminal Unit, Dual Fan Dual Duct or Transfer Fan?		Select from pull-down list or leave blank if N/A:					
Frac. of local recirc. air that is representative of system RA	Er						
Inputs for Operating Condition Analyzed							
Percent of total design airflow rate at conditioned analyzed	Ds	% (System: 100%)	100%	100%	100%	100%	100%
Air distribution type at conditioned analyzed		Select from pull-down list:	CSCRH	CSCRH	CSCRH	CSCRH	CSCRH
Zone air distribution effectiveness at conditioned analyzed	Ez		0.80	0.80	0.80	0.80	0.80
Primary air fraction of supply air at conditioned analyzed	Ep						

Results	Name	Units	Value
System Ventilation Efficiency	Ev		0.91
Outdoor air intake required for system	Vot	cfm	385
Outdoor air per unit floor area	Vot/As	cfm/sf	0.27
Outdoor air per person served by system (including diversity)	Vot/Ps	cfm/p	7.1
Outdoor air as a % of design primary supply air	Ypd	%	23%

RTU-1 385 CFM O.A. REQ'D, 400 CFM O.A. PROVIDED

Building:	Miami County One Stop
System Tag/Name:	RTU-2 - BMV License
Operating Condition Description:	
Units (select from pull-down list)	IP

Inputs for System	Name	Units	System (w/o diversity)	Diversity	System (w/ diversity)
Floor area served by system	As	sf	1,750		
Population of area served by system	Ps	P	36	D 100%	36
Design primary supply fan airflow rate	Vpsd	cfm	2,125	100%	2,125
OA req'd per unit area for system (Weighted average)	Ras	cfm/sf	0.07		
OA req'd per person for system area (Weighted average)	Rps	cfm/p	5.0		
Percent increase in Vbz over minimum required			0%		

Inputs for Potentially Critical zones	Name	Units	Potentially Critical Zones					
Zone Name	*Zone title turns purple italic for critical zone(s)*		Office	*Break Room*	Storage	Waiting	Employee Area	Toilet
Zone Tag			203	*204*	205	200	202	206
Occupancy Category		Select from pull-down list:	Office Space	Break rooms	Storage rooms	Lobbies	Reception areas	Restroom
Floor Area of zone	Az	sf	178	177	201	647	413	63
Design population of zone	Pz	P (default value listed; may be overridden)	1	4	0	26	5	0
Design total supply to zone (primary plus local recirculated)	Vdzd	cfm	150	229	225	1050	475	0
Induction Terminal Unit, Dual Fan Dual Duct or Transfer Fan?		Select from pull-down list or leave blank if N/A:						
Frac. of local recirc. air that is representative of system RA	Er							
Inputs for Operating Condition Analyzed								
Percent of total design airflow rate at conditioned analyzed	Ds	% (System: 100%)	100%	100%	100%	100%	100%	100%
Air distribution type at conditioned analyzed		Select from pull-down list:	CSCRH	CSCRH	CSCRH	CSCRH	CSCRH	CSCRH
Zone air distribution effectiveness at conditioned analyzed	Ez		0.80	0.80	0.80	0.80	0.80	0.80
Primary air fraction of supply air at conditioned analyzed	Ep							

Results	Name	Units	Value
System Ventilation Efficiency	Ev		0.92
Outdoor air intake required for system	Vot	cfm	339
Outdoor air per unit floor area	Vot/As	cfm/sf	0.19
Outdoor air per person served by system (including diversity)	Vot/Ps	cfm/p	9.4
Outdoor air as a % of design primary supply air	Ypd	%	16%

RTU-2 339 CFM O.A. REQ'D, 350 CFM O.A. PROVIDED

Building:	Miami County One Stop
System Tag/Name:	RTU-3 - Ohio State Patrol
Operating Condition Description:	
Units (select from pull-down list)	IP

Inputs for System	Name	Units	System (w/o diversity)	Diversity	System (w/ diversity)
Floor area served by system	As	sf	2,307		
Population of area served by system	Ps	P	24	D 100%	24
Design primary supply fan airflow rate	Vpsd	cfm	1,975	100%	1,975
OA req'd per unit area for system (Weighted average)	Ras	cfm/sf	0.05		
OA req'd per person for system area (Weighted average)	Rps	cfm/p	5.3		
Percent increase in Vbz over minimum required			0%		

Inputs for Potentially Critical zones	Name	Units	Potentially Critical Zones															
Zone Name	*Zone title turns purple italic for critical zone(s)*		*Waiting*	Report	Comm Room	LCS Inspection	Locker Room	Public Corridor	Gun Closet	Staff Toilet	Conference Room	Toilet Shower	Change	Admin Office	Lt Office	Sgt Office	MCES Office	Corridor
Zone Tag			*301*	312	311	310	309	300	313	314	315	308	307	303	304	305	306	302
Occupancy Category		Select from pull-down list:	Lobbies/prefunction	Office space	Office space	Office space	Locker	Corridors	Storage rooms	Restroom	Conference/meeting	Restroom	Office space	Office space	Office space	Office space	Office space	Corridors
Floor Area of zone	Az	sf	92	104	55	131	155	141	36	51	372	69	48	119	159	144	140	491
Design population of zone	Pz	P (default value listed; may be overridden)	3	4	0	1	0	0	0	0	12	0	0	1	1	1	1	0
Design total supply to zone (primary plus local recirculated)	Vdzd	cfm	125	125	75	175	175	75	25	0	450	0	50	100	150	125	125	200
Induction Terminal Unit, Dual Fan Dual Duct or Transfer Fan?		Select from pull-down list or leave blank if N/A:																
Frac. of local recirc. air that is representative of system RA	Er																	
Inputs for Operating Condition Analyzed																		
Percent of total design airflow rate at conditioned analyzed	Ds	% (System: 100%)	100%	100%	100%	100%	100%	100%	100%	100%	100%	100%	100%	100%	100%	100%	100%	100%
Air distribution type at conditioned analyzed		Select from pull-down list:	CSCRH	CSCRH	CSCRH	CSCRH	CSCRH	CSCRH	CSCRH	CSCRH	CSCRH	CSCRH	CSCRH	CSCRH	CSCRH	CSCRH	CSCRH	CSCRH
Zone air distribution effectiveness at conditioned analyzed	Ez		0.80	0.80	0.80	0.80	0.80	0.80	0.80	0.80	0.80	0.80	0.80	0.80	0.80	0.80	0.80	0.80
Primary air fraction of supply air at conditioned analyzed	Ep																	

Results	Name	Units	Value
System Ventilation Efficiency	Ev		0.85
Outdoor air intake required for system	Vot	cfm	297
Outdoor air per unit floor area	Vot/As	cfm/sf	0.13
Outdoor air per person served by system (including diversity)	Vot/Ps	cfm/p	12.4
Outdoor air as a % of design primary supply air	Ypd	%	15%

RTU-3 297 CFM O.A. REQ'D, 300 CFM O.A. PROVIDED

Building:	Miami County One Stop
System Tag/Name:	RTU-4 - BMV Drivers Exam
Operating Condition Description:	
Units (select from pull-down list)	IP

Inputs for System	Name	Units	System (w/o diversity)	Diversity	System (w/ diversity)
Floor area served by system	As	sf	954		
Population of area served by system	Ps	P	19	D 100%	19
Design primary supply fan airflow rate	Vpsd	cfm	1,150	100%	1,150
OA req'd per unit area for system (Weighted average)	Ras	cfm/sf	0.07		
OA req'd per person for system area (Weighted average)	Rps	cfm/p	5.0		
Percent increase in Vbz over minimum required			0%		

Inputs for Potentially Critical zones	Name	Units	Potentially Critical Zones				
Zone Name	*Zone title turns purple italic for critical zone(s)*		Storage	Toilet	Break Room	*Work Stations*	Waiting
Zone Tag			402	403	405	*401*	400
Occupancy Category		Select from pull-down list:	Storage rooms	Restroom	Break rooms	Office space	Lobbies
Floor Area of zone	Az	sf	124	57	129	157	487
Design population of zone	Pz	P (default value listed; may be overridden)	0	0	2	4	13
Design total supply to zone (primary plus local recirculated)	Vdzd	cfm	100	100	225	125	600
Induction Terminal Unit, Dual Fan Dual Duct or Transfer Fan?		Select from pull-down list or leave blank if N/A:					
Frac. of local recirc. air that is representative of system RA	Er						
Inputs for Operating Condition Analyzed							
Percent of total design airflow rate at conditioned analyzed	Ds	% (System: 100%)	100%	100%	100%	100%	100%
Air distribution type at conditioned analyzed		Select from pull-down list:	CSCRH	CSCRH	CSCRH	CSCRH	CSCRH
Zone air distribution effectiveness at conditioned analyzed	Ez		0.80	0.80	0.80	0.80	0.80
Primary air fraction of supply air at conditioned analyzed	Ep						

Results	Name	Units	Value
System Ventilation Efficiency	Ev		0.85
Outdoor air intake required for system	Vot	cfm	193
Outdoor air per unit floor area	Vot/As	cfm/sf	0.20
Outdoor air per person served by system (including diversity)	Vot/Ps	cfm/p	10.2
Outdoor air as a % of design primary supply air	Ypd	%	17%

RTU-4 193 CFM O.A. REQ'D, 200 CFM O.A. PROVIDED

Building:	Miami County One Stop
System Tag/Name:	RTU-5 - Auto Title
Operating Condition Description:	
Units (select from pull-down list)	IP

Inputs for System	Name	Units	System (w/o diversity)	Diversity	System (w/ diversity)
Floor area served by system	As	sf	2,515		
Population of area served by system	Ps	P	27	D 100%	27
Design primary supply fan airflow rate	Vpsd	cfm	2,750	100%	2,750
OA req'd per unit area for system (Weighted average)	Ras	cfm/sf	0.07		
OA req'd per person for system area (Weighted average)	Rps	cfm/p	5.0		
Percent increase in Vbz over minimum required			0%		

Inputs for Potentially Critical zones	Name	Units	Potentially Critical Zones								
Zone Name	*Zone title turns purple italic for critical zone(s)*		*Storage*	Break Room	Office/Meeting Room	Office	Toilet	Records Storage	Work Stations	Dealer	Waiting
Zone Tag			*505*	506	507	508	-	503	502	501	500
Occupancy Category		Select from pull-down list:	Storage rooms	Break rooms	Office space	Office space	Restroom	Storage rooms	Office space	Office space	Lobbies
Floor Area of zone	Az	sf	256	169	199	162	36	192	1046	135	320
Design population of zone	Pz	P (default value listed; may be overridden)	0	4	6	1	0	0	7	1	8
Design total supply to zone (primary plus local recirculated)	Vdzd	cfm	150	225	250	150	0	175	1275	125	400
Induction Terminal Unit, Dual Fan Dual Duct or Transfer Fan?		Select from pull-down list or leave blank if N/A:									
Frac. of local recirc. air that is representative of system RA	Er										
Inputs for Operating Condition Analyzed											
Percent of total design airflow rate at conditioned analyzed	Ds	% (System: 100%)	100%	100%	100%	100%	100%	100%	100%	100%	100%
Air distribution type at conditioned analyzed		Select from pull-down list:	CSCRH	CSCRH	CSCRH	CSCRH	CSCRH	CSCRH	CSCRH	CSCRH	CSCRH
Zone air distribution effectiveness at conditioned analyzed	Ez		0.80	0.80	0.80	0.80	0.80	0.80	0.80	0.80	0.80
Primary air fraction of supply air at conditioned analyzed	Ep										

Results	Name	Units	Value
System Ventilation Efficiency	Ev		0.86
Outdoor air intake required for system	Vot	cfm	373
Outdoor air per unit floor area	Vot/As	cfm/sf	0.15
Outdoor air per person served by system (including diversity)	Vot/Ps	cfm/p	13.8
Outdoor air as a % of design primary supply air	Ypd	%	14%

RTU-5 373 CFM O.A. REQ'D, 400 CFM O.A. PROVIDED

Building:	Miami County One Stop
System Tag/Name:	RTU-6-2 - Department of Development - Interior
Operating Condition Description:	
Units (select from pull-down list)	IP

Inputs for System	Name	Units	System (w/o diversity)	Diversity	System (w/ diversity)
Floor area served by system	As	sf	1,745		
Population of area served by system	Ps	P	10	D 100%	10
Design primary supply fan airflow rate	Vpsd	cfm	1,250	100%	1,250
OA req'd per unit area for system (Weighted average)	Ras	cfm/sf	0.07		
OA req'd per person for system area (Weighted average)	Rps	cfm/p	5.0		
Percent increase in Vbz over minimum required			0%		

Inputs for Potentially Critical zones	Name	Units	Potentially Critical Zones									
Zone Name	*Zone title turns purple italic for critical zone(s)*		Planner	Storage	Corridor	Janitor	Account Clerk	Permit Tech/Copy Room	Common Space/Plan's Storage	Break Room	Plumbing Inspectors	Office
Zone Tag			612	619	603	621	607	606	614	615	616	620
Occupancy Category		Select from pull-down list:	Office space	Storage rooms	Corridors	Janitor	Office space	Office space	Office space	Break rooms	Office space	Office space
Floor Area of zone	Az	sf	124	75	749	57	136	136	125	147	105	91
Design population of zone	Pz	P (default value listed; may be overridden)	1	0	0	0	1	1	1	4	1	1
Design total supply to zone (primary plus local recirculated)	Vdzd	cfm	100	75	250	50	125	125	100	250	100	75
Induction Terminal Unit, Dual Fan Dual Duct or Transfer Fan?		Select from pull-down list or leave blank if N/A:										
Frac. of local recirc. air that is representative of system RA	Er											
Inputs for Operating Condition Analyzed												
Percent of total design airflow rate at conditioned analyzed	Ds	% (System: 100%)	100%	100%	100%	100%	100%	100%	100%	100%	100%	100%
Air distribution type at conditioned analyzed		Select from pull-down list:	CSCRH	CSCRH	CSCRH	CSCRH	CSCRH	CSCRH	CSCRH	CSCRH	CSCRH	CSCRH
Zone air distribution effectiveness at conditioned analyzed	Ez		0.80	0.80	0.80	0.80	0.80	0.80	0.80	0.80	0.80	0.80
Primary air fraction of supply air at conditioned analyzed	Ep											

Results	Name	Units	Value
System Ventilation Efficiency	Ev		0.91
Outdoor air intake required for system	Vot	cfm	181
Outdoor air per unit floor area	Vot/As	cfm/sf	0.10
Outdoor air per person served by system (including diversity)	Vot/Ps	cfm/p	18.1
Outdoor air as a % of design primary supply air	Ypd	%	15%

RTU-6-2 181 CFM O.A. REQ'D, 185 CFM O.A. PROVIDED

Building:	Miami County One Stop
System Tag/Name:	RTU-6-1 - Department of Development - Exterior
Operating Condition Description:	
Units (select from pull-down list)	IP

Inputs for System	Name	Units	System (w/o diversity)	Diversity	System (w/ diversity)
Floor area served by system	As	sf	2,503		
Population of area served by system	Ps	P	24	D 100%	24
Design primary supply fan airflow rate	Vpsd	cfm	2,900	100%	2,900
OA req'd per unit area for system (Weighted average)	Ras	cfm/sf	0.06		
OA req'd per person for system area (Weighted average)	Rps	cfm/p	5.0		
Percent increase in Vbz over minimum required			0%		

Inputs for Potentially Critical zones	Name	Units	Potentially Critical Zones												
Zone Name	*Zone title turns purple italic for critical zone(s)*		Directors Office	Building Official	Planning and Zoning Manager	Inspectors Office	Mechanical and Riser Room	Development Services Manager	Reception	Mens	Womens	Lobby	Storage	Vestibule	*Conference Room*
Zone Tag			609	610	613	611	700	608	605	617	618	601	602	600	*604*
Occupancy Category		Select from pull-down list:	Office space	Office space	Office space	Office space	Electrical equipment rooms	Office space	Reception areas	Restroom	Restroom	Lobbies	Storage rooms	Lobbies	Conference/meeting
Floor Area of zone	Az	sf	276	271	165	351	204	186	261	59	59	205	63	100	303
Design population of zone	Pz	P (default value listed; may be overridden)	1	1	1	6	0	1	3	0	0	1	0	0	10
Design total supply to zone (primary plus local recirculated)	Vdzd	cfm	400	350	200	425	125	225	300	0	0	250	75	125	425
Induction Terminal Unit, Dual Fan Dual Duct or Transfer Fan?		Select from pull-down list or leave blank if N/A:													
Frac. of local recirc. air that is representative of system RA	Er														
Inputs for Operating Condition Analyzed															
Percent of total design airflow rate at conditioned analyzed	Ds	% (System: 100%)	100%	100%	100%	100%	100%	100%	100%	100%	100%	100%	100%	100%	100%
Air distribution type at conditioned analyzed		Select from pull-down list:	CSCRH	CSCRH	CSCRH	CSCRH	CSCRH	CSCRH	CSCRH	CSCRH	CSCRH	CSCRH	CSCRH	CSCRH	CSCRH
Zone air distribution effectiveness at conditioned analyzed	Ez		0.80	0.80	0.80	0.80	0.80	0.80	0.80	0.80	0.80	0.80	0.80	0.80	0.80
Primary air fraction of supply air at conditioned analyzed	Ep														

Results	Name	Units	Value
System Ventilation Efficiency	Ev		0.89
Outdoor air intake required for system	Vot	cfm	299
Outdoor air per unit floor area	Vot/As	cfm/sf	0.12
Outdoor air per person served by system (including diversity)	Vot/Ps	cfm/p	12.5
Outdoor air as a % of design primary supply air	Ypd	%	10%

RTU-6-1 299 CFM O.A. REQ'D, 300 CFM O.A. PROVIDED

NAUMAN & ZELINSKI LLC.
204 S. Ludlow Street Suite 400 Dayton, Ohio 45402
Phone: (937) 223-3821 ~ Fax: (937) 223-3849

App Architecture
creative focused design
615 Woodside Drive, Englewood, Ohio 45322
T 937.836.8898 F 937.832.3696
www.app-arch.com

STATE OF OHIO — JEFFREY D. ZELINSKI — E5822 — REGISTERED PROFESSIONAL ENGINEER

MIAMI COUNTY ONE STOP CENTER

BOARD OF COMMISSIONERS FOR MIAMI COUNTY, OHIO

BARNHART ROAD, TROY, OHIO 45373

ISSUE

NO.	DATE	DESCRIPTION
1	04/08/2022	FOR CONSTRUCTION

DATE	04/08/22
JOB NO.	3923.00
DRAWN	RS
CHECKED	JDZ

COPYRIGHT © 2022 - App Architecture, Inc.

TITLE
VENTILATION CALCULATIONS

SHEET NO.
H5.1

LIGHTING FIXTURE SCHEDULE

FIXTURE SYMBOL	LUMINAIRE TYPE: LED	LUMINAIRE TYPE:	LUMINAIRE TYPE: LOW VOLTAGE	WATTS/ FIXTURE	LUMENS/ COLOR TEMP	FIXTURE VOLTAGE	MANUFACTURER & CATALOG NO.	OTHER ACCEPTABLE MANUFACTURES	DIFFUSING MEDIA	TRIM COLOR: WHITE	BLACK	ALUMINUM	BRONZE	STANDARD	SEE NOTES	MOUNTED S - SURFACE. R - RECESSED. SM - STEM MTD. WM - WALL MTD. C - CHAIN MTD. UC - UNDER CAB. CS - CLG. SURF.	SIZE: WIDTH	LENGTH	DEPTH	DIAMETER	SEE NOTES
A1	•				500 LUMENS/FT	120	VODE #707-Z2-SL-216-C-RP25-AE-1-Z-SO-35-S3-WH	LED LINEAR	MATTE WHITE LENS	•						CS	1"	18'	1"		3
B1	•			31	3200 LUMENS	120	LITHONIA #CPX 2x2 3200LA 80CRI 35K SWL MINO ZT MVOLT	COLUMBIA, DAYBRITE	SATIN WHITE LENS	•						R(GRID)	24	24	2		
C1	•			40	ADJ LUMENS	120	LITHONIA #CSS L48 ALO3 MVOLT SWW3 80 CRI	COLUMBIA, DAYBRITE	STRIP CHANNEL	•						CS	2.5	48	2.5		
D1	•			10	1300 LUMENS	120	LITHONIA #FMVTSL 24IN MVOLT 30K 90CRI BN M4	COLUMBIA, DAYBRITE	WHITE ACRYLIC				•			WM (ABOVE MIRROR)	.5	24	4		
F1	•			10	1100 LUMENS	120	LITHONIA #WF6 LED 30K40K50K 90CRI MW	GREEN CREATIVE	MATTE WHITE LENS	•						R			1	6	
F2	•			22	2000 LUMENS	120	LITHONIA #2DN6 35/20 MVOLT G210 HSG	PRESCOLITE	SEMI SPECULAR REFLECTOR	•						R			6.5	6	
F3	•			10	900 LUMENS	120	LITHONIA #WF4 ADJ LED 40K 90CRI MW	APPROVED EQUAL	ADJUSTABLE MATTE WHITE LENS	•						R			2	4	
K1	•			10	2000 LUMENS	120	LITHONIA #WDGE2 LED P2 40K 80CRI T3M MVOLT SRM AWS	HUBBELL, DAYBRITE	FULL CUTOFF WEDGE				•			WM (PER PLANS)	12	9	7		
K2	•					120	TERON #ALLW-L19.0-ZE700-120-OMG-__-40K-TP	APPROVED EQUAL					•			(9'-0"M.H.)	21	9	5.5		4
K3	•			22	600-2900 LUMENS	120	LITHONIA # TWX1-LED-ALO-40K-MVOLT-DDBTX1	HUBBELL, DAYBRITE	GLASS LENS WALL PACK				•			WM 46" M.H.	7.5	12	5		
PL1	•			125	135000 LUMENS	120	LITHONIA #DSX1 LED P4 40K T3M MVOLT SPA DDBXD/SSS 30 4G DM19AS DDBXD	BEACON (VIPER) GE (EVOLVE)	FULL CUTOFF				•			30' (5" SQ. STEEL POLE)					1,2
PL2	•			100X2	11600 LUMENS	120	LITHONIA #DSX1 LED P3 40K T3M MVOLT SPA DDBXD/SSS 30 4G DM28AS DDBXD	BEACON (VIPER) GE (EVOLVE)	FULL CUTOFF TWIN HEAD				•			30' (5" SQ. STEEL POLE)					1,2
X1	•			4.3		120	LITHONIA #LHQM LED R HO M6	COMPASS	RED LETTER ON WHITE EXIT/EM	•						WM/CS	19	8	3		
REM	•			1.2		120	LITHONIA #ELMRW LP220L DWHXDT	COMPASS	TWIN HEAD REMOTE LAMP	•						WM/CS				3	
EM	•			1		120	LITHONIA #EU2C	COMPASS	TWO LED HEADS	•						WM (7'-6")	14	4	4		

NOTES:

1. PROVIDE INTERNAL VIBRATION DAMPER IN POLE.
2. WHERE 'C' POST-SCRIPT IS SHOWN ON SITE PLAN, PROVIDE CAMERA MOUNTING ARMS, 180 DEGREE ORIENTATION, 20'-0" MOUNTING HEIGHT.
3. PROVIDE DRIVER FOR CONTINUOUS 18' RUN, SPLIT INTO MULTIPLE DRIVERS IF REQUIRED. MOUNT ABOVE ACCESSIBLE CEILING.
4. STANDARD FINISH SELECTED BY ARCHITECT.

MOTORS, STARTERS, DISCONNECTS & CONTROLS

MOTOR NUMBER	CIRCUIT NUMBER	NAMEPLATE	MOTOR CHARACTERISTICS: HP (KVA OR FLA)	120V-1PH	208V-3PH	208V-1PH	480V-1PH	480V-3PH	LOCATION	STARTERS TYPE: NEMA SIZE	MANUAL	MAGNETIC	BUILT-IN MOTOR O/L	VFD	VFD W/BYPASS	STARTERS LOCATION: NEAR MOTOR	MOTOR CONT. CNTR	EQUIP. CONT. PANEL	ROOM NUMBER	SEE NOTE	FURNISHED BY	DISCONNECT MEANS TYPE: DISC. SWITCH	MANUAL STARTER	RECEPTACLE	BREAKER	FUSIBLE	DISCONNECT MEANS LOCATION: NEAR MOTOR	MOTOR CONT. PANEL	EQUIP. CONT. PANEL	PANELBOARD	SEE NOTE	FURNISHED BY	INTERLOCK W/ DAMPER NO. BY EC	CONTROL: MANUAL AT STARTER	INTEGRAL W/ EQUIP.	BY H.C.	SEE NOTE	FEEDER: NO. OF CONDUCTORS	WIRE SIZE	GRD. SIZE	CONDUIT SIZE	SEE NOTE
RTU-1		ROOFTOP 1	28MCA / 45MOCP		•				ROOF (TENANT 1)									•			HC	•							•						•		3	10	10	.75	
RTU-2		ROOFTOP 2	34MCA / 50MOCP		•				ROOF (TENANT 2)									•			HC	•							•						•		3	10	10	.75	2
RTU-3		ROOFTOP 3	28MCA / 45MOCP		•				ROOF (TENANT 3)									•			HC	•							•						•		3	10	10	.75	
RTU-4		ROOFTOP 4	26MCA / 30MOCP		•				ROOF (TENANT 4)									•			HC	•							•						•		3	10	10	.75	
RTU-5		ROOFTOP 5	41MCA / 50MOCP		•				ROOF (TENANT 5)									•			HC	•							•						•		3	8	10	.75	2
RTU 6-1		ROOFTOP 6-1	41MCA / 50MOCP		•				ROOF (TENANT 6)									•			HC	•							•						•		3	8	10	.75	2
RTU 6-2		ROOFTOP 6-2	26MCA / 30MOCP		•				ROOF (TENANT 6)									•			HC	•							•						•		3	10	10	.75	2
AC-1a		AIR CURTAIN 1a	19KW 52MCA / 60MOCP		•				VESTIBULE 100											•		ES	•								1	EC				•	4	3	6	10	1	1
AC-1b		AIR CURTAIN 1b	14KW 52MCA / 60MOCP		•				VESTIBULE 100											•		ES	•								1	EC				•	4	3	6	10	1	1
AC6-1a		AIR CURTAIN 6-1a	19KW 52MCA / 60MOCP		•				VESTIBULE 600											•		ES	•								1	EC				•	4	3	6	10	1	1
AC6-1a		AIR CURTAIN 6-1b	14KW 52MCA / 60MOCP		•				VESTIBULE 600											•		ES	•								1	EC				•	4	3	6	10	1	1
AC6-2		AIR CURTIAIN 6-2	14KW 46MCA / 60 MOCP		•				ENTRY 611											•		ES	•								1	EC				•	4	3	6	10	1	
EH		ELECTRIC HEATER	1.5KW	•					VARIOUS LOCATIONS											•		ES	•							•								2	12	12	.5	
RH-3-1		RADIANT HEATER 1	5 AMPS	•					BUS/ TRUCK BAY											•		ES	•					•				EC				•		2	12	12	.5	
RH-3-2		RADIANT HEATER 2	5 AMPS	•					CAR BAY											•		ES	•					•				EC				•		2	12	12	.5	
GUH-3-1		GAS UNIT HEATER 1	5 AMPS	•					BUS/TRUCK BAY											•		ES	•					•				EC				•		2	12	12	.5	
GUH-3-2		GAS UNIT HEATER 2	5 AMPS	•					CAR BAY											•		ES	•					•				EC				•		2	12	12	.5	
EF1-1		EXHAUST FAN 1-1	1/4 HP	•					ROOM 304 (ROOF) (RR)			ECM							3		HC	•						•				HC	•				5	2	12	12	.5	3
EF1-2		EXHAUST FAN 1-2	1/2 HP	•					ROOM 104			ECM							3		HC	•						•				HC	•				6	2	12	12	.5	3
EF1-3		EXHAUST FAN 1-3	1/4 HP	•					ROOM 304 (ROOF) (JAN)			ECM							3		HC	•						•				HC	•				6	2	12	12	.5	3
EF2		EXHAUST FAN 2	1/4 HP	•					ROOM 305 (ROOF) (RR)			ECM							3		HC	•						•				HC	•				5	2	12	12	.5	3
EF3-1		EXHAUST FAN 3-1	1/2 HP	•					BUS/TRUCK BAY			ECM							3		HC	•						•				HC	•			•		2	12	12	.5	3
EF3-2		EXHAUST FAN 3-2	1/2 HP	•					CAR BAY			ECM							3		HC	•						•				HC	•			•		2	12	12	.5	3
EF3-3		EXHAUST FAN 3-3	1/4 HP	•					CORR 302 (ROOF) (RR)			ECM							3		HC	•						•				HC	•			•	5	2	12	12	.5	3
EF4		EXHAUST FAN 4	1/4 HP	•					ROOM 404 (ROOF) (RR)			ECM							3		HC	•						•				HC	•				5	2	12	12	.5	3
EF5		EXHAUST FAN 5	1/4 HP	•					ROOM 615 (ROOF) (RR)			ECM							3		HC	•						•				HC	•				5	2	12	12	.5	3
EF6-1		EXHAUST FAN 6-1	1/4 HP	•					ROOM 612 (ROOF) (RR)			ECM							3		HC	•						•				HC	•				5	2	12	12	.5	3
EF6-2		EXHAUST FAN 6-2	1/4 HP	•					ROOM 402 (ROOF)			ECM							3		HC	•						•				HC	•				6	2	12	12	.5	3
WH1		WATER HEATER	4.5 KW (30 MOCP)			•			VARIOUS LOCATIONS													•						•			EC						2	10	10	.5	

NOTES:

1. AIR CURTAIN REQUIRES TWO DEDICATED CIRCUITS. PROVIDE FUSED DISCONNECT ABOVE CEILING AT UNIT. COORDINATE LOCATION AND FUSING WITH H.C.
2. COORDINATE DUCT SMOKE DETECTOR INSTALLATION IN RETURN AIR DUCT AND SHUTDOWN CONTROL WITH H.C. CONNECT DETECTOR TO FIRE ALARM SYSTEM.
3. EXHAUST FAN ECM CONTROLLED (ECM FURNISHED BY H.C., INSTALLED & WIRED BY E.C.) E.C. TO LOCATE ECM ADJACENT TO PANELBOARD FAN IS SERVED FROM. INTERLOCK DAMPER WITH FAN.
4. COORDINATE CONTROL REQUIREMENTS/ROUGH-IN WITH H.C. (DOOR SWITCH, THERMOSTAT,ETC.).
5. CONTROL FOR RESTROOM OCCUPANCY SENSOR.
6. FAN RUNS CONTINUOUS.

ELECTRICAL LEGEND CONT.

- OS — LIGHTING OCCUPANCY SENSOR WALL SWITCH (46" M.H.)
- OS2 — LIGHTING OCCUPANCY SENSOR 2 CIRCUIT WALL SWITCH (46" M.H.).
- D — LIGHTING 0-10V LED DIMMER SWITCH WITH PRESET SLIDE CONTROL AND POWER ON-OFF 'DECORATOR' STYLE SWITCH (46" M.H.) UNLESS OTHERWISE INDICATED.
- 3D — LIGHTING 0-10V LED DIMMER SWITCH WITH PRESET SLIDE CONTROL AND 3-WAY POWER ON-OFF 'DECORATOR' STYLE SWITCH (46" M.H.) UNLESS OTHERWISE INDICATED.
- VS — LIGHTING VACANCY SENSOR WALL SWITCH WITH MANUAL 'ON' PUSHBUTTON AND DUAL TECHNOLOGY MOTION SENSOR TO AUTOMATICALLY TURN 'OFF' WHEN ROOM UNOCCUPIED (46" M.H.).
- DV — 0-10V LED COMBINATION VACANCY SENSOR AND DIMMER SWITCH WITH PRESET SLIDE CONTROL AND SEPARATE ON-OFF 'DECORATOR' STYLE SWITCH (46" M.H.) UNLESS OTHERWISE INDICATED, RATED MIN. 800 WATTS.
- M — FLUSH FRACTIONAL HORSEPOWER MOTOR STARTER WITH NEON PILOT LIGHT. ONE-GANG ASSEMBLY (46" M.H.).
- H — HP RATED WALL SWITCH (46" M.H.).
- OS — OCCUPANCY SENSOR, CEILING MOUNTED.
- OR — OCCUPANCY SENSOR CONTROL RELAY.
- DISCONNECT SWITCH
- MOTOR STARTER.
- COMBINATION MOTOR STARTER AND DISCONNECT SWITCH.
- ELECTRIC MOTOR.
- EH — ELECTRIC HEATER.
- FC — FAN COIL UNIT.
- CIRCUIT BREAKER PANEL, FLUSH MOUNTED.
- CIRCUIT BREAKER PANEL, SURFACE MOUNTED.
- DATA OUTLET (18" M.H. EXCEPT WHEN SUBSCRIPT "W" IS SHOWN, MOUNT AT 46" M.H.). TWO GANG OUTLET BOX WITH SINGLE GANG TRIM RING AND BLANK COVERPLATE. STUB AN EMPTY 0.75" BUSHED CONDUIT OUT ABOVE ACCESSIBLE CEILING.
- AP — WIRELESS WIFI ACCESS POINT; CEILING MOUNTED.
- F 15 — FIRE ALARM HORN & SIGNAL LIGHT (80" A.F.F.), # WHEN SHOWN INDICATES CANDELA RATING OF STROBE. WHEN A # IS NOT SHOWN, THE STROBE SHALL BE RATED 110 CANDELA.
- L 15 — FIRE ALARM SIGNALING LIGHT (80" A.F.F.), # WHEN SHOWN INDICATES CANDELA RATING OF STROBE. WHEN A # IS NOT SHOWN, THE STROBE SHALL BE RATED 110 CANDELA.
- F — FIRE ALARM SENDING STATION (46" M.H.).
- S — CEILING MOUNTED SMOKE DETECTOR.
- H — CEILING MOUNTED HEAT DETECTOR.
- S S/R — DUCT MOUNTED SMOKE DETECTOR (S/SUPPLY, R/RETURN).
- T — TELEVISION ANTENNA OUTLET 84" AFF (OR AS NOTED) - 1-GANG BOX WITH 0.75"C. TO ABOVE CEILING.
- CR — DOOR ACCESS CONTROL SYSTEM CARD READER - 46" M.H.
- C F — CCTV CAMERA. F = FIXED; PTZ = PAN/TILT/ZOOM
- W — WATER FLOW SWITCH.
- RT — DUCT MOUNTED DETECTOR REMOTE TEST STATION AND ALARM INDICATOR.
- SD — SMOKE DAMPER
- A — ELECTRIC DOOR OPERATOR, INCLUDING RELAYS, OPERATING SWITCHES AND LIMIT SWITCHES SHALL BE FURNISHED BY THE DOOR EQUIPMENT SUPPLIER AND INSTALLED BY THE E.C. IN ACCORDANCE WITH APPROVED WIRING DIAGRAMS BY THE EQUIPMENT SUPPLIER (120 VOLT SINGLE PHASE OPERATION).
- P — PUSHPLATE DOOR CONTROLS FURNISHED BY THE DOOR EQUIPMENT SUPPLIER AND INSTALLED BY THE E.C. (42" M.H.).
- BUZZER (90" M.H.). SINGLE GANG BOX WITH 0.75" BUSHED CONDUIT TO ABOVE ACCESSIBLE CORRIDOR CEILING.
- B — BUZZER (90" M.H.). SINGLE GANG BOX WITH 0.75" BUSHED CONDUIT TO ABOVE ACCESSIBLE CORRIDOR CEILING.
- TV — TELEVISION ANTENNA OUTLET (84" M.H.). SINGLE GANG BOX WITH 0.75" BUSHED CONDUIT TO ABOVE ACCESSIBLE CORRIDOR CEILING OR NEAREST CABLE TRAY.

GENERAL NOTES

A. ALL WORK SHALL BE IN ACCORDANCE WITH THE 2017 OHIO BUILDING CODE, INCLUDING REFERENCED CODES AND STANDARDS, ALL LOCAL AND STATE CODES AND MEET APPROVAL OF AUTHORITIES HAVING JURISDICTION.

B. BIDDERS SHALL INSPECT PROJECT SITE EXISTING CONDITIONS DURING BIDDING.

C. INCLUDE PAYMENT OF ALL PERMIT AND INSPECTION FEES AND OBTAIN AN ELECTRICAL PERMIT AND SECURE INSPECTION AND APPROVAL OF THE CODE OFFICIAL.

D. SUBMIT AN ELECTRONIC COPY OF SUBMITTAL DATA AND DESCRIPTIVE LITERATURE IN .PDF FORMAT FOR ALL FIXTURES AND EQUIPMENT.

E. WORKMANSHIP SHALL BE OF THE HIGHEST QUALITY AND REPRESENT THE BEST PRACTICES OF THE INDUSTRY.

F. COORDINATE INSTALLATION WITH OTHER TRADES; PROVIDE OFFSETS AS REQUIRED.

G. INSTALL ALL MATERIALS AND EQUIPMENT IN ACCORDANCE WITH MANUFACTURERS REQUIREMENTS.

H. COORDINATE EACH ROUGH-IN INSTALLATION REQUIREMENTS AND LOCATIONS WITH OTHER TRADES, ACTUAL EQUIPMENT OR CABINETRY PROVIDED AND FIELD CONDITIONS BEFORE PERFORMING WORK.

I. REFER TO ARCHITECTURAL DRAWING ELEVATIONS FOR MOUNTING LOCATION INFORMATION, ARRANGEMENT AND HEIGHT FOR ALL DEVICES AT FURNISHINGS, CASEWORK, ETC.

J. REFER TO ARCHITECTURAL REFLECTED CEILING PLANS FOR EXACT LOCATION OF ALL LIGHTING FIXTURES. WHERE DISCREPANCIES MAY OCCUR BETWEEN THE ELECTRICAL PLANS AND THE ARCHITECTURAL CEILING PLANS ON QUANTITY OF FIXTURES, THE ELECTRICAL PLANS SHALL TAKE PRECEDENCE. COORDINATE FIXTURE LOCATIONS WITH OTHER TRADES TO AVOID CONFLICTS WITH PIPING AND DUCTWORK.

K. ALL EQUIPMENT AND MATERIAL REQUIRED FOR COMPLETE AND FUNCTIONAL ELECTRICAL SYSTEMS SHALL BE INCLUDED IN THE CONTRACT.

ELECTRICAL LEGEND

- ELECTRICAL CONNECTION REQUIRED.
- EXIT LIGHTING FIXTURE. ARROWS AS INDICATED.
- H1 B1 a b — LIGHTING FIXTURE: CAPITAL LETTER DENOTES FIXTURES TYPE. LOWER CASE LETTER DENOTES SWITCHING ARRANGEMENT.
- H1 B1 — LIGHTING FIXTURE ON NIGHT LIGHT OR EMERGENCY CIRCUIT.
- W — WIRE RUN IN SURFACE RACEWAY.
- NL — WIRE & CONDUIT FOR NIGHT LIGHT CIRCUITRY.
- EM — WIRE & CONDUIT FOR EMERGENCY CIRCUITRY.
- E — EXISTING WIRE & CONDUIT.
- A-1&2 — EACH ARROWHEAD REPRESENTS ONE COMPLETE CIRCUIT; CAPITAL LETTER DENOTES PANEL; NUMBER DENOTES CIRCUIT.
- WIRE & CONDUIT IN WALL OR ABOVE CEILING
- WIRE & CONDUIT UNDERGROUND
- J — JUNCTION BOX.
- 20A-125V DUPLEX RECEPTACLE, NEMA 5-20R (18" M.H.).
- U — 20A-125V DUPLEX RECEPTACLE WITH INTEGRAL USB CHARGING PORTS (2), NEMA 5-20R (18" M.H.). (HUBBELL USB200I OR EQUAL).
- SPECIAL PURPOSE RECEPTACLE. REFER TO NOTE ON PLAN
- D — 20A-125V DOUBLE DUPLEX RECEPTACLE, NEMA 5-20R, (18" M.H.) TWO-GANG ASSEMBLY. D = DOUBLE DUPLEX.
- D — 20A-125V DUPLEX RECEPTACLE, NEMA 5-20R, (46" M.H.) D = DOUBLE DUPLEX.
- GF — 20A-125V DUPLEX RECEPTACLE, NEMA 5-20R, WITH GROUND FAULT CIRCUIT INTERRUPTER (18" M.H.).
- T — 20A-125V TAMPERPROOF RECEPTACLE, NEMA 5-20R, (18" M.H.).
- WP/GF — 20A-125V WEATHERPROOF DUPLEX RECEPTACLE, NEMA 5-20R, WITH GROUND FAULT CIRCUIT INTERRUPTER (18" M.H.), WITH HUBBELL #WP26M CAST ALUMINUM "WHILE-IN-USE" COVER.
- D — POWER/DATA FLOOR OUTLET WITH NEMA 5-20R RECEPTACLE, HUBBELL BA-2436 FLUSH FLOOR OUTLET BOX AND SA-3826 COVERPLATE WITH 0.75" POWER-4 1" DATA CONDUIT TO ABOVE ACCESSIBLE CEILING. PROVIDE CARPET FLANGE WHERE REQUIRED.
- 20 — 20A-125V/250V-1PH-4W SINGLE RECEPTACLE, NEMA 14-20R, (18" M.H.).
- 30 — 30A-125V/250V-1PH-4W SINGLE RECEPTACLE, NEMA 14-30R, (18" M.H.).
- 50 — 50A-125V/250V-1PH-4W SINGLE RECEPTACLE, NEMA 14-50R (18" M.H.)
- SINGLE POLE WALL SWITCH (46" M.H.)
- 3 — THREE-WAY WALL SWITCH (46" M.H.).

NAUMAN & ZELINSKI LLC.
204 S. Ludlow Street Suite 400 Dayton, Ohio 45402
Phone: (937) 223-3821 - Fax: (937) 223-3849

App Architecture
creative focused design
615 Woodside Drive, Englewood, Ohio 45322
T 937.836.8898 F 937.832.3696
www.app-arch.com

STATE OF OHIO
JEFFREY D. ZELINSKI
63822
REGISTERED
PROFESSIONAL ENGINEER

MIAMI COUNTY ONE STOP CENTER
BOARD OF COMMISSIONERS FOR MIAMI COUNTY, OHIO
BARNHART ROAD, TROY, OHIO 45373

ISSUE

NO.	DATE	DESCRIPTION
1	04/08/2022	FOR CONSTRUCTION

DATE	04/08/22
JOB NO.	3923.00
DRAWN	TR
CHECKED	JDZ

COPYRIGHT © 2022 - App Architecture, Inc.

TITLE
LEGENDS AND SCHEDULES

SHEET NO.
E0.1

4/8/2022 1:33:26 PM

PANEL R1

MOUNTING: SURFACE
CONN. LOAD :
DEMAND LOAD:
MAINS: 200A M.B.
VOLTAGE: 208Y/120V-3PH-4W

REMARK	DEMAND KVA	CONNECTED KVA	BKR.	CKT. NO.		BKR.	CONNECTED KVA	DEMAND KVA	REMARK
LOBBY LTG.		0.6-L	20/1	1	2	20/1	0.4-R		300
104 RACK		2.0-R	20/2	3	4	20/1	1.0-R		102,103
			-	5	6	20/1	1.2-R		101
HAND DRYER		1.0-H/M	20/1	7	8	20/1	1.0-M		ADA DOORS
HAND DRYER		1.0-H/M	20/1	9	10	20/1	1.5-H		EH 301
MESSAGE BRD		0.5-R	20/1	11	12	20/1			
			20/1	13	14	20/1			
			20/1	15	16	20/1			
			20/1	17	18	20/1			
			20/1	19	20	20/1			
			20/1	21	22	20/1			
			20/1	23	24	20/1			
EF1-1		0.4-M	20/1	25	26	60/3	14-H/M		AC1 a
WTR HTR		4.5-H	30/2	27	28	-			
			-	29	30	-			
RTU-1		10-M	45/3	31	32	60/3	14-M		AC1 b
			-	33	34	-			
			-	35	36	-			
SPD			30/3	37	38	20/1			STANDBY
			-	39	40	20/1			A.T.S
			-	41	42	20/1			

ABBREVIATIONS:
L-LIGHTS, R-RECEPTACLES, M-MOTORS, H- RESISTANCE HEAT, C-CONTROL,
M.L.O- MAIN LUGS ONLY, D.S.L.- DOUBLE SET OF LUGS, M.B- MAIN BREAKER,
L.C.- LOCKING CLIP ON BREAKER

PANEL R2

MOUNTING: SURFACE
CONN. LOAD :
DEMAND LOAD:
MAINS: 200A M.B.
VOLTAGE: 208Y/120V-3PH-4W

REMARK	DEMAND KVA	CONNECTED KVA	BKR.	CKT. NO.		BKR.	CONNECTED KVA	DEMAND KVA	REMARK
SUITE LTG.		1.2-L	20/1	1	2	20/1	1.8-R		203
201		1.2-R	20/1	3	4	20/1	0.4-R		204
201		1.2-R	20/1	5	6	20/1	0.2-R		204
201		1.2-R	20/1	7	8	20/1	1.0-R		204 MICRO
201		1.2-R	20/1	9	10	20/1	1.0-R		204,205
202		0.4-R	20/1	11	12	20/1	0.4-R		205 RACK
202		0.4-R	20/1	13	14	20/1	1.0-R		200
202		0.4-R	20/1	15	16	20/1	0.8-R		KIOSK
202		0.4-R	20/1	17	18	20/1	1.0-R		201
202		0.6-R	20/1	19	20	20/1	0.6-R		206
202		0.8-R	20/1	21	22	20/1	0.6-M		EF-2
202		0.4-R	20/1	23	24	20/1	0.5-M		DISPOSER
202		0.6-R	20/1	25	26	20/1			
			20/1	27	28	20/1			
			20/1	29	30	20/1			
			20/1	31	32	20/1			
EH		1.5-H	20/1	33	34	30/2	4.5-H		WTR HTR
EH		1.5-H	20/1	35	36	-			
SPD			30/3	37	38	45/3	10-M		RTU-2
			-	39	40	-			
			-	41	42	-			

ABBREVIATIONS:
L-LIGHTS, R-RECEPTACLES, M-MOTORS, H- RESISTANCE HEAT, C-CONTROL,
M.L.O- MAIN LUGS ONLY, D.S.L.- DOUBLE SET OF LUGS, M.B- MAIN BREAKER,
L.C.- LOCKING CLIP ON BREAKER

PANEL R7

MOUNTING: SURFACE
CONN. LOAD :
DEMAND LOAD:
MAINS: 200A M.B.
VOLTAGE: 208Y/120V-3PH-4W

REMARK	DEMAND KVA	CONNECTED KVA	BKR.	CKT. NO.		BKR.	CONNECTED KVA	DEMAND KVA	REMARK
SITE LTG.		0.7-L	20/1	1	2	20/1	0.3-L		SHED
SITE LTG.		0.6-L	20/1	3	4	20/1	0.5-R		SHED
POLE CAMERA		0.2-C	20/1	5	6	20/1	0.6-M		EF6-1
SITE LTG.		0.7-L	20/1	7	8	20/1	0.6-M		EF6-2
SITE LTG.		0.7-L	20/1	9	10	20/1	1.0-M		ADA DOOR
POLE CAMERA		0.2-C	20/1	11	12	20/1	0.4-R		700
BLDG. LTG		0.3-L	20/1	13	14	20/1	0.4-R		700
ENTRY LTG.		0.2-L	20/1	15	16	20/1	0.5-M		DRY PIPE COMPR
			20/1	17	18	20/1			
			20/1	19	20	20/1			
			20/1	21	22	20/1			
			20/1	23	24	20/1			
			20/1	25	26	20/1			
			20/1	27	28	20/1			
RTU6-1		15-M	50/3	29	30	20/1			
			-	31	32	20/1			
			-	33	34	20/1			
EH		15-H	20/1	35	36	20/1			
SPD			30/3	37	38	60/3	14-H		AC6-2
			-	39	40	-			
			-	41	42	-			

ABBREVIATIONS:
L-LIGHTS, R-RECEPTACLES, M-MOTORS, H- RESISTANCE HEAT, C-CONTROL,
M.L.O- MAIN LUGS ONLY, D.S.L.- DOUBLE SET OF LUGS, M.B- MAIN BREAKER,
L.C.- LOCKING CLIP ON BREAKER

PANEL R3

MOUNTING: SURFACE
CONN. LOAD :
DEMAND LOAD:
MAINS: 200A M.B.
VOLTAGE: 208Y/120V-3PH-4W

REMARK	DEMAND KVA	CONNECTED KVA	BKR.	CKT. NO.		BKR.	CONNECTED KVA	DEMAND KVA	REMARK
SUITE LTG.		0.8-L	20/1	1	2	20/1	0.6-R		316
SUITE LTG.		0.7-L	20/1	3	4	20/1	1.0-R		317
BAY LTG.		0.8-L	20/1	5	6	20/1	0.8-R		312
302, 314		1.0-R	20/1	7	8	20/1	1.0-R		312
316		0.8-R	20/1	9	10	20/1	0.4-R		311
316		1.2-R	20/1	11	12	20/1	1.2-R		310,302
SPARE			20/1	13	14	20/1	1.0-R		306
SPARE			20/1	15	16	20/1	0.8-R		305
E3-3		0.4-M	20/1	17	18	20/1	1.0-R		304
EH		1.5-H	20/1	19	20	20/1	1.0-R		303
EH		1.5-H	20/1	21	22	30/2	4.5-H		WAT. HTR.
EH		1.5-H	20/1	23	24	-			
EH		1.5-H	20/1	25	26	30/3	5-M		AIR COMP.
EF3-1		0.4-M	20/1	27	28	-			
EF3-2		0.4-M	20/1	29	30	-			
GAS HTRS		0.4-M	20/1	31	32	60/3	12-M		VEHICLE LIFT
RAD HTR		0.6-M	20/1	33	34	20/1			
RAD HTR		0.6-M	20/1	35	36	20/1			
O/H DOOR		1.0-M	20/1	37	38	45/3	10-M		RTU-3
O/H DOOR		1.0-M	20/1	39	40	-			
O/H DOOR		1.0-M	20/1	41	42	-			
O/H DOOR		1.0-M	20/1	43	44	20/1			SPARE
SPARE			20/1	45	46	20/1			SPARE
SPARE			20/1	47	48	20/1			SPARE
SPD			30/3	49	50	20/1			SPARE
			-	51	52	20/1			SPARE
			-	53	54	20/1			SPARE

ABBREVIATIONS:
L-LIGHTS, R-RECEPTACLES, M-MOTORS, H- RESISTANCE HEAT, C-CONTROL,
M.L.O- MAIN LUGS ONLY, D.S.L.- DOUBLE SET OF LUGS, M.B- MAIN BREAKER,
L.C.- LOCKING CLIP ON BREAKER

PANEL R4

MOUNTING: SURFACE
CONN. LOAD :
DEMAND LOAD:
MAINS: 200A M.B.
VOLTAGE: 208Y/120V-3PH-4W

REMARK	DEMAND KVA	CONNECTED KVA	BKR.	CKT. NO.		BKR.	CONNECTED KVA	DEMAND KVA	REMARK
SUITE LTG.		0.6-L	20/1	1	2	20/1	0.8-R		403,404
405		0.4-R	20/1	3	4	20/1	0.2-R		404
405		0.4-R	20/1	5	6	20/1	1.0-R		404 MICRO
405		0.4-R	20/1	7	8	20/1	0.4-R		404
405		0.4-R	20/1	9	10	20/1	0.4-R		402
401		0.8-R	20/1	11	12	20/1	0.4-R		405
			20/1	13	14	20/1	0.4-R		405
			20/1	15	16	20/1	0.4-R		405
			20/1	17	18	20/1	0.4-R		405
			20/1	19	20	20/1			
			20/1	21	22	20/1			
			20/1	23	24	20/1			
			20/1	25	26	20/1			
			20/1	27	28	20/1			
			20/1	29	30	20/1	1.5-H		EH
			20/1	31	32	20/1	1.5-H		EH
			20/1	33	34	30/2	4.5-H		WTR HTR
EF-4		0.6-M	20/1	35	36	-			
SPD			30/3	37	38	30/3			RTU-4
			-	39	40	-			
			-	41	42	-			

ABBREVIATIONS:
L-LIGHTS, R-RECEPTACLES, M-MOTORS, H- RESISTANCE HEAT, C-CONTROL,
M.L.O- MAIN LUGS ONLY, D.S.L.- DOUBLE SET OF LUGS, M.B- MAIN BREAKER,
L.C.- LOCKING CLIP ON BREAKER

PANEL SB

MOUNTING: SURFACE
CONN. LOAD : 12 KW
DEMAND LOAD: 12KW (50 AMPS)
MAINS: 100A M.B.
VOLTAGE: 208Y/120V-1PH-3W

REMARK	DEMAND KVA	CONNECTED KVA	BKR.	CKT. NO.		BKR.	CONNECTED KVA	DEMAND KVA	REMARK
RISER RM 700		1.0-R	20/1	1	2	20/1	0.4-R		DATA 104
RACK 402		1.0-R	20/1	3	4	20/1	0.4-R		DATA 104
RACK 311...		1.0-R	20/1	5	6	20/1	0.4-R		DATA 104
RACK 205		1.0-R	20/1	7	8	20/1	0.4-R		DATA 104
RACK 621		1.0-R	20/1	9	10	20/1	0.4-R		F.A. PNL.
RACK 505		1.0-R	20/1	11	12	20/2	2.0-R		SERVER 104
S.B. LTG.		1.2-L	20/1	13	14	-			
EF1-2		0.6-M	20/1	15	16	20/1			
			20/1	17	18	20/1			
			20/1	19	20	20/1			
			20/1	21	22	20/1			
			20/1	23	24	20/1			
SPD			30/3	25	26	20/1			
			-	27	28	20/1			
			-	29	30	20/1			

ABBREVIATIONS:
L-LIGHTS, R-RECEPTACLES, M-MOTORS, H- RESISTANCE HEAT, C-CONTROL,
M.L.O- MAIN LUGS ONLY, D.S.L.- DOUBLE SET OF LUGS, M.B- MAIN BREAKER,
L.C.- LOCKING CLIP ON BREAKER

PANEL R5

MOUNTING: SURFACE
CONN. LOAD :
DEMAND LOAD:
MAINS: 200A M.B.
VOLTAGE: 208Y/120V-3PH-4W

REMARK	DEMAND KVA	CONNECTED KVA	BKR.	CKT. NO.		BKR.	CONNECTED KVA	DEMAND KVA	REMARK
SUITE LTG.		0.9-L	20/1	1	2	20/1	0.4-R		505 RACK
SUITE LTG.		0.5-L	20/1	3	4	20/1	0.8-R		505,504
501 COPIER		1.0-R	20/1	5	6	20/1	0.4-R		506
500		0.8-R	20/1	7	8	20/1	0.4-R		506
502		0.8-R	20/1	9	10	20/1	0.8-R		506
502		0.8-R	20/1	11	12	20/1	1.0-R		506 MICRO
502		0.8-R	20/1	13	14	20/1	1.2-R		507
502		0.8-R	20/1	15	16	20/1	1.2-R		508
502		0.8-R	20/1	17	18	20/1	0.5-R		503
502 COPIER		1.0-R	20/1	19	20	20/1	1.5-H		502
502		1.0-R	20/1	21	22	20/1			
			20/1	23	24	20/1			
			20/1	25	26	20/1			
			20/1	27	28	20/1			
			20/1	29	30	20/1			
			20/1	31	32	20/1			
EF-5		0.6-M	20/1	33	34	30/2	4.5-H		WTR HTR
EH		1.5-H	20/1	35	36	-			
SPD			30/3	37	38	30/3			RTU-5
			-	39	40	-			
			-	41	42	-			

ABBREVIATIONS:
L-LIGHTS, R-RECEPTACLES, M-MOTORS, H- RESISTANCE HEAT, C-CONTROL,
M.L.O- MAIN LUGS ONLY, D.S.L.- DOUBLE SET OF LUGS, M.B- MAIN BREAKER,
L.C.- LOCKING CLIP ON BREAKER

PANEL R6

MOUNTING: SURFACE
CONN. LOAD :
DEMAND LOAD:
MAINS: 200A M.B.
VOLTAGE: 208Y/120V-3PH-4W

REMARK	DEMAND KVA	CONNECTED KVA	BKR.	CKT. NO.		BKR.	CONNECTED KVA	DEMAND KVA	REMARK
SUITE LTG.		0.8-L	20/1	1	2	20/1	1.0-R		617,618
SUITE LTG.		0.8-L	20/1	3	4	20/1	1.0-R		620
SUITE LTG.		0.8-L	20/1	5	6	20/1	0.6-R		618
604 MICRO		1.0-R	20/1	7	8	20/1	0.8-R		618
604		0.8-R	20/1	9	10	20/1	0.6-R		
604		1.0-R	20/1	11	12	20/1	0.6-R		
601		0.6-R	20/1	13	14	20/1	0.6-R		
601,603		1.0-R	20/1	15	16	20/1	0.8-R		607
605		0.6-R'	20/1	17	18	20/1	0.5-R		607
605		0.8-R	20/1	19	20	20/1	0.4-R		606
608		1.4-R	20/1	21	22	20/1	0.6-R		606
609		1.6-R	20/1	23	24	20/1	0.4-R		603
610		1.6-R	20/1	25	26	60/3	19-H/M		AC6-1a
611		1.0-R	20/1	27	28	-			
611		0.8-R	20/1	29	30	-			
611		0.4-R	20/1	31	32	60/3	14-H		AC6-1b
WTR HTR		4.5-H	30/2	33	34	-			
			-	35	36	-			
			20/1	37	38	30/3	9-M		RTU-6
			20/1	39	40	-			
			20/1	41	42	-			
			20/1	43	44	20/1			
			20/1	45	46	20/1			
			20/1	47	48	20/1			
SPD			30/3	49	50	20/1			
			-	51	52	20/1			
			-	53	54	20/1			

ABBREVIATIONS:
L-LIGHTS, R-RECEPTACLES, M-MOTORS, H- RESISTANCE HEAT, C-CONTROL,
M.L.O- MAIN LUGS ONLY, D.S.L.- DOUBLE SET OF LUGS, M.B- MAIN BREAKER,
L.C.- LOCKING CLIP ON BREAKER

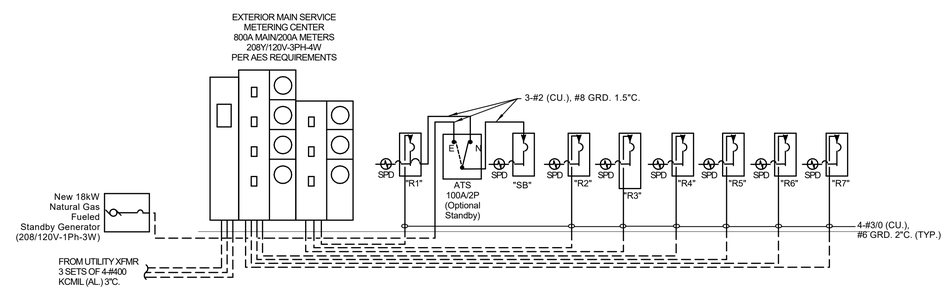

SINGLE-LINE DIAGRAM

NAUMAN & ZELINSKI LLC.
204 S. Ludlow Street Suite 400 Dayton, Ohio 45402
Phone: (937) 223-3821 - Fax: (937) 223-3849

App Architecture
creative focused design
615 Woodside Drive, Englewood, Ohio 45322
T 937.836.8898 F 937.832.3696
www.app-arch.com

STATE OF OHIO
JEFFREY D. ZELINSKI
63822
REGISTERED
PROFESSIONAL ENGINEER

MIAMI COUNTY ONE STOP CENTER
BOARD OF COMMISSIONERS FOR MIAMI COUNTY, OHIO
BARNHART ROAD, TROY, OHIO 45373

ISSUE

NO.	DATE	DESCRIPTION
1	04/08/2022	FOR CONSTRUCTION

DATE	04/08/22
JOB NO.	3923.00
DRAWN	TR
CHECKED	JDZ

COPYRIGHT © 2022 - App Architecture, Inc.

TITLE
SCHEDULES AND SINGLE LINE DIAGRAM

SHEET NO.
E0.2

4/8/2022 1:33:29 PM

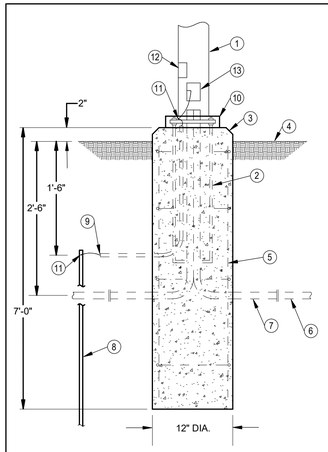

1. SEE FIXTURE SCHEDULE FOR POLE AND FIXTURE ASSEMBLY
2. ANCHOR BOLTS BY POLE SUPPLIER, WELD TO REBARS
3. CHAMFERED EDGE.
4. FINISH GRADE, COMPACT TO 95%.
5. SIX #4 REINFORCING BARS VERTICALLY ON # 3 STIRRUPS AT 18" O.C.
6. PVC CONDUIT, SCHEDULE 40.
7. RIGID GALVANIZED STEEL CONDUIT.
8. GROUND ROD.
9. 0.50" PVC GROUND CONDUCTOR SLEEVE WITH #8 GROUND CONDUCTOR.
10. BASE PLATE, LEVELING NUTS, GROUT BASE.
11. EXOTHERMICALLY WELDED GROUND CONNECTION.
12. LIGHTNING ARRESTOR.
13. HANDHOLE.

1 TYPICAL POLE BASE DETAIL
N.T.S.

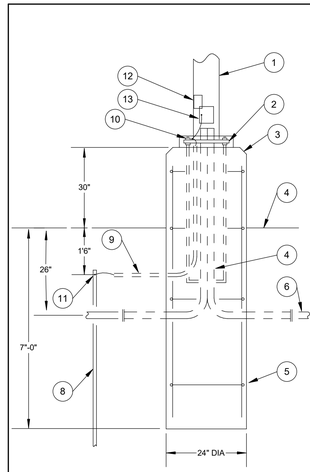

1. SEE FIXTURE SCHEDULE FOR POLE AND FIXTURE ASSEMBLY.
2. ANCHOR BOLTS BY POLE SUPPLIER, WELD TO REBARS.
3. CHAMFERED EDGE.
4. FINISH GRADE, COMPACT TO 95%
5. SIX #4 =REINFORCING BARS VERTICALLY ON #3 STIRRUPS AT 18" O.C.
6. PVC CONDUIT, SCHEDULE 40.
7. RIGID GALVANIZED STEEL CONDUIT.
8. GROUND ROD.
9. 0.50" PVC GROUND CONDUCTOR SLEEVE WITH #8 GROUND CONDUCTOR.
10. BASE PLATE, LEVELING NUTS, GROUT BASE.
11. EXOTHERMICALLY WELDED GROUND CONNECTION.
12. LIGHTNING ARRESTOR.
13. HANDHOLE.

2 TYPICAL POLE BASE DETAIL - RAISED
N.T.S.

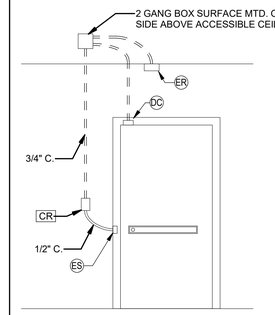

- CR CARD READER , SINGLE GANG DEEP BOX ON NON-SECURE SIDE, 46" M.H.
- ES ELECTRIC STRIKE, FURNISHED / INSTALLED BY DOOR HARDWARE SUPPLIER, ROUGH-IN BY E.C.
- DC DOOR CONTACT, FURNISHED/INSTALLED BY ACCESS CONTROL VENDOR. ROUGH-IN BY E.C.
- ER EXIT REQUEST SENSOR FURNISHED / INSTALLED BY ACCESS CONTROL VENDOR. ROUGH-IN BY E.C.

3 TYPICAL CARD READER INSTALLATION
N.T.S.

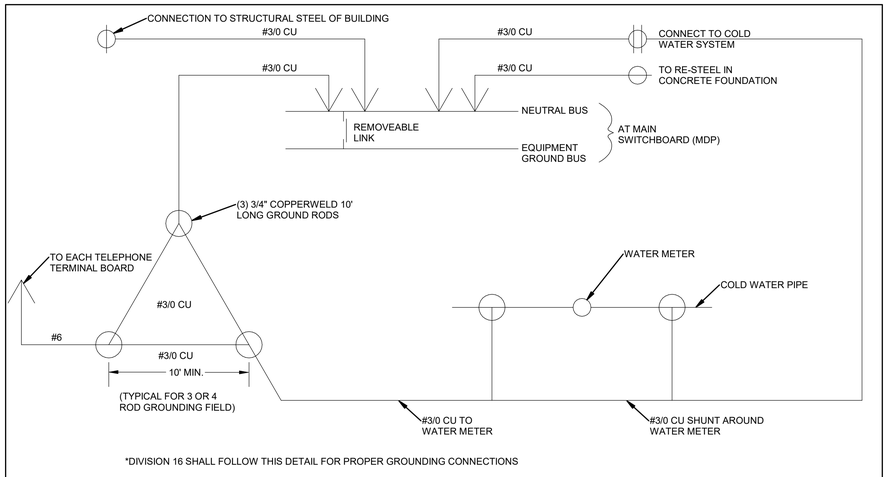

*DIVISION 16 SHALL FOLLOW THIS DETAIL FOR PROPER GROUNDING CONNECTIONS

4 GROUNDING DETAIL
N.T.S.

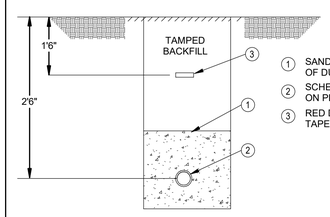

1. SAND ENCASEMENT. 3" MIN. FROM OUTSIDE OF DUCT
2. SCHEDULE 40 PVC DUCT. SIZE AS NOTED ON PLANS
3. RED DYE, RED DUST OR YELLOW MARKER TAPE ON COMPACTED FILL.

5 UNDERGROUND DUCTS
N.T.S.

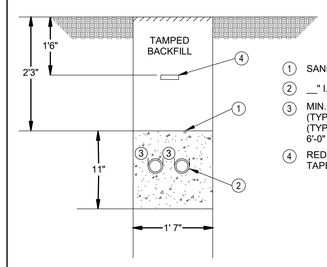

1. SAND ENCASEMENT.
2. __" I.D. DUCTS. SCHEDULE 40 PVC.
3. MIN. 3" SPACING BETWEEN CONDUITS (TYPICAL) AND MIN. 3" ENCASEMENT (TYPICAL). PROVIDE CONDUIT SPACERS 6'-0" O.C.
4. RED DYE, RED DUST OR YELLOW MARKER TAPE ON COMPACTED FILL.

6 UNDERGROUND DUCTS
N.T.S.

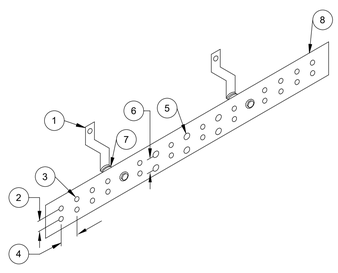

1. WALL MOUNTING BRACKET(S).
2. 5/8" (TYPICAL).
3. 5/16" DIA. HOLE (TYPICAL).
4. 1-1/8" (TYPICAL).
5. 7/16" DIA. HOLE (TYPICAL).
6. 1" (TYPICAL).
7. STANDOFF INSULATOR(S).
8. 1/4"x4"x16"L COPPER GROUND BAR.

7 GROUND BAR BRACKET 2
N.T.S.

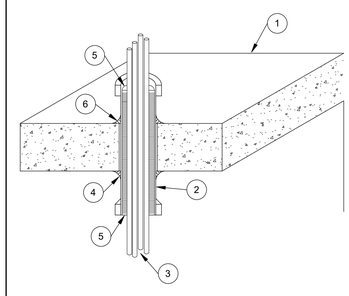

1. CONCRETE FLOOR OR WALL ASSEMBLY.
2. METALLIC SLEEVE SYSTEM-4 INCH OR SMALLER STEEL SLEEVE CAST OR GROUTED INTO FLOOR OR WALL, EXTENDING 4 INCHES BEYOND SURFACE AND TERMINATED WITH BUSHING.
3. CABLES - HORIZONTAL OR BACKBONE.
4. FORMING MATERIAL-MINIMUM 8-INCH THICKNESS, MINIMUM 4 pcf MINERAL WOOL OR CERAMIC FIBER TIGHTLY PACKED INTO SLEEVED OPENING AND RECESSED 0.5" FROM TOP SURFACE OF FLOOR SLEEVE SYSTEM OR BOTH ENDS OF WALL SLEEVE SYSTEM.
5. APPLY AN INTUMESCENT FIRE STOP CAULK OVER THE FORMING MATERIAL TO A MINIMUM 0.5" FLUSH WITH TOP OF FLOOR SLEEVE SYSTEM OR BOTH ENDS OF WALL SLEEVE SYSTEM.
6. FIRE STOP SEALANT-SELF-LEVELING TYPE FOR FLOORS ONLY OR NON SAG FOR WALLS. APPLIED IN MINIMUM 0.5" THICKNESS FLUSH WITH TOP SURFACE OF FLOOR OR BOTH FACES OF WALL.

8 CONCRETE FLOOR OR WALL SLEEVE PENETRATION
N.T.S.

NAUMAN & ZELINSKI LLC.
204 S. Ludlow Street Suite 400 Dayton, Ohio 45402
Phone: (937) 223-3821 • Fax: (937) 223-3848

App Architecture
creative focused design
615 Woodside Drive, Englewood, Ohio 45322
T 937.836.8898 F 937.832.3696
www.app-arch.com

STATE OF OHIO
JEFFREY D. ZELINSKI
63822
REGISTERED
PROFESSIONAL ENGINEER

MIAMI COUNTY ONE STOP CENTER
BOARD OF COMMISSIONERS FOR MIAMI COUNTY, OHIO
BARNHART ROAD, TROY, OHIO 45373

ISSUE

NO.	DATE	DESCRIPTION
1	04/08/2022	FOR CONSTRUCTION

DATE	04/08/22
JOB NO.	3923.00
DRAWN	TR
CHECKED	JDZ

COPYRIGHT © 2022 - App Architecture, Inc.

TITLE
DETAILS

SHEET NO.
E0.3

4/8/2022 1:33:39 PM

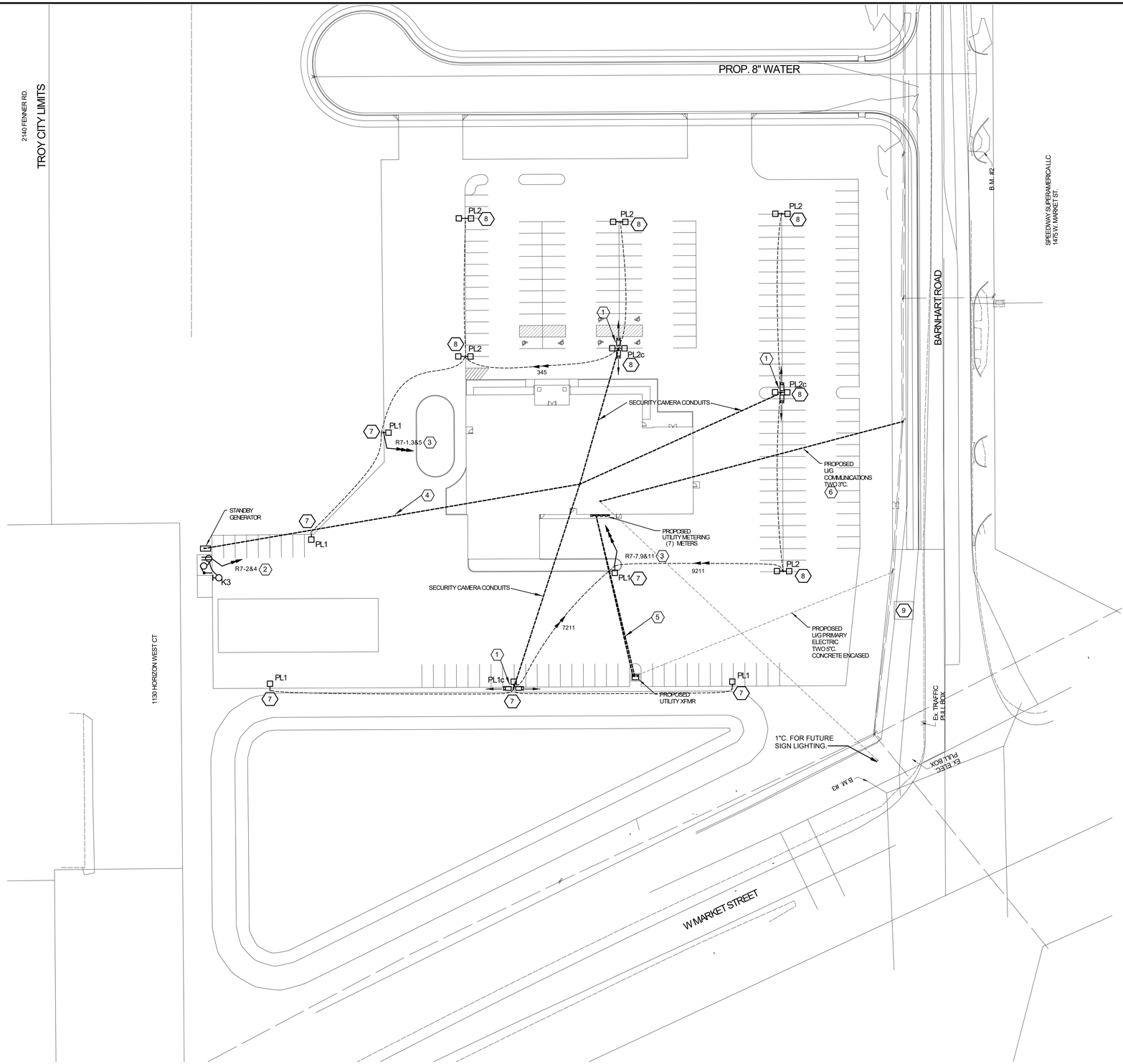

CONSTRUCTION NOTES

1. PROVIDE MOUNTING ARMS ON POLE FOR SECURITY CAMERAS. PROVIDE DEDICATED 120V CIRCUIT FOR CAMERA POWER SUPPLY. PROVIDE DEDICATED 1"C. FROM POLE BASE TO MAIN TECHNOLOGY ROOM (104), FOR DATA/FIBER TO CAMERAS. COORDINATE REQUIREMENTS WITH OWNER. CABLING/CAMERAS FURNISHED BY OWNER, INSTALLED/WIRED BY E.C. DIRECT BURIED CONDUITS, REFER TO DETAIL, SHEET E0.3.
2. PROVIDE TWO DEDICATED CIRCUITS TO STORAGE SHED. 1 FOR LIGHTING (EXTERNAL LIGHT WITH INTEGRAL PHOTOCELL, TWO BARE LAMP HOLDERS, WITH LED 'A' LAMPS IN SHED, SWITCHED AT DOORWAY). 1 FOR CONVENIENCE RECEPTACLE IN SHED, ADJACENT TO DOORWAY (GFCI).
3. PROVIDE #8 AWG CONDUCTORS IN 1.25"c. TO ACCOMMODATE VOLTAGE DROP.
4. PROVIDE 1.25" POWER CONDUIT AND TWO 1"c. FOR START SIGNAL WIRING AND REMOTE ANNUNCIATOR WIRING FROM GENERATOR TO MAIN TECHNOLOGY ROOM (104) A.T.S.
5. CONCRETE ENCASED SECONDARY SERVICE ENTRANCE CONDUITS.
6. TELECOM SERVICE ENTRANCE CONDUITS FROM RISER POLE/PEDESTAL TO UTILITY ENTRANCE ROOM (700) AT BACKBOARD. COORDINATE UTILITY ENTRANCE LOCATION WITH OWNER.
7. PROVIDE FLUSH POLE BASE, PER DETAIL , SHEET E0.3.
8. PROVIDE RAISED POLE BASE, PER DETAIL, SHEET E0.3
9. COORDINATE REQUIREMENTS FOR WATER SERVICE PIT WITH SITE CONTRACTOR. PROVIDE 120V CIRCUIT(S) FOR SUMP PUMP, ETC. PROVIDE FIRE ALARM MONITORING OF WATER/FIRE SERVICE VALVE(S) IF REQUIRED.

SITE PLAN

0 20 40 80 120 160 200

SCALE: 1"=40'-0"

NAUMAN & ZELINSKI LLC.
204 S. Ludlow Street Suite 400 Dayton, Ohio 45402
Phone: (937) 223-3821 ~ Fax: (937) 223-3848

App Architecture
creative focused design
615 Woodside Drive, Englewood, Ohio 45322
T 937.836.8898 F 937.832.3696
www.app-arch.com

STATE OF OHIO
JEFFREY D. ZELINSKI
63822
REGISTERED
PROFESSIONAL ENGINEER

MIAMI COUNTY ONE STOP CENTER
BOARD OF COMMISSIONERS FOR MIAMI COUNTY, OHIO
BARNHART ROAD, TROY, OHIO 45373

ISSUE

NO.	DATE	DESCRIPTION
1	04/08/2022	FOR CONSTRUCTION

DATE	04/08/22
JOB NO.	3923.00
DRAWN	TR
CHECKED	JDZ

COPYRIGHT © 2022 - App Architecture, Inc.

TITLE
SITE PLAN

SHEET NO.
E1.1

4/8/2022 1:33:31 PM

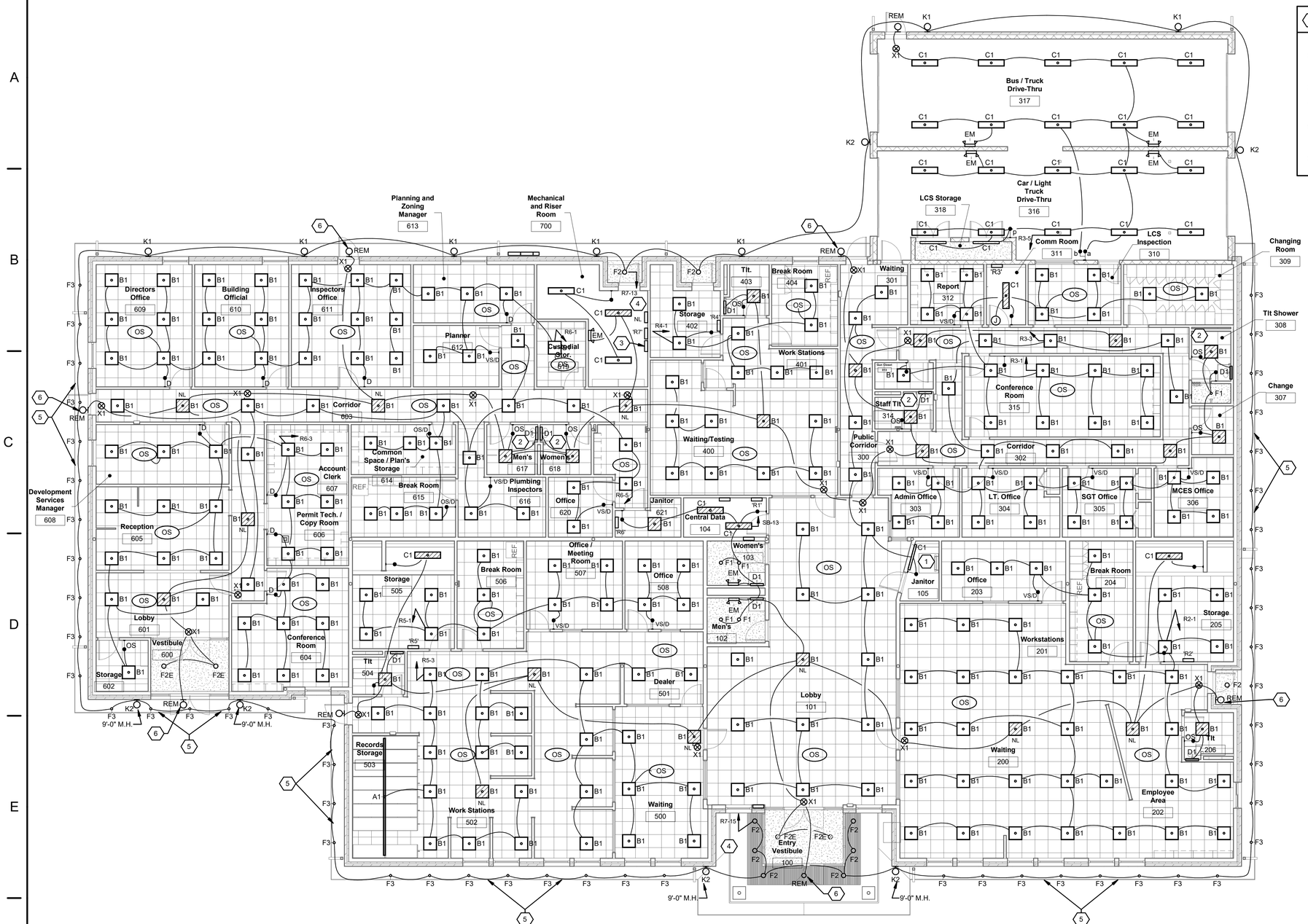

FIRST FLOOR CEILING PLAN

0 4 8 16 24 32 40

SCALE: 1/8"=1'-0"

N

CONSTRUCTION NOTES

1. WALL MOUNT FIXTURE ABOVE DOOR
2. OCCUPANCY SENSORS SHALL BE WIRED TO CONTROL RELAY TO CONTROL TOILET ROOM EXHAUST FAN FROM EITHER RESTROOM LIGHTING CONTROL
3. EXTERIOR LIGHTING CONTACTOR.
4. CIRCUIT EXTERIOR LIGHTING THRU EXTERIOR LIGHTING CONTACTOR (ROOM 700).
5. ADJUSTABLE DOWNLIGHTS FLUSH MOUNTED IN ROOF EAVE. AIM TO WASH FACADE EVENLY. COORDINATE FIXTURE SPACING WITH ROOF TRUSS SPACING.
6. EMERGENCY EGRESS REMOTE LAMP HEAD MOUNTED TO BOTTOM OF ROOF EAVE.

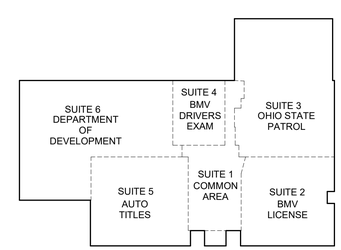

SUITE KEY PLAN

NAUMAN & ZELINSKI LLC.
204 S. Ludlow Street Suite 400 Dayton, Ohio 45402
Phone: (937) 223-3821 – Fax: (937) 223-3948

App Architecture
creative focused design
615 Woodside Drive, Englewood, Ohio 45322
T 937.836.8898 F 937.832.3696
www.app-arch.com

STATE OF OHIO
JEFFREY D. ZELINSKI
63822
REGISTERED
PROFESSIONAL ENGINEER

MIAMI COUNTY ONE STOP CENTER
BOARD OF COMMISSIONERS FOR MIAMI COUNTY, OHIO
BARNHART ROAD, TROY, OHIO 45373

ISSUE

NO.	DATE	DESCRIPTION
1	04/08/2022	FOR CONSTRUCTION

DATE	04/08/22
JOB NO.	3923.00
DRAWN	TR
CHECKED	JDZ

COPYRIGHT © 2022 - App Architecture, Inc.

TITLE
LIGHTING PLAN

SHEET NO.
E2.1

4/8/2022 1:33:34 PM

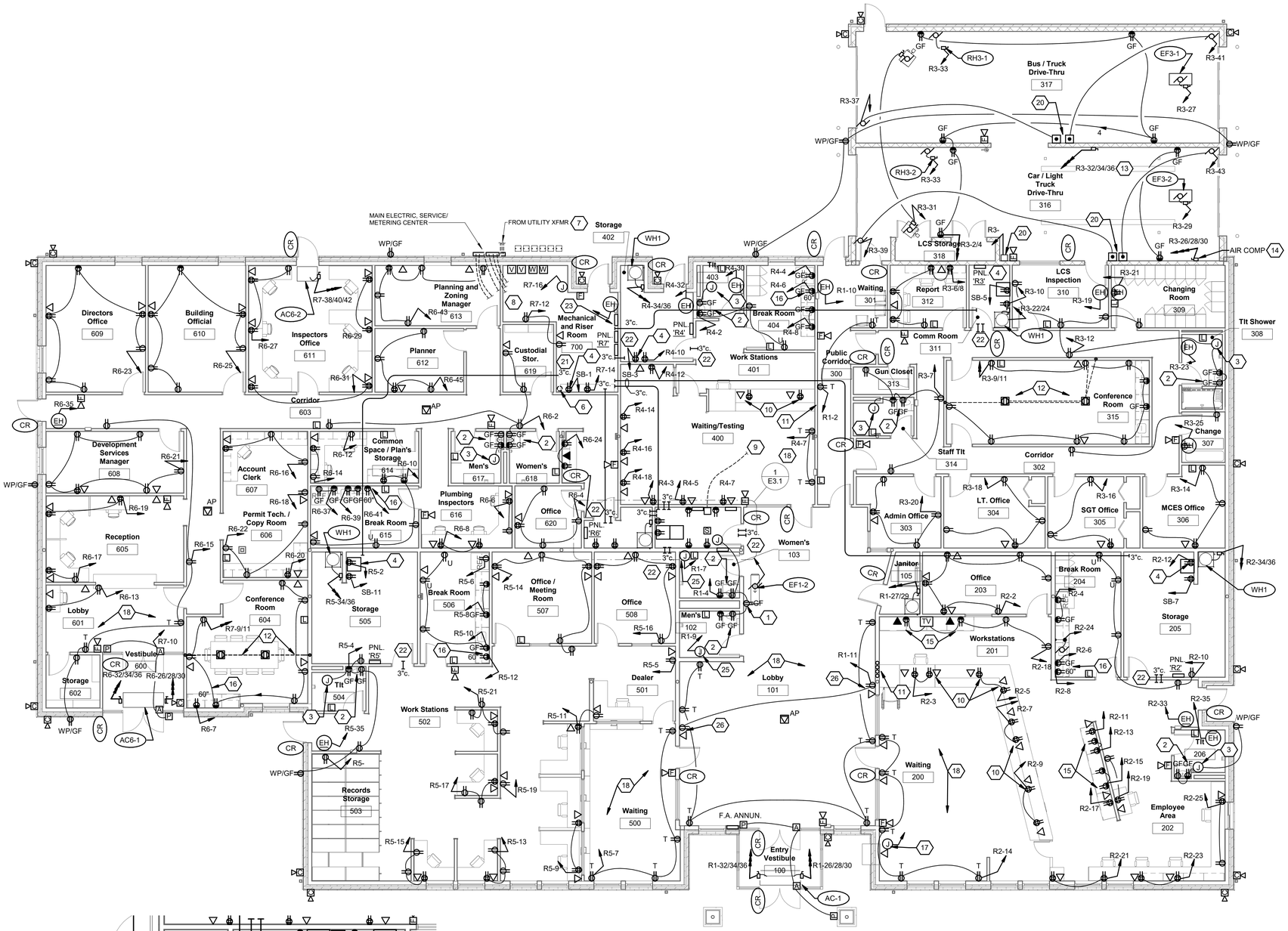

FIRST FLOOR POWER PLAN

0 4 8 16 24 32 40

SCALE: 1/8"=1'-0"

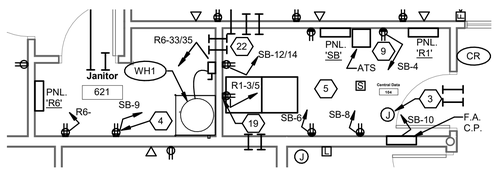

FIRST FLOOR ENLARGED PLAN

0 2 4 8 12 16 20

SCALE: 1/4"=1'-0"

CONSTRUCTION NOTES

1. COORDINATE RECEPTACLE MOUNTING HEIGHT LOCATION FOR WATER COOLER WITH P.C.
2. LOCATE RECEPTACLE BELOW SINK FOR ELECTRONIC FAUCET. COORDINATE LOCATION WITH P.C.
3. LOCATE 120V POWER SUPPLY (TOGGLE TYPE DISCONNECT) FOR FLUSH VALVE POWER SUPPLY ABOVE ACCESSIBLE CEILING (OR ADJACENT ROOM WITH EXPOSED STRUCTURE). COORDINATE REQUIREMENTS WITH P.C.
4. PROVIDE 4'x8'X3/4" PLYWOOD BACKBOARD FOR TECHNOLOGY RACK (FIRE RETARDANT). PAINT WITH FIRE RETARDANT WHITE PAINT. SURFACE MOUNT NORMAL AND STAND BY POWER RECEPTACLE ON BACKBOARD.
5. PROVIDE 3/4" PLYWOOD BACKBOARD ON THREE WALLS OF CENTRAL DATA ROOM. (12"A.F.F TO 9' A.F.F.. SURFACE MOUNT ALL RECEPTACLES ON BACKBOARD. ALL CIRCUITS FED FROM STANDBY PANEL EXCEPT FOR ONE RECEPTACLE AT DATA RACK. COORDINATE LOCATIONS WITH OWNER. PROVIDE GROUND BAR WITH #6 AWG. GROUND BAR TO GROUND BAR IN ROOM 700.
6. 3" SERVICE ENTRANCE DATA CONDUIT FROM RISER POLE / PEDESTAL AT ROAD. COORDINATE LOCATION WITH UTILITY/OWNER. PROVIDE PLYWOOD BACKBOARD ON WALL FOR SERVICE DEMARK. PROVIDE GROUND BAR BONDED TO SERVICE GROUND.
7. UNDER SERVICE ENTRANCE CONDUCTORS FROM UTILITY TRANSFORMER TO MAIN SERVICE METERING CENTER. REFER TO SITE PLAN.
8. UNDERGROUND SECONDARY SERVICE FEEDERS TO TENANT PANELS.
9. UNDERGROUND FEEDER AND GENERATOR START/ANNUNCIATOR CIRCUITS TO STANDBY GENERATOR. REFER TO SITE PLAN.
10. PROVIDE 3 DUPLEX RECEPTACLES IN 3-GANG BOX WITH COMMON COVERPLATE BELOW EACH WORK STATION, FLUSH MOUNTED IN CASEWORK. PROVIDE DATA ROUGH-IN ADJACENT TO EACH. ROUTE POWER/DATA CONDUITS THRU CASEWORK TO WALL FOR OVERHEAD ROUTING.
11. CONDUITS FOR POWER/DATA TO WORK STATION CASEWORK. STUB DATA CONDUITS (1" EACH) ABOVE ACCESSIBLE CEILING.
12. PROVIDE 1" DATA CONDUIT BETWEEN FLUSH FLOOR BOXES AND STUBBED UP ABOVE CEILING OF CONFERENCE ROOM.
13. COORDINATE POWER CONNECTION REQUIREMENTS FOR VEHICLE LIFT WITH OWNER. OWNER FURNISHED/INSTALLED, WIRED BY E.C. PROVIDE FUSED DISCONNECT. COORDINATE FUSING WITH EQUIPMENT SUPPLIER.
14. COORDINATE POWER CONNECTION/LOCATION FOR OWNER FURNISHED AIR COMPRESSOR. PROVIDE FUSED DISCONNECT. COORDINATE FUSING PER EQUIPMENT MANUFACTURER.
15. COORDINATE POWER/DATA/ ROUGH-INS WITH CASEWORK ELEVATIONS, DEVICES MOUNTED ABOVE CASEWORK.
16. COORDINATE RECEPTACLE MOUNTING HEIGHT WITH CASEWORK FOR MICROWAVE SHELF.
17. COORDINATE POWER CONNECTION TO EXPRESS KIOSK WITH OWNER/EQUIPMENT SUPPLIER. COORDINATE ROUGH-IN REQUIREMENTS FOR DATA CONNECTION TO KIOSK.
18. CONVENIENCE RECEPTACLES IN PUBLIC LOBBY/ WAITING AREAS SHALL BE TAMPER-RESISTANT/GFCI TYPE.
19. PROVIDE NEMA L6-20R RECEPTACLE FOR RACK UPS. COORDINATE LOCATIONS WITH OWNER.
20. COORDINATE DOOR OPENER CONTROL STATION WITH OWNER AND EQUIPMENT SUPPLIER.
21. PROVIDE 3"c. FROM MAIN TELECOM SERVICE DEMARK BACKBOARD IN RISER ROOM (700) TO EACH TENANT SUITE DATA/SERVER RACK LOCATION. COORDINATE ROUTING WITH OTHER TRADES. PROVIDE NYLON PULL STRING.
22. PROVIDE 3"C. SLEEVES ABOVE ACCESSIBLE CEILING FOR TECHNOLOGY CABLING.
23. PROVIDE 8-POLE LIGHTING CONTACTOR FOR EXTERIOR SITE/POLE LIGHTING. PHOTOCELL ON/OFF CONTROL.
24. PROVIDE POWER TO CO/NOX ALARM PANEL / CONTROLLER.
25. PROVIDE 120V POWER ROUGH-IN FOR HAND DRYER. COORDINATE LOCATION WITH ARCHITECT.
26. RECEPTACLE/DATA ROUGH-IN FOR OWNER SIGNAGE/MONITOR. MOUNT DEVICES ABOVE DOOR FRAME/WINDOW HEIGHT. COORDINATE LOCATION WITH ARCHITECT/OWNER.

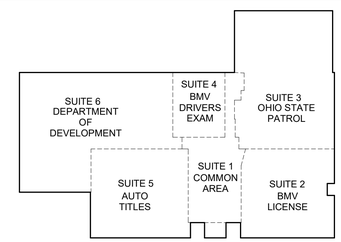

SUITE KEY PLAN

NAUMAN & ZELINSKI LLC.
204 S. Ludlow Street Suite 400 Dayton, Ohio 45402
Phone: (937) 223-3621 - Fax: (937) 223-3949

App Architecture
creative focused design
615 Woodside Drive, Englewood, Ohio 45322
T 937.836.8898 F 937.832.3696
www.app-arch.com

STATE OF OHIO
JEFFREY D. ZELINSKI
63822
REGISTERED
PROFESSIONAL ENGINEER

MIAMI COUNTY ONE STOP CENTER
BOARD OF COMMISSIONERS FOR MIAMI COUNTY, OHIO
BARNHART ROAD, TROY, OHIO 45373

ISSUE

NO.	DATE	DESCRIPTION
1	04/08/2022	FOR CONSTRUCTION

DATE	04/08/22
JOB NO.	3923.00
DRAWN	TR
CHECKED	JDZ

COPYRIGHT © 2022 - App Architecture, Inc.

TITLE
POWER AND SYSTEMS PLAN

SHEET NO.
E3.1

4/8/2022 3:33:36 PM

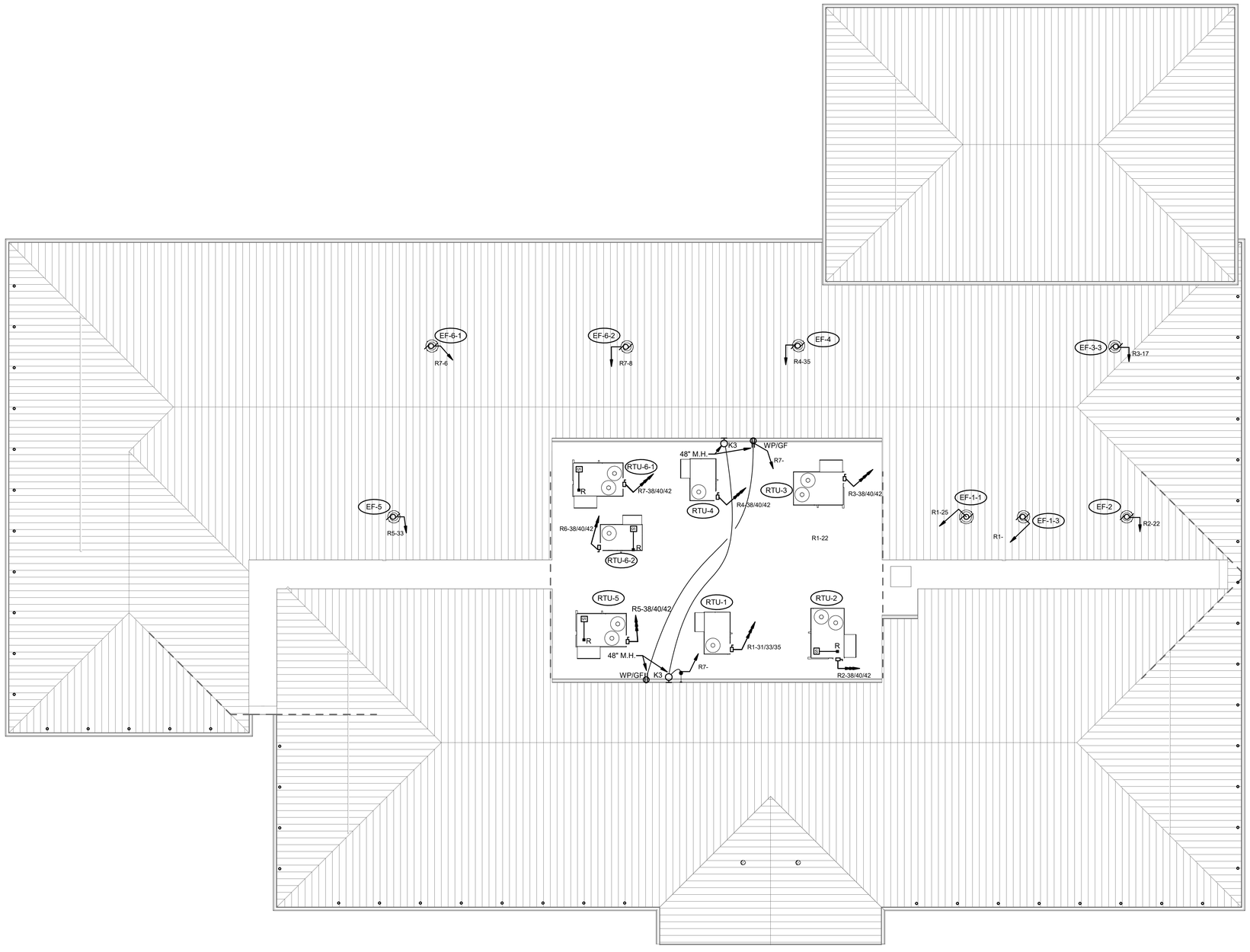

ROOF PLAN

0 4 8 16 24 32 40

SCALE: 1/8"=1'-0"

N

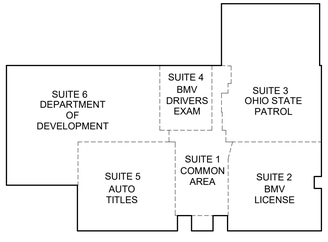

SUITE KEY PLAN

NAUMAN & ZELINSKI LLC.
204 S. Ludlow Street Suite 400 Dayton, Ohio 45402
Phone: (937) 223-3821 - Fax: (937) 223-3849

App Architecture
creative focused design
615 Woodside Drive, Englewood, Ohio 45322
T 937.836.8898 F 937.832.3696
www.app-arch.com

STATE OF OHIO
JEFFREY D. ZELINSKI
63822
REGISTERED
PROFESSIONAL ENGINEER

MIAMI COUNTY ONE STOP CENTER
BOARD OF COMMISSIONERS FOR MIAMI COUNTY, OHIO
BARNHART ROAD, TROY, OHIO 45373

ISSUE

NO.	DATE	DESCRIPTION
1	04/08/2022	FOR CONSTRUCTION

DATE	04/08/22
JOB NO.	3923.00
DRAWN	TR
CHECKED	JDZ

COPYRIGHT © 2022 - App Architecture, Inc.

TITLE
POWER ROOF PLAN

SHEET NO.
E3.2

4/8/2022 1:33:39 PM